1A DROPOUT POSITIVE ADJUSTABLE OR FIXED-MODE REGULATOR

Description

AP1117 is a low dropout positive adjustable or fixed-mode regulator with 1A output current capability. The product is voltage specifically designed to provide well-regulated supply for low IC applications such as high-speed bus termination and low current 3.3V logic supply. AP1117 is also well suited for other applications such as VGA cards. AP1117 is guaranteed to have lower than 1.4V dropout at full load current making it ideal to provide well-regulated outputs of 1.25 to 5.0 with 6.4V to 18V input supply. AP1117 is available both in commercial temperature grade (AP1117) and in industrial temperature range (AP1117I) (SOT223).

Pin Assignments

SOT223

(Top View)

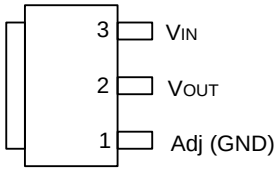

Tab is VOUT

Features

- 1.4V Maximum Dropout at Full Load Current
- Fast Transient Response
- Output Current Limiting
- Built-in Thermal Shutdown
- Good Noise Rejection
- 3-Terminal Adjustable or Fixed 1.5V, 1.8V,2.5V, 3.3V, 5.0V
- Operating Junction Temperature range
  - 0°C ≤ T_J ≤ +125°C (All packages)
  - -20°C ≤ T_J ≤ +125°C (see ordering information)
  - -40°C ≤ T_J ≤ +125°C (see ordering information)
- Lead-Free Packages: SOT223,
  - **Totally Lead-Free; RoHS Compliant (Notes 1 & 2)**
- SOT223,: Available in “Green” Molding Compound (No Br, Sb)
  - **Halogen and Antimony Free. “Green” Device (Note 3)**

Applications

- PC Peripheral
- Communication
- Consumer Equipment

Notes:
1. No purposely added lead. Fully EU Directive 2002/95/EC (RoHS) & 2011/65/EU (RoHS 2) compliant.
2. See http://www.diodes.com quality/lead_free.html for more information about Diodes Incorporated’s definitions of Halogen and Antimony free, "Green" and Lead-Free.
3. Halogen and Antimony free "Green” products are defined as those which contain <900ppm bromine, <900ppm chlorine (<1500ppm total Br + Cl) and <1000ppm antimony compounds.

Typical Applications Circuit

© Diodes Incorporated

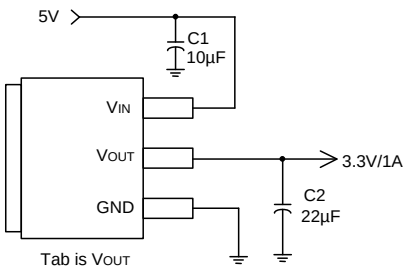

(5V/3.3V fixed output)

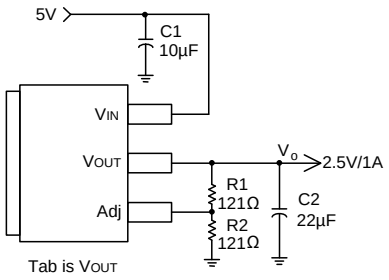

(5V/2.5V ADJ output)

Note: $V_o = V_{REF} \times (1 + \frac{R_2}{R_1})$

Pin Descriptions

Pin Number	I/O	Pin Name	Function
1	I	Adj (GND)	A resistor divider from this pin to the V_{OUT} pin and ground sets the output voltage (Ground only for Fixed-Mode).
2	O	V_{OUT}	The output of the regulator. A minimum of 4.7µF capacitor (0.15Ω ≤ ESR ≤ 0.5Ω) must be connected from this pin to ground to insure stability.
3	I	V_{IN}	The input pin of regulator. Typically a large storage capacitor is connected from this pin to ground to insure that the input voltage does not sag below the minimum dropout voltage during the load transient response. This pin must always be 1.3V higher than V_{OUT} in order for the device to regulate properly. A minimum of 4.7µF capacitor (0.15Ω ≤ ESR ≤0.5Ω) must be connected from this pin to ground to insure stability.

Functional Block Diagram

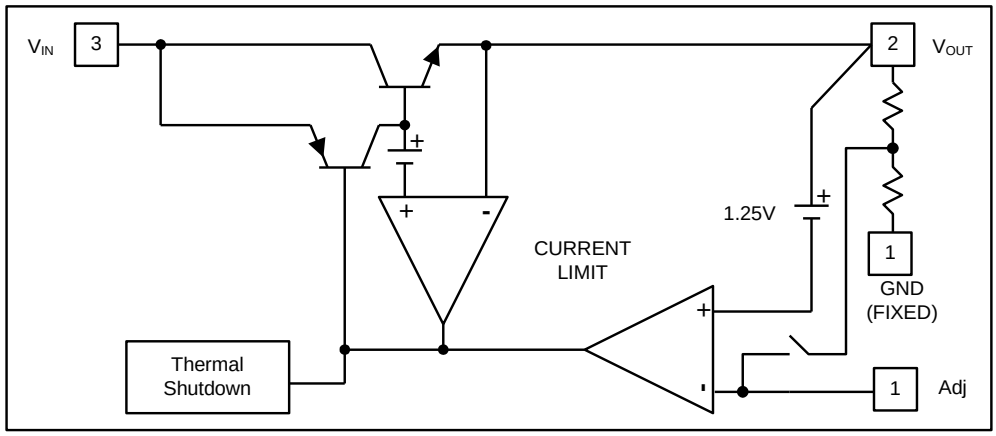

Absolute Maximum Ratings (@T_A = +25°C, unless otherwise specified.)

Symbol	Parameter	Rating	Unit

© Diodes Incorporated

V_{IN}	DC Supply Voltage	-0.3 to +18	V
T_{MJ}	Maximum Junction Temperature	+150	°C
P_D	Power Dissipation SOT223	Internally limited by maximum junction temperature of +150°C (Note 4)	mW
T_{ST}	Storage Temperature	-65 to +150	°C

Notes: 4. AP1117 contains an internal thermal limiting circuit that is designed to protect the regulator in the event that the maximum junction temperature exceeded. When activated, typically at +150°C, the regulator output switches off and then back on as the die cools.

Recommended Operating Conditions (@T_A = +25°C, unless otherwise specified.)

Symbol	Parameter		Min	Max	Unit
T_{OP}	Operating Junction Temperature Range	AP1117	0	+125	°C
		AP1117I	-40	+125	

Note: 11. 22uF is suggested for C_{in}/C_{out} value when application is required to work under 0℃.

Electrical Characteristics (@T_A = +25°C, unless otherwise specified.)

Parameter	Conditions		Min	Typ	Max	Unit
Reference Voltage	AP1117-ADJ	T_A = +25°C, (V_{IN-OUT}) = 1.5V I_O = 10mA	1.225	1.250	1.275	V
Output Voltage	AP1117-1.5	I_{OUT} = 10mA, T_A = +25°C, 3V ≤ V_{IN} ≤ 12V	1.470	1.500	1.530	V
	AP1117-1.8	I_{OUT} = 10mA, T_A = +25°C, 3.3V ≤ V_{IN} ≤ 12V	1.764	1.800	1.836	V
	AP1117-2.5	I_{OUT} = 10mA, T_A = +25°C, 4V ≤ V_{IN} ≤ 12V	2.450	2.500	2.550	V
	AP1117-3.3	I_{OUT} = 10mA, T_A = +25°C, 4.8V ≤ V_{IN} ≤ 12V	3.235	3.300	3.365	V
	AP1117-5.0	I_{OUT} = 10mA, T_A = +25°C, 6.5V ≤ V_{IN} ≤ 12V	4.900	5.000	5.100	V
Line Regulation	AP1117-XXX	I_O = 10mA,V_{OUT} +1.5V < V_{IN} < 12V, T_A = 25°C	—	—	0.2	%
Load Regulation	AP1117-ADJ	V_{IN} = 3.3V,V_{ADJ} = 0, 0mA < I_O < 1A, T_A = +25°C (Notes 5, 6)	—	—	1	%
	AP1117-1.5	V_{IN} = 3V, 0mA < I_O < 1A, T_A = +25°C (Notes 5, 6)	—	12	15	mV
	AP1117-1.8	V_{IN} = 3.3V, 0mA < I_O < 1A, T_A = +25°C (Notes 5, 6)	—	15	18	mV
	AP1117-2.5	V_{IN} = 4V, 0mA < I_O < 1A, T_A = +25°C (Notes 5, 6)	—	20	25	mV

Notes: 5. See thermal regulation specifications for changes in output voltage due to heating effects. Line and load regulation are measured at a constant junction temperature by low duty cycle pulse testing. Load regulation is measured at the output lead = 1/18" from the package.
6. Line and load regulation are guaranteed up to the maximum power dissipation of 15W. Power dissipation is determined by the difference between input and output differential and the output current. Guaranteed maximum power dissipation will not be available over the full input/output range.

Electrical Characteristics (cont.) (@T_A = +25°C, unless otherwise specified.)

Parameter	Conditions		Min	Typ	Max	Unit
Load Regulation (cont.)	AP1117-3.3	V_{IN} = 5V, 0 ≤ I_{OUT} ≤ 1A, T_A = +25°C (Notes 5, 6)	—	26	33	mV

© Diodes Incorporated

	AP1117-5.0	V_{IN} = 8V, 0 ≤ I_{OUT} ≤ 1A, T_A = +25°C (Notes 5, 6)		—	40	50	mV
Dropout Voltage (V_{IN}-V_{OUT})	AP1117-ADJ/1.5/1.8 2.5/3.3/5.0	I_{OUT} = 800mA, ΔV_{OUT} = 1% V_{OUT} 0°C ≤ T_J ≤ +125°C		—	1.2	1.3	V
Dropout Voltage (V_{IN}-V_{OUT})	AP1117-ADJ/1.5/1.8 2.5/3.3/5.0	I_{OUT} = 1A, ΔV_{OUT} = 1% V_{OUT}	0°C ≤ T_J ≤ +125°C	—	1.3	1.4	V
	AP1117I-ADJ/1.5/1.8 2.5/3.3/5.0		-40°C ≤ T_J ≤ +125°C				
Current Limit	AP1117-ADJ/1.5/1.8 2.5/3.3/5.0	(V_{IN}-V_{OUT}) = 5V		1. 1	—	—	A
Minimum Load Current (Note 7)	AP1117-XXX	0°C ≤ T_J ≤ +125°C		—	5	10	mA
Thermal Regulation	T_A = +25°C, 30ms pulse			—	0.008	0.040	%/W
Ripple Rejection	F = 180Hz, C_{OUT} = 25µF Tantalum, I_{OUT} = 1A			—	—	—	—
	AP1117-XXX	V_{IN} = V_{OUT} +3V		—	60	70	dB
Temperature Stability	I_O = 10mA			—	0.5	—	%
θ_{JA} Thermal Resistance Junction-to-Ambient θ_{JA}	SOT223: Control Circuitry/Power Transistor (Note 9)			— — — — —	107	— — — — —	°C/W
θ_{JC} Thermal Resistance Junction-to-Case	SOT223: Control Circuitry/Power Transistor (Note 9)			— — — — —	15	— — — — —	°C/W

Notes: 7. Quiescent current is defined as the minimum output current required in maintaining regulation. At 12V input/output differential the device is guaranteed to regulate if the output current is greater than 10mA.

9. Test conditions for SOT223: Devices mounted on FR-4 substrate, single sided PC board, 2oz copper, with 5mm x 5mm thermal pad layout, no air flow. The case point of θ_{JC} is located on the thermal tab.

Typical Performance Characteristics

© Diodes Incorporated

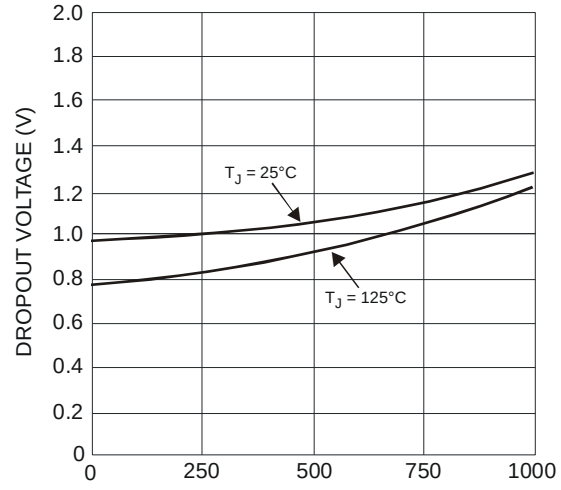

Dropout Voltage vs. Output Current

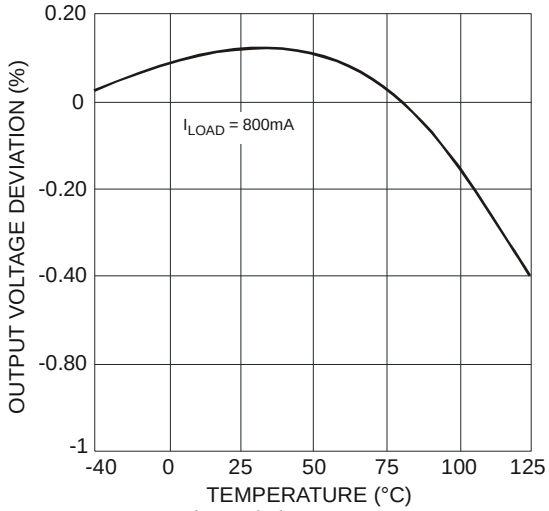

Load Regulation vs. Temperature

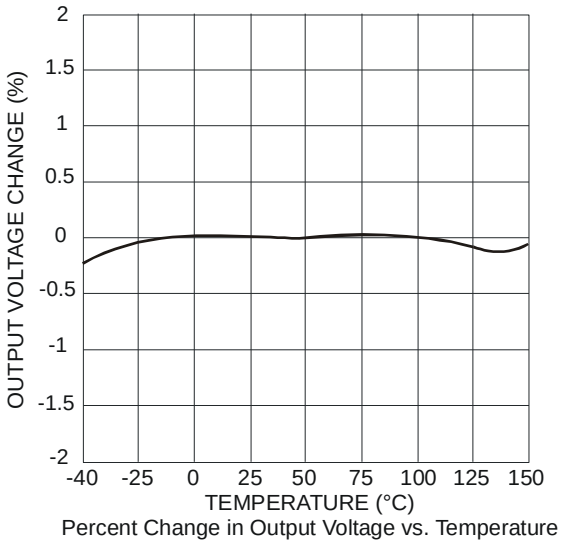

Percent Change in Output Voltage vs. Temperature

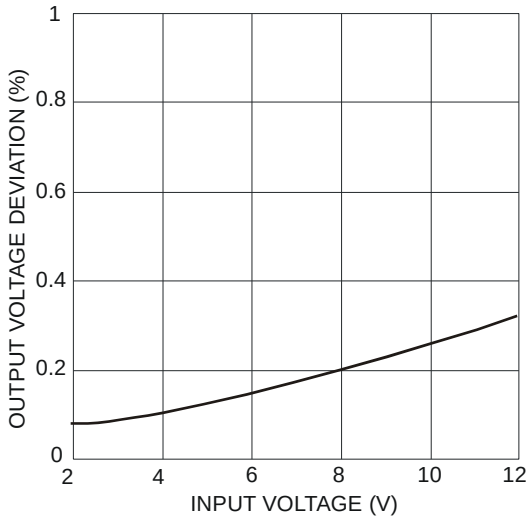

Line Regulation

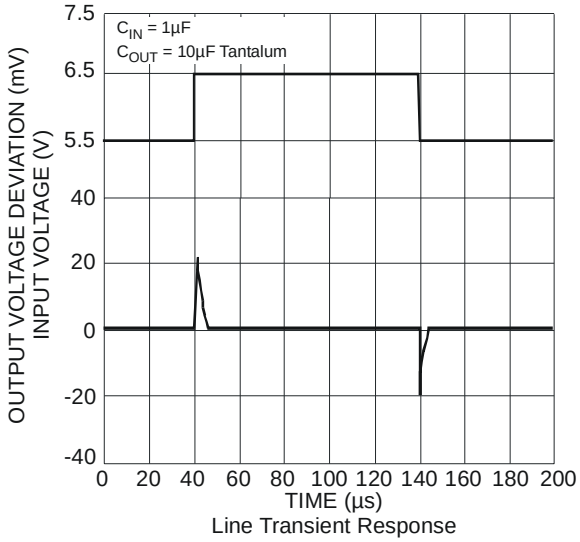

Line Transient Response

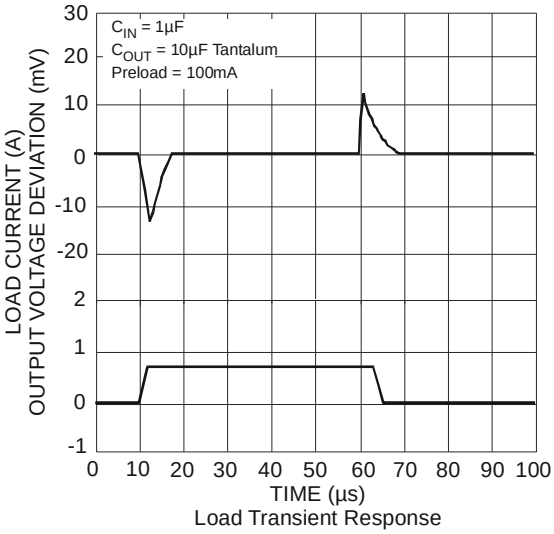

Load Transient Response

Application Information

© Diodes Incorporated

Load Regulation

For improved load regulation the AP1117-ADJ should have the upper feedback resistor, R1, connected as close as possible to V_{OUT} and the lower resistor, R2, connected as close as possible to the load GND return. This helps reduce any parasitic resistance in series with the load.

Stability and Decoupling Capacitors

Input Capacitors

To ensure stable operation, the input supply must be low impedance up to a frequency of a few MHz. This requires a closely placed input decoupling capacitor of 4.7µF minimum. This can be either ceramic or solid tantalum. The ESR of this capacitor must be less than 0.5Ω.

Output Capacitor

The AP1117 also requires a closely placed output capacitor as part of the device frequency compensation. As part of its improved performance over industry standard 1117, the AP1117 is suitable for use with MLCC (Multi-Layer Ceramic Chip) capacitors. A minimum output capacitor of 4.7µF ceramic X7R or 4.7µF solid tantalum is required. Aluminum electrolytic can be used but a minimum of 47µF is required. When using Aluminum electrolytic it is still recommended to also use a 1µF MLCC in parallel. The ESR of the output capacitors must be less than 0.5Ω.

The AP1117 is stable when using the correct value of MLCC capacitors. When using MLCC capacitors X7R dielectric is recommended. Do not use Y5V dielectrics.

Capacitor Track Length

Both input and output capacitors must be placed close to the AP1117. PCB traces not longer than 10mm are recommended between the AP1117 and the capacitors.

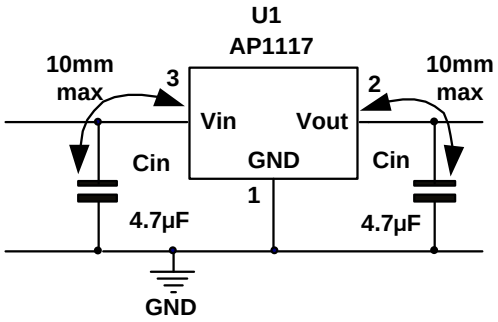

Thermal Considerations

Thermal protection circuitry will shut down the regulator should the junction temperature exceed typically +150°C at the sense point.

The AP1117 is pin compatible with similar '1117 regulators and offers extended temperature range and improved regulation specifications.

AP1117 series regulators have internal thermal limiting circuitry designed to protect the device during overload conditions. For continuous normal load conditions however, the maximum junction temperature rating of +125°C must not be exceeded.

It is important to give careful consideration to all sources of thermal resistance from junction to ambient. For the SOT223 and TO252 packages, which are designed to be surface mounted, additional heat sources mounted near the device must also be considered. Heat sinking is accomplished using the heat spreading capability of the PCB and its copper traces. The θ_{JC} (junction to tab) of the TO252 and SOT223 are +12°C/W and +15°C/W respectively.

Thermal resistances from tab to ambient can be as low as 30°C/W. The total thermal resistance from junction to ambient (θ_{JA}) can be as low as +42 ~ +46°C/W. This requires a reasonable sized PCB with at least one layer of copper to spread the heat across the board and couple it into the surrounding air. Datasheet specifications using 2 oz copper and a 5mm x 5mm pad with T_A = +27°C, no air flow yielded θ_{JA} (junction to tab) of +73°C/W and +107°C/W for TO252 and SOT223 respectively.

The thermal resistance for each application will be affected by thermal interactions with other components on the board. Some experimentation will be necessary to determine the actual value. See graphs of power dissipation and thermal pictures of different size PCB copper area for guidance.

© Diodes Incorporated

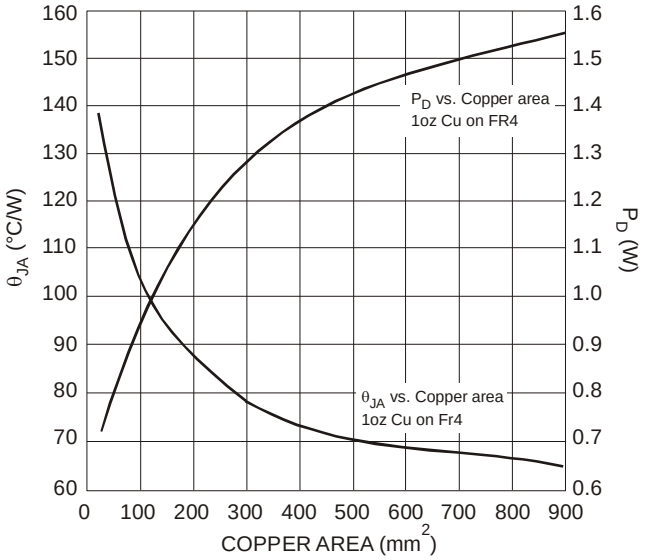

Ordering Information

AP1117 X XXXXX

Temperature	Package	V_{OUT}	Lead Free	Packing
Blank : Commercial I : Industrial	E : SOT223	Blank : ADJ 15 : 1.5V 18 : 1.8V 25 : 2.5V 33 : 3.3V 50 : 50V	L : Lead Free G : Green	U : Tube 13 : Tape & Reel

Device	Junction Temperature Range	Package Code	Packaging (Note 10)	Tube		13" Tape and Reel	
				Quantity	Part Number Suffix	Quantity	Part Number Suffix
							-
AP1117EXXL-13	0 to +125°C	E	SOT223	NA	NA	2500/Tape & Reel	-13
AP1117EXXG-13	-20 to +125°C	E	SOT223	NA	NA	2500/Tape & Reel	-13
AP1117IEXXG-13	-40 to +125°C	E	SOT223	NA	NA	2500/Tape & Reel	-13

Notes: 10. Pad layout as shown on Diodes Inc. suggested pad layout document AP02001, which can be found on our website at http://www.diodes.com/datasheets/ap02001.pdf.

Note: 11. 22uF is suggested for C_{in}/C_{out} value when application is required to work under 0℃.

© Diodes Incorporated

Marking Information

(1) SOT223

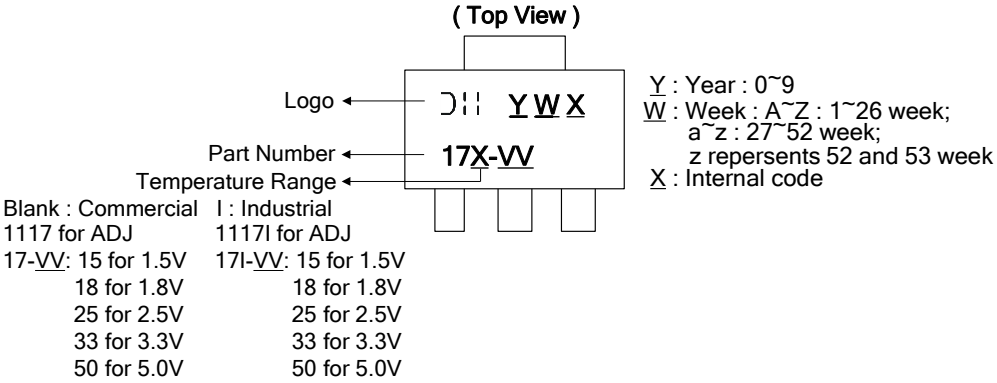

Package Outline Dimensions (All dimensions in mm.)

(1) Package Type: SOT223

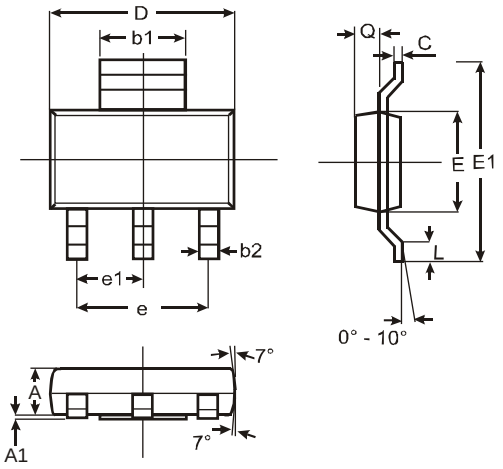

SOT223			
Dim	**Min**	**Max**	**Typ**
A	1.55	1.65	1.60
A1	0.010	0.15	0.05
b1	2.90	3.10	3.00
b2	0.60	0.80	0.70
C	0.20	0.30	0.25
D	6.45	6.55	6.50
E	3.45	3.55	3.50
E1	6.90	7.10	7.00
e	—	—	4.60
e1	—	—	2.30
L	0.85	1.05	0.95
Q	0.84	0.94	0.89
All Dimensions in mm			

Package Outline Dimensions (cont.) (All dimensions in mm.)

© Diodes Incorporated

Suggested Pad Layout

(1) Package Type: SOT223

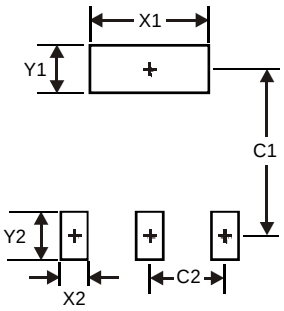

Dimensions	Value (in mm)
X1	3.3
X2	1.2
Y1	1.6
Y2	1.6
C1	6.4
C2	2.3

IMPORTANT NOTICE

DIODES INCORPORATED MAKES NO WARRANTY OF ANY KIND, EXPRESS OR IMPLIED, WITH REGARDS TO THIS DOCUMENT, INCLUDING, BUT NOT LIMITED TO, THE IMPLIED WARRANTIES OF MERCHANTABILITY AND FITNESS FOR A PARTICULAR PURPOSE (AND THEIR EQUIVALENTS UNDER THE LAWS OF ANY JURISDICTION).

Diodes Incorporated and its subsidiaries reserve the right to make modifications, enhancements, improvements, corrections or other changes without further notice to this document and any product described herein. Diodes Incorporated does not assume any liability arising out of the application or use of this document or any product described herein; neither does Diodes Incorporated convey any license under its patent or trademark rights, nor the rights of others. Any Customer or user of this document or products described herein in such applications shall assume all risks of such use and will agree to hold Diodes Incorporated and all the companies whose products are represented on Diodes Incorporated website, harmless against all damages.

Diodes Incorporated does not warrant or accept any liability whatsoever in respect of any products purchased through unauthorized sales channel. Should Customers purchase or use Diodes Incorporated products for any unintended or unauthorized application, Customers shall indemnify and hold Diodes Incorporated and its representatives harmless against all claims, damages, expenses, and attorney fees arising out of, directly or indirectly, any claim of personal injury or death associated with such unintended or unauthorized application.

Products described herein may be covered by one or more United States, international or foreign patents pending. Product names and markings noted herein may also be covered by one or more United States, international or foreign trademarks.

This document is written in English but may be translated into multiple languages for reference. Only the English version of this document is the final and determinative format released by Diodes Incorporated.

LIFE SUPPORT

Diodes Incorporated products are specifically not authorized for use as critical components in life support devices or systems without the express written approval of the Chief Executive Officer of Diodes Incorporated. As used herein:

A. Life support devices or systems are devices or systems which:

1. are intended to implant into the body, or

2. support or sustain life and whose failure to perform when properly used in accordance with instructions for use provided in the labeling can be reasonably expected to result in significant injury to the user.

B. A critical component is any component in a life support device or system whose failure to perform can be reasonably expected to cause the failure of the life support device or to affect its safety or effectiveness.

Customers represent that they have all necessary expertise in the safety and regulatory ramifications of their life support devices or systems, and acknowledge and agree that they are solely responsible for all legal, regulatory and safety-related requirements concerning their products and any use of Diodes Incorporated products in such safety-critical, life support devices or systems, notwithstanding any devices- or systems-related information or support that may be provided by Diodes Incorporated. Further, Customers must fully indemnify Diodes Incorporated and its representatives against any damages arising out of the use of Diodes Incorporated products in such safety-critical, life support devices or systems.

Copyright © 2013, Diodes Incorporated

© Diodes Incorporated

ENTEGRECİ

Bu belge www.entegreci.com üzerinden sunulmaktadır.

Elektronik komponent tedarikinde Entegreci

Entegreci, Eskişehir merkezli, Türkiye geneline satış yapan bir elektronik komponent mağazasıdır. Entegreler (IC), mikrodenetleyiciler, transistörler, diyotlar, pasif elemanlar, konnektörler, modüller ve geliştirme kartları tek adetten seri üretim adetlerine kadar satılır. Ürün sayfalarında güncel stok durumunu, fiyatı ve datasheet bağlantısını bulabilirsiniz.

Parça koduyla arama

Üretici parça numarasını yazın; stok ve fiyatı hemen görün.

www.entegreci.com

Ürün kategorileri

Entegreden kapasitöre tüm elektronik komponent kategorileri.

Kategorilere göz atın

Üreticiler

Aradığınız üreticinin ürünlerini tek sayfada inceleyin.

Üreticileri görün

Toplu alım ve teklif

Listede olmayan ya da yüksek adetli parçalar için teklif isteyin.

Teklif isteyin

www.entegreci.com | **destek@entegreci.com** | **0850 305 90 34**

Entegreci is an online electronic components store based in Türkiye. Search by manufacturer part number to see stock, prices and datasheets for integrated circuits, microcontrollers, transistors, passive components and connectors, or request a quote for parts that are not listed.

Bu sayfa Entegreci tarafından eklenmiştir. Belgenin önceki sayfaları asıl yayıncısına aittir ve içeriği değiştirilmemiştir; en güncel sürüm için belgenin yayıncısına başvurun.