ALPHA & OMEGA SEMICONDUCTOR

AOZ7203AV

Zero Bridge Loss AlphaZBL™ Controller

General Description

The AOZ7203AV is a Zero Bridge Loss AlphaZBL™ Controller that controls the two external N-channel MOSFETs to replace two low-side diodes when used in AC/DC diode-bridge application. The AOZ7203AV can help the power supply to reduce power consumption and heat dissipation, and can make it easier to reach the titanium level efficiency and shorten engineering development time.

In diode-bridge application, the AOZ7203AV senses the AC input voltage and reduces the forward conduction loss to the minimum value. The AOZ7203AV is self-powered from the AC line without the need of an extra voltage supply.

The AOZ7203AV is available in a SO8 package.

Features

- Replaces two low side diodes in the bridge rectifier
- Increases efficiency and reduces power consumption
- Self-powered in AC system
- Integrated X-capacitor discharge
- Low IC power consumption
- 1x2 drivers compact design
- Very low external part counts
- Avoid gate signal of two low side MOSFET overlapped

Applications

- High-end adaptors
- Desktops
- Game consoles
- Servers
- Telecom power supplies

Green Product

Typical Application

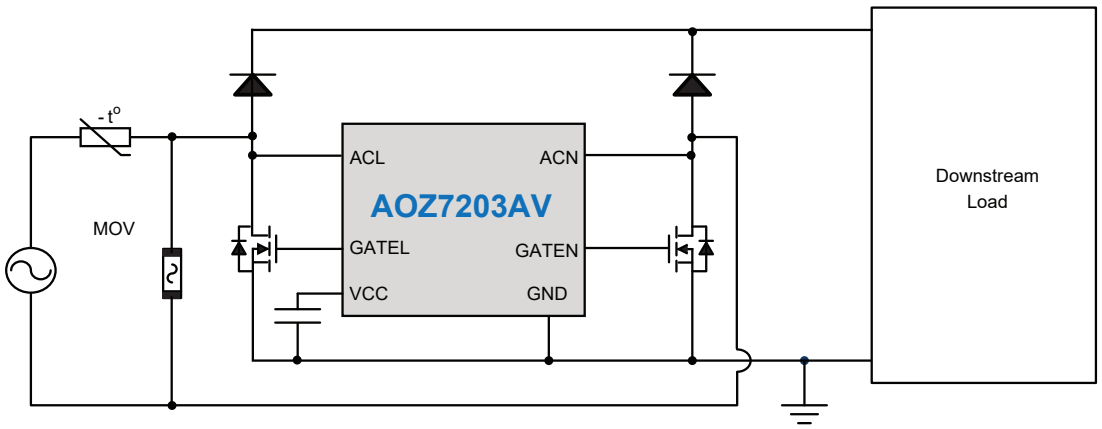

Ordering Information

Part Number	Ambient Temperature Range	Package	Environmental
AOZ7203AV	-40°C to +125°C	SO8	Green Product

AOS products are offered in packages with Pb-free plating and compliant to RoHS standards.
Please visit https://aosmd.com/sites/default/files/media/AOSGreenPolicy.pdf for additional information.

Pin Configuration

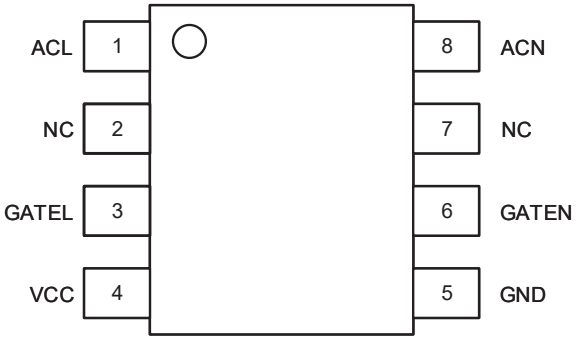

SO8
(Top View)

Pin Description

Pin Number	Pin Name	Pin Function
1	ACL	AC Input L; don't apply a DC voltage between the ACL and ACN pins.
2	NC	No Connection.
3	GATEL	Gate Driver for Low Side.
4	VCC	Power Source for Controller.
5	GND	Ground.
6	GATEN	Gate Driver for Low Side N.
7	NC	No Connection.
8	ACN	AC Input N; don't apply a DC voltage between the ACL and ACN pins.

Absolute Maximum Ratings

Exceeding the Absolute Maximum ratings may damage the device.

Parameter	Rating
VCC to GND	-0.3V to +24V
ACL, ACN to GND, Peak Transient Voltage[1]	-1V to 700V
ACL, ACN to GND, Negative Transient[1]	-5V
GATEL, GATEN to GND	-0.3V to (VCC + 0.3V)
Storage Temperature (T_S)	-40°C to +150°C
ESD Rating, human body model[2] – ACL, ACN	1kV
ESD Rating, human body model – GATEL, GATEN, VCC	2kV
ESD Rating, charge device model	1kV

Notes:

1. Peak voltages can be applied for 10 minutes over a lifetime.
2. Devices are inherently ESD sensitive, handling precaution are required. Human body model rating: 1.5kΩ in series with 100pF.

Recommended Operating Conditions

The device is not guaranteed to operate beyond the Maximum Recommended Operating Conditions.

Parameter	Rating
ACL, ACN to GND, DC	440V
Junction Temperature (T_J)	-40°C to +125°C
Package Thermal Resistance SO8 (Θ_{JA})	115°C/W

Electrical Characteristics

T_A = 25°C, VCC = 17V, VGND = 0V, unless otherwise specified.

Symbol	Parameter	Conditions	Min	Typ	Max	Units
V_{RRM}	Repetitive Peak Reverse Voltage	$I_{ACL/N}$ = 250µA	440			V
V_{CC_UP}	V_{CC} UVLO Rising	V_{CC} rising	15.5	16.5	17.5	V
V_{CC_UVLO}	V_{CC} UVLO Falling	V_{CC} falling	11	12.5	14	V
I_{Charge}	ACL, ACN Charging for Vcc	$V_{ACL/N} - V_{CC}$ = 13V	2	2.8		mA
I_{off}	ACL, ACN Non-charging	$V_{ACL/N}$ = 600V		1	2	µA
$I_{x\text{-}dis}$	X-discharge Current	$V_{ACL/N} - V_{CC}$ = 13V	2	3		mA
$T_{x\text{-}delay}$	X-discharge Delay Time	$V_{ACL/N}$ rising	80	120	160	ms
I_{OP}	Vcc Operation Current at On-state	$V_{ACL/N}$ =0V, $V_{ACL/N}$ =7V		35	45	µA
V_{ACL/N_ON}	Switch Turn-on Threshold	$V_{ACN/L}$ =0V, $V_{ACL/N}$ rising		5		V
V_{ACL/N_OFF}	Switch Turn-off Threshold	$V_{ACN/L}$ =0V, $V_{ACL/N}$ falling		0.75		V
T_{d_on}	Turn-on Delay Time	$V_{ACN/L}$ =0V, $V_{ACL/N}$ rising		4	5	µs
T_{d_off}	Turn-off Delay Time	$V_{ACN/L}$ =0V, $V_{ACL/N}$ falling		0.1	0.2	µs
T_{pp}	ACL, ACN Propagation Delay Time	GATEL, GATEN swap states	15	45	65	µs
I_{GATEL/N_source}	Gate Pull-high Current	V_{cc}=16V $V_{GATEL/N}$ =10V	125	200	295	mA
I_{GATEL/N_sink}	Gate Pull-low Current	V_{cc}=16V $V_{GATEL/N}$ =6V	300	380	430	mA
R_{GATEL/N_source}	Gate Pull-high Resistance		15	20	25	Ω
R_{GATEL/N_sink}	Gate Pull-low Resistance		4	7	10	Ω

Functional Block Diagram

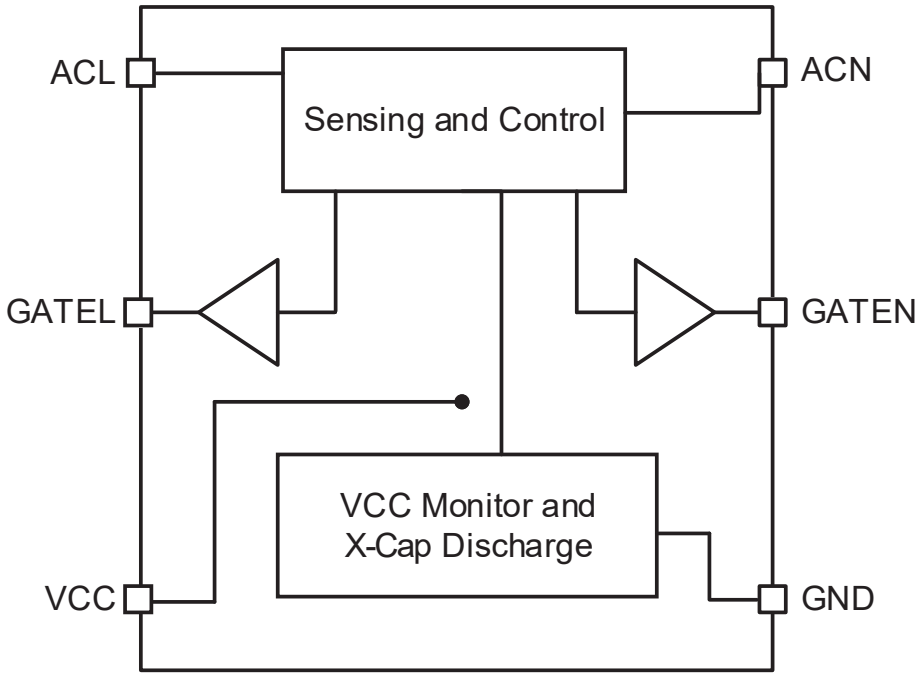

Detailed Description

The AOZ7203AV with a low-voltage capacitor can drive the two external N-MOSFETs to replace two low-side diodes in the traditional bridge rectifier application.

In normal operation, after Vcc is charged to UVLO rising level VCC_UP, AOZ7203AV senses the voltages of input pins ACL and ACN to determine when to turn high one of the gates GATEL and GATEN. When the ACL voltage approaches zero and the ACN voltage rises above the switch turn-on threshold VACL/N_ON (5V typical), the GATEL is turned high and the N-MOSFET driven by GATEL is on. When this half AC cycle comes near the end, the ACN voltage falls below the switch turn-off threshold VACL/N_OFF (0.75V typical) and the GATEL is turned low. Thus the conduction loss in this half AC cycle is reduced. On the next half AC cycle, the N-MOSFET driven by GATEN is controlled in the similar way to reduce the conduction loss.

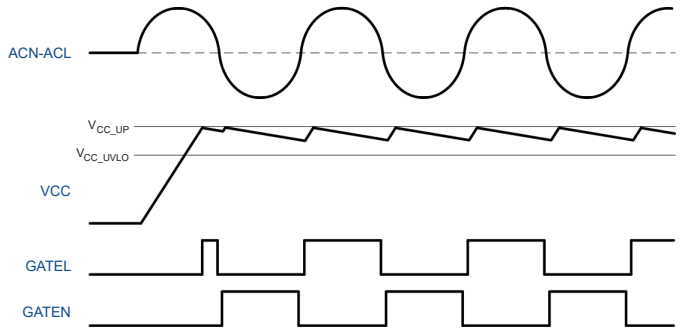

Figure 1. Startup and Normal Operation

When the AC input voltage is connected, the VCC capacitor is first charged to UVLO rising level V_{CC_UP} via the ACL or ACN pin. During normal operation, VCC capacitor is also charged when the voltage of ACL or ACN rises from zero to the level a little bit above the VCC voltage. The power consumption during charging is thus minimized to about 1mW to 2mW for AC input with typical line frequency, and the VCC voltage is thus kept above the UVLO falling level V_{CC_UVLO} if VCC capacitor is large enough. The value of VCC capacitor is recommended not smaller than 1µF/25V for typical application.

When the AC input voltage is removed, after about the X-discharge delay time Tx-delay, the AOZ7203AV enters X-cap discharge mode. The X-discharge current Ix-dis is pulled via the ACL or ACN pin to discharge the X capacitors. The GATEL and GATEN are kept low in this mode. If the AC input voltage comes back, the AOZ7203AV detects the voltage change on the ACL and ACN pin and leaves the X-cap discharge mode. The VCC voltage is then recharged and the AOZ7203 operates normally again.

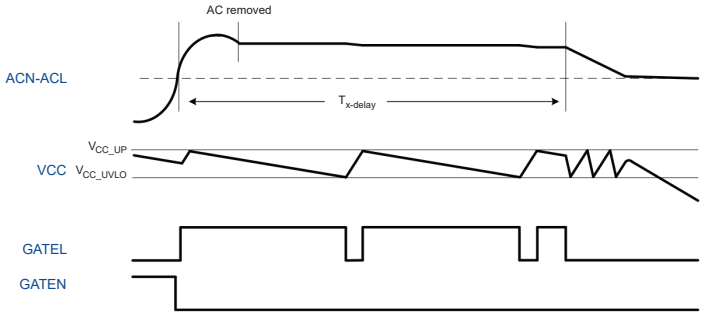

Figure 2. X-discharge Waveform

Note that AOZ7203AV does not support DC input applications. When the input voltage between ACL and ACN is a DC, after about the X-discharge delay time $T_{x\text{-}delay}$, the AOZ7203AV also enters X-cap discharge mode. Then AOZ7203AV keeps pulling the current $I_{x\text{-}dis}$ via the ACL or ACN pin and driving GATEL and GATEN low. So there is no benefit of power loss reduction.

Package Dimensions, SO8

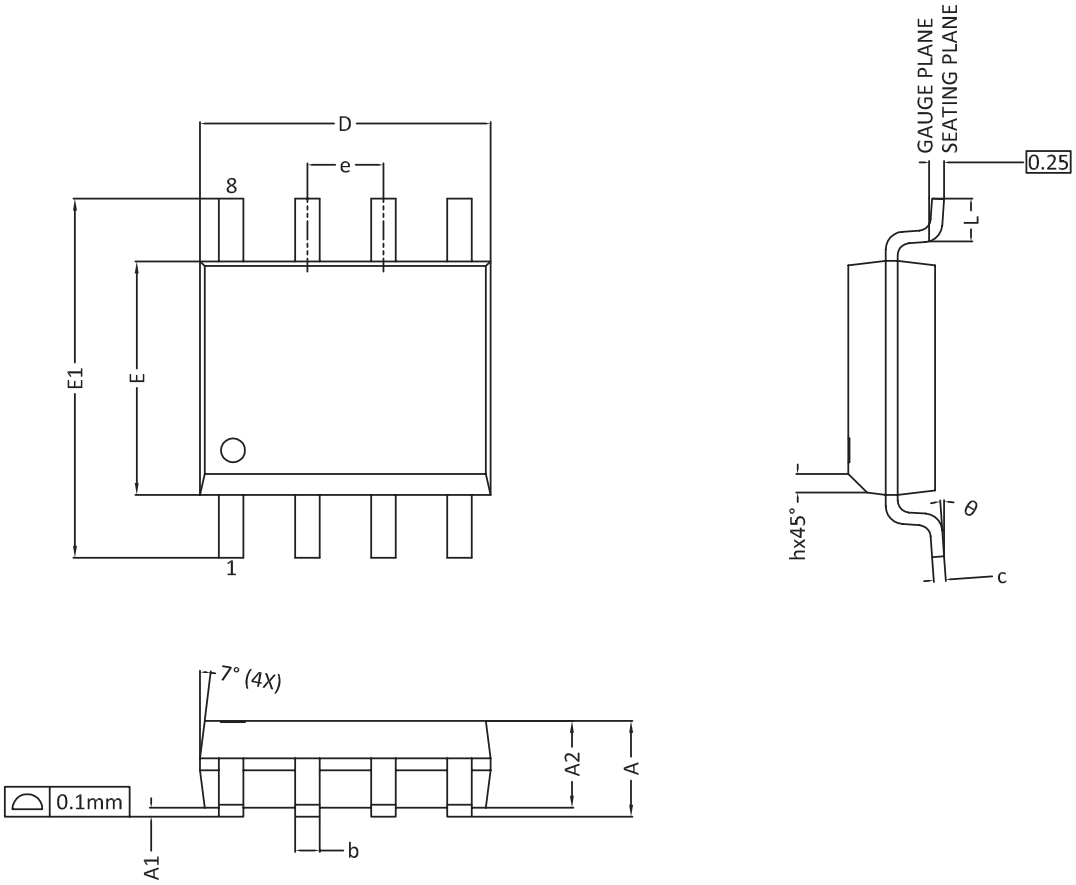

RECOMMENDED LAND PATTERN

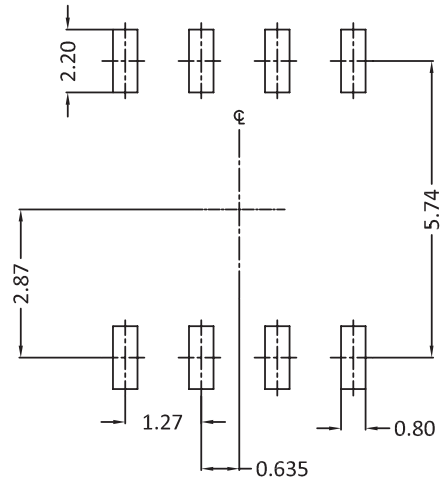

UNIT: mm

SYMBOLS	DIMENSION IN MM			DIMENSION IN INCHES		
	MIN	NOM	MAX	MIN	NOM	MAX
A	1.35	1.65	1.75	0.053	0.065	0.069
A1	0.10	0.15	0.25	0.004	0.006	0.010
A2	1.25	1.50	1.65	0.049	0.059	0.065
b	0.31	0.41	0.51	0.012	0.016	0.020
c	0.17	0.20	0.25	0.007	0.008	0.010
D	4.80	4.90	5.00	0.189	0.193	0.197
E	3.80	3.90	4.00	0.150	0.154	0.157
E1	5.80	6.00	6.20	0.228	0.236	0.244
e	1.27 BSC			0.050 BSC		
h	0.25	0.30	0.50	0.010	0.012	0.020
L	0.40	0.69	1.27	0.016	0.027	0.050
θ	0°	4°	8°	0°	4°	8°

NOTE
1. ALL DIMENSIONS ARE IN MILLMETERS.
2. DIMENSIONS ARE INCLUSIVE OF PLATING.
3. PACKAGE BODY SIZES EXCLUDE MOLD FLASH AND GATE BURRS.
   MOLD FLASH AT THE NON-LEAD SIDES SHOULD BE LESS THAN 6 MILS EACH.
4. DIMENSION L IS MEASURED IN GAUGE PLANE.
5. CONTROLLING DIMENSION IS MILLIMETER.
   CONVERTED INCH DIMENSIONS ARE NOT NECESSARILY EXACT.

Tape and Reel Dimensions, SO8

SO7/SO8/SO8_EP Carrier Tape

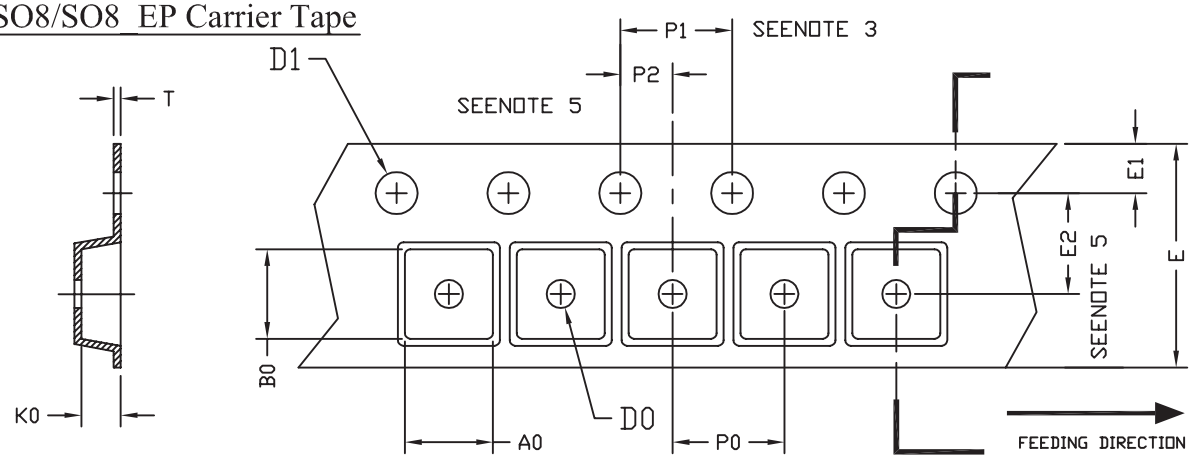

UNIT: MM

PACKAGE	A0	B0	K0	D0	D1	E	E1	E2	P0	P1	P2	T
SO7/SO-8 (12 mm)	6.40 ±0.10	5.20 ±0.10	2.10 ±0.10	1.60 ±0.10	1.50 +0.10	12.00 ±0.30	1.75 ±0.10	5.50 ±0.05	8.00 ±0.10	4.00 ±0.10	2.00 ±0.05	0.25 ±0.05

SO7/SO8/SO8_EP Reel

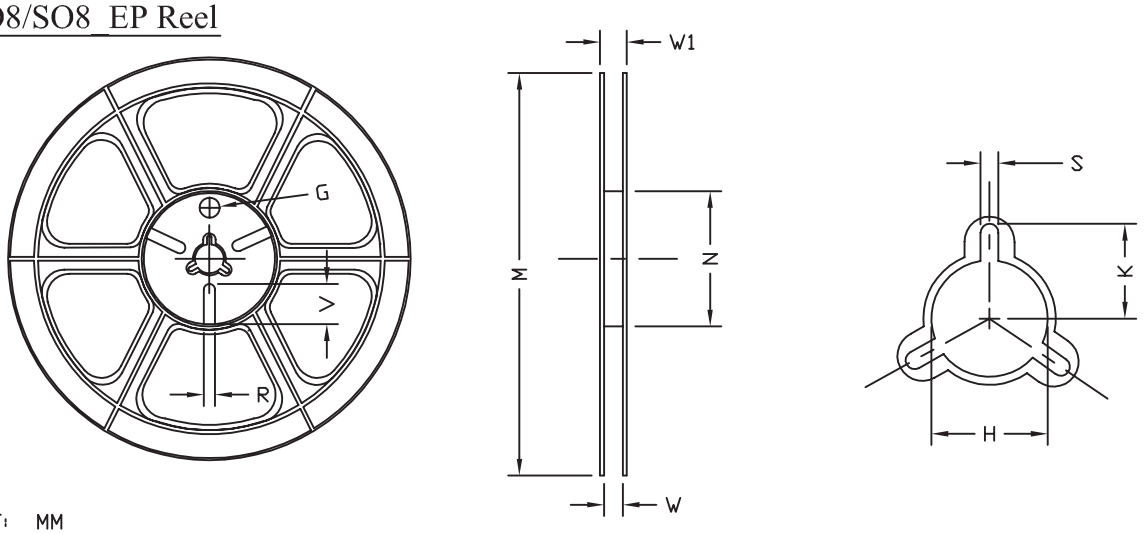

UNIT: MM

TAPE SIZE	REEL SIZE	M	N	W	W1	H	K	S	G	R	V
12 mm	ø330	ø330.00 ±0.50	ø97.00 ±0.10	13.00 ±0.30	17.40 ±1.00	ø13.00 +0.50 −0.20	10.60	2.00 ±0.50	---	---	---

SO7/SO8/SO8_EP Tape

Leader / Trailer & Orientation

Unit Per Reel: 3000pcs

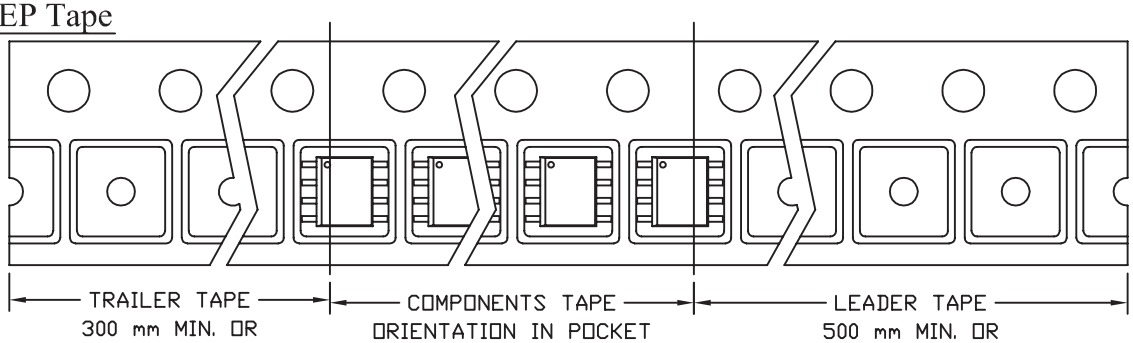

Part Marking

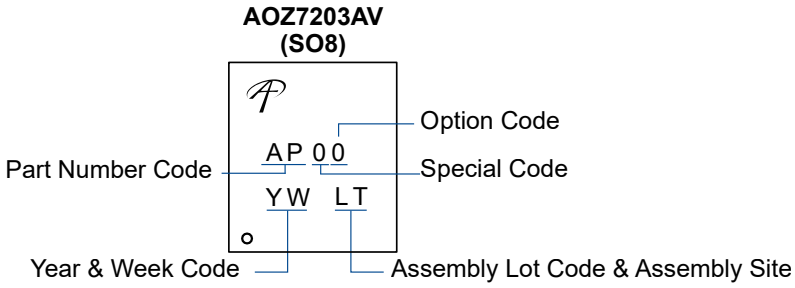

Part Number	Description	Code
AOZ7203AV	Green Product	AP00

LEGAL DISCLAIMER

Applications or uses as critical components in life support devices or systems are not authorized. Alpha and Omega Semiconductor does not assume any liability arising out of such applications or uses of its products. AOS reserves the right to make changes to product specifications without notice. It is the responsibility of the customer to evaluate suitability of the product for their intended application. Customer shall comply with applicable legal requirements, including all applicable export control rules, regulations and limitations.

AOS's products are provided subject to AOS's terms and conditions of sale which are set forth at:
http://www.aosmd.com/terms_and_conditions_of_sale

LIFE SUPPORT POLICY

ALPHA AND OMEGA SEMICONDUCTOR PRODUCTS ARE NOT AUTHORIZED FOR USE AS CRITICAL COMPONENTS IN LIFE SUPPORT DEVICES OR SYSTEMS.

As used herein:

1. Life support devices or systems are devices or systems which, (a) are intended for surgical implant into the body or (b) support or sustain life, and (c) whose failure to perform when properly used in accordance with instructions for use provided in the labeling, can be reasonably expected to result in a significant injury of the user.

2. A critical component in any component of a life support, device, or system whose failure to perform can be reasonably expected to cause the failure of the life support device or system, or to affect its safety or effectiveness.

ENTEGRECİ

Bu belge www.entegreci.com üzerinden sunulmaktadır.

Elektronik komponent tedarikinde Entegreci

Entegreci, Eskişehir merkezli, Türkiye geneline satış yapan bir elektronik komponent mağazasıdır. Entegreler (IC), mikrodenetleyiciler, transistörler, diyotlar, pasif elemanlar, konnektörler, modüller ve geliştirme kartları tek adetten seri üretim adetlerine kadar satılır. Ürün sayfalarında güncel stok durumunu, fiyatı ve datasheet bağlantısını bulabilirsiniz.

Parça koduyla arama

Üretici parça numarasını yazın; stok ve fiyatı hemen görün.

www.entegreci.com

Ürün kategorileri

Entegreden kapasitöre tüm elektronik komponent kategorileri.

Kategorilere göz atın

Üreticiler

Aradığınız üreticinin ürünlerini tek sayfada inceleyin.

Üreticileri görün

Toplu alım ve teklif

Listede olmayan ya da yüksek adetli parçalar için teklif isteyin.

Teklif isteyin

www.entegreci.com | **destek@entegreci.com** | **0850 305 90 34**

Entegreci is an online electronic components store based in Türkiye. Search by manufacturer part number to see stock, prices and datasheets for integrated circuits, microcontrollers, transistors, passive components and connectors, or request a quote for parts that are not listed.

Bu sayfa Entegreci tarafından eklenmiştir. Belgenin önceki sayfaları asıl yayıncısına aittir ve içeriği değiştirilmemiştir; en güncel sürüm için belgenin yayıncısına başvurun.