AOZ2023

3A Ultra Low Dropout Linear Regulator

General Description

The AOZ2023 is a 3A ultra low dropout linear regulator designed for desktop motherboard, graphic card and notebook applications. This device needs dual supplies, a control voltage for the control circuitry and an input voltage for power conversion. The AOZ2023 delivers high-current and ultra low-drop output voltage for applications where V_{OUT} is very close to V_{IN}.

The AOZ2023 features comprehensive control and protection functions: a power on reset (POR) circuit for monitoring both control and power inputs for proper operation; an EN input for enabling or disabling the device, a power OK with time delay for indicating the output voltage status, a current limit function, and a thermal shutdown function.

The AOZ2023 is available in exposed pad SO-8 package.

Features

- Ultra low dropout linear regulator
- 1.3V~5.5V V_{IN} supply voltage with external control voltage
- Dropout voltage (typical):
  - 180mV @ 2A
- High accuracy output voltage ±1.5%
- Enable and Power Good
- V_{OUT} pull low resistance when disabled
- Current limiting protection
- Thermal shutdown protection
- Output voltage adjustable
- Small footprint exposed pad SO-8 Package

Applications

- Desktop, notebook PCs
- Workstations
- Graphic cards
- Low voltage logic supplies
- Gaming
- SMPS post regulators

Green Product

Typical Application

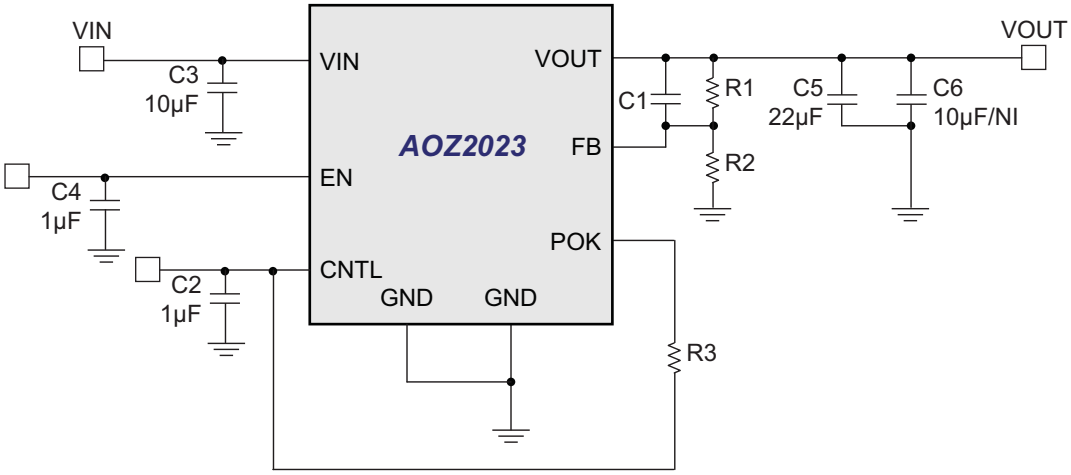

Ordering Information

Part Number	Ambient Temperature Range	Package	Environmental
AOZ2023PI	-40 °C to +85 °C	EPAD SO-8	Green Product

AOS Green Products use reduced levels of Halogens, and are also RoHS compliant.
Please visit www.aosmd.com/media/AOSGreenPolicy.pdf for additional information.

Pin Configuration

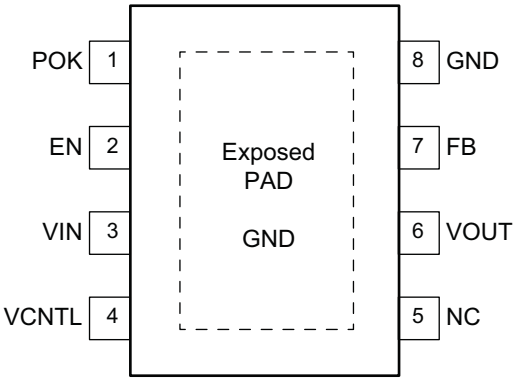

EPAD SO-8
(Top View)

Pin Description

Pin Number	Pin Name	Pin Function
1	POK	Power OK Indication. This pin is an open-drain output and is set high impedance once VOUT reaches 90% of its rating voltage.
2	EN	Enable Input. Pulling this pin below 0.8V turns the regulator off, reducing the quiescent current to a fraction of its operating value.
3	VIN	Input Voltage. This is the drain input to the power device that supply current to the output pin. Large bulk capacitors with low ESR should be placed physically close to this pin o prevent the input rail from dropping during large load transient. A 10µF ceramic capacitor is recommended at this pin.
4	VCNTL	Supply Input for Control Circuit. This pin provides bias voltage to the control circuitry and driver for the pass transistor. The driving capability of output current is proportioned to the VCNTL. For the device to regulate, the voltage on this pin must be at least 1.5V greater than the output voltage, and no less than VCNTL_min.
5	NC	Not Internally Connected.
6	VOUT	Output Voltage. This pin is power output of the device. A pull low resistance exists when the device is disabled by pulling low the EN pin.
7	FB	Feedback Voltage. This pin is the inverting input to the error amplifier. A resistor divider from the output to GND is used to set the regulation voltage as VOUT=0.8x(R1+R2)/R2 (V).
8	GND	Ground.
Exposed PAD	GND	Ground. The exposed pad acts the dominant power dissipation path and should be soldered to well design PCB pads.

Block Diagram

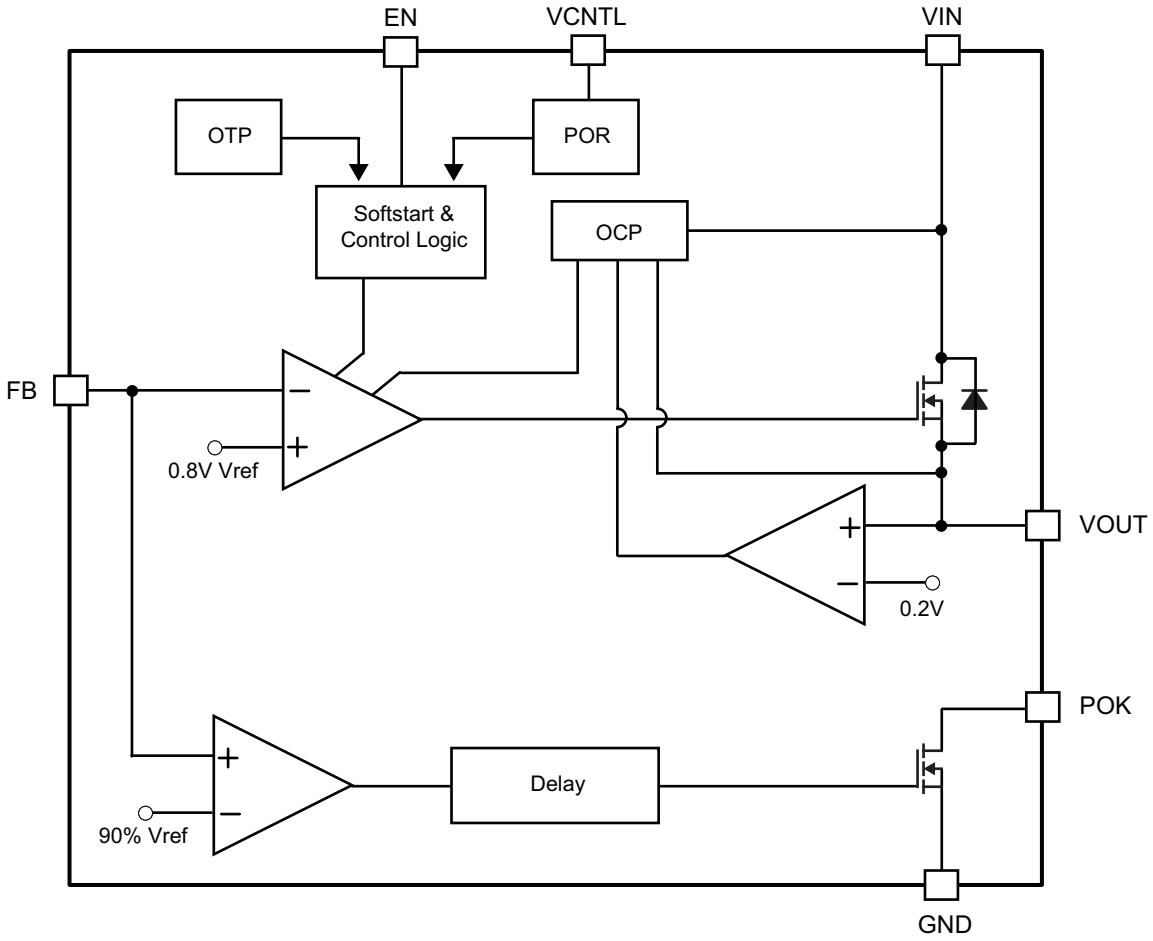

Absolute Maximum Ratings

Exceeding the Absolute Maximum Ratings may damage the device.

Parameter	Rating
VIN	1V to 6V
VCNTL	3V to 6V
VOUT	0.8V to 6V
Other Pins	-0.3V to 6V
ESD Rating(1)	2kV

Note:
1. Devices are inherently ESD sensitive, handling precautions are required. Human body model rating: 1.5kΩ in series with 100pF.

Recommended Operating Conditions

The device is not guaranteed to operate beyond the Recommended Operating Conditions.

Parameter	Rating
Supply Voltage (V_{IN})	1.3V to 5.5V
Supply Control Voltage (V_{CNTL})	3V to 5.5V
Junction Temperature (T_J)	-40°C to +125°C
Ambient Temperature (T_A)	-40°C to +85°C
Power Dissipation (P_D)	2W
Package Thermal Resistance EPAD SO-8 (Θ_{JA})	50°C/W

Electrical Characteristics

T_A = 25 °C, V_{IN} = 1.4V, V_{CNTL} = V_{EN} = 5V, C_{IN} = C_{OUT} = 10µF, unless otherwise specified. Specifications in **BOLD** indicate a temperature of -40°C to +85°C.

Symbol	Parameter	Conditions	Min.	Typ.	Max.	Units
INPUT STAGE						
V_{IN}	Input Voltage Range	V_{OUT} = 1.2V, I_{OUT} = 100mA	1.3		5.5	V
V_{CNTL}	Input Control Voltage		3		5.5	V
V_{POR}	POR		2.4	2.7	3	V
V_{UVLO_HYS}	Under-Voltage Lockout Hysteresis			300		mV
I_{CNTL}	Input Supply Current	EN = IN, V_{OUT} = V_{FB}, no load		0.5	1	mA
		EN = AGND			20	µA
V_{FB}	Feedback Reference Voltage	T_A = 25 ºC, no load	0.788	0.800	0.812	V
I_{FB}	Feedback Bias Current			0.02		µA
REGULATION						
ΔV_{FB}	Line Regulation (V_{IN})	V_{IN} = 1.4V to 5V, I_{OUT} = 100mA, V_{OUT} = 1.2V		0.015	0.15	% / ΔV
	Load Regulation	V_{IN} = 1.8V, I_{OUT} = 100mA to 2A, V_{OUT} = 1.2V		0.45	1.5	%
V_{DROP}(2)	Drop Voltage	I_{OUT} = 300mA, V_{EN} = V_{CNTL} = 5V, V_{OUT} = 1.2V		40	50	mV
		I_{OUT} = 2A, V_{EN} = V_{CNTL} = 5V, V_{OUT} = 1.2V		180	250	mV
$R_{PULL-DOWN}$	V_{OUT} Pull-down			90		Ω
ENABLE / POK						
V_{EN_HI}	Enable High Level		1.2			V
V_{EN_LOW}	Disable Low Level				0.2	V
I_{EN}	Enable Bias Current	V_{EN} = 5.5V		12		µA
V_{POK_TH}	POK Threshold	V_{IN} = V_{EN} = V_{CNTL} = 5V, No load, V_{OUT} = 1.2V		90		%
V_{POK_HYS}	POK Hysteresis	V_{IN} = V_{EN} = V_{CNTL} = 5V, No load, V_{OUT} = 1.2V		10		%
T_{POK_ON}	POK Time Delay (ON)	V_{IN} = V_{EN} = V_{CNTL} = 5V, No load, V_{FB} > 90%*V_{REF}		1		ms
T_{POK_OFF}	POK Time Delay (OFF)	V_{IN} = V_{EN} = V_{CNTL} = 5V, No load, V_{FB} < 10%*V_{REF}		50		µs
V_{POK_LOW}	POK Pull-low Voltage	POK sink current = 5mA			0.35	V
PROTECTION						
I_{LIM}(3)	Current Limit			3.5		A
I_{SC}	Short Circuit Current	V_{OUT} < 0.2V		0.8		A
T_{SD}	Thermal Shutdown Threshold			160		ºC
ΔT_{SD}	Thermal Shutdown Hysteresis			60		ºC

Notes:

2. The dropout voltage is defined as V_{IN} - V_{OUT}, which is measured when V_{OUT} is V_{OUT} - 100mV.
3. The current limit was measured by the constant current limit value when VOUT is shorted directly. It is noted that the output capacitor current was not included.

Functional Characteristics

Circuit of Typical Application 1. T_A = 25°C, V_{IN} = 1.5V, V_{CNTL} = 5V, V_{OUT} = 1.05V, unless otherwise specified.

Load Transient Response (1A)

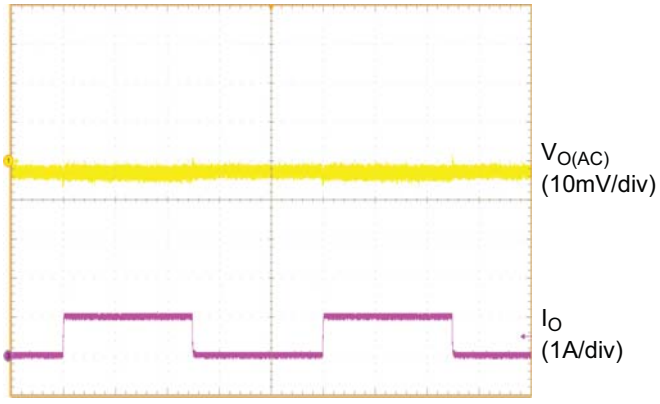

Load Transient Response (3A)

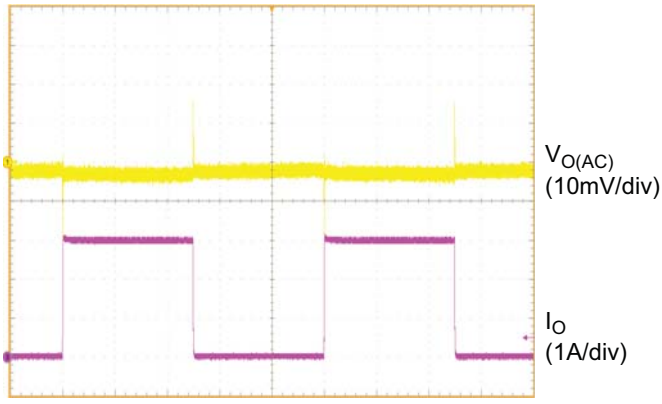

V_{IN} Line Transient Response (0A)

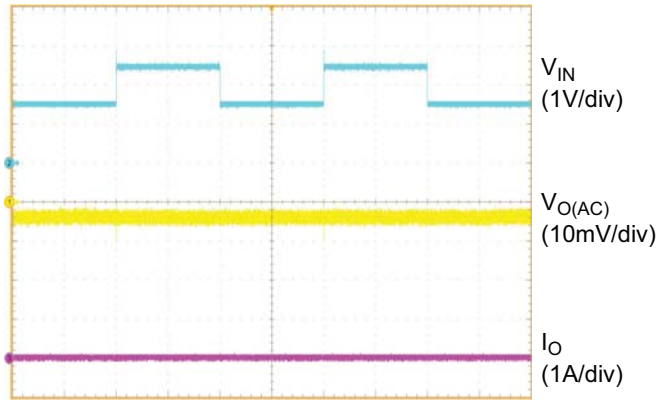

V_{IN} Line Transient Response (2A)

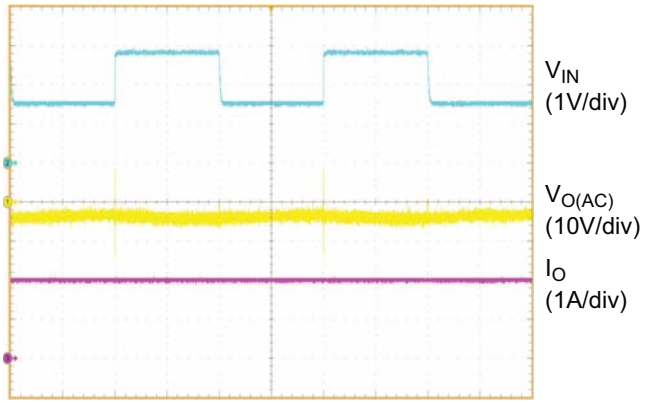

Start-Up From Enable

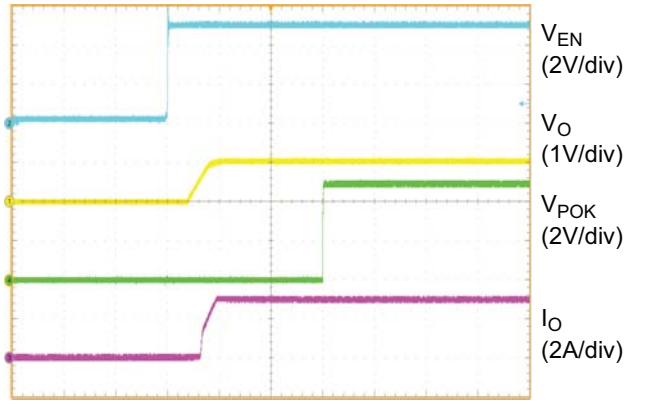

Start-Up From V_{IN}

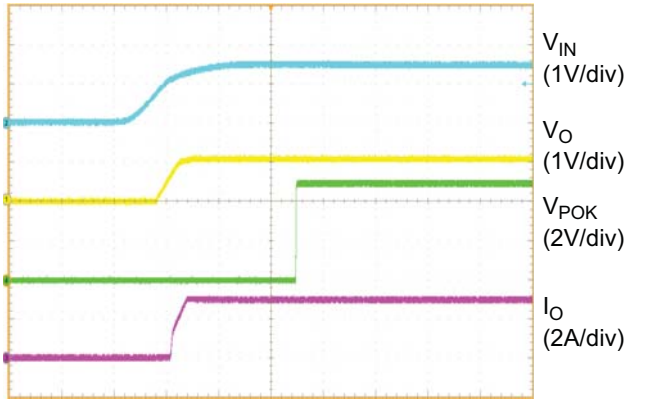

Functional Characteristics *(Continued)*

Circuit of Typical Application 1. T_A = 25°C, V_{IN} = 1.5V, V_{CNTL} = 5V, V_{OUT} = 1.05V, unless otherwise specified.

Start-Up From V_{CNTL}

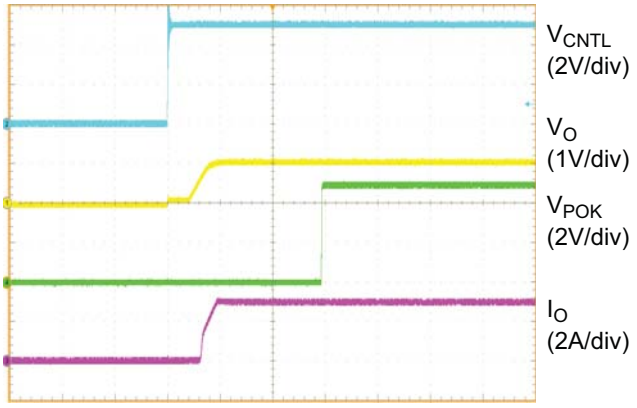

Short Current Protection

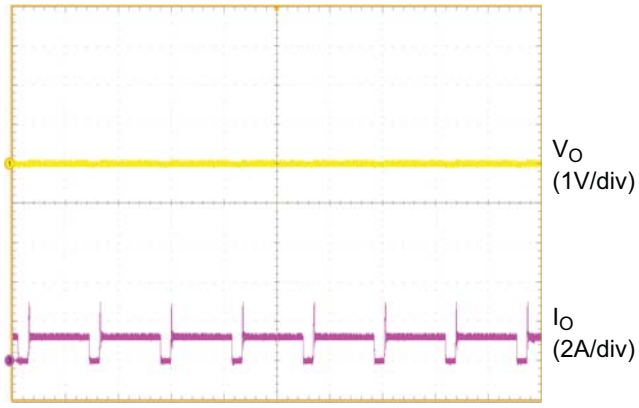

Over Temperature Protection (V_{IN} = 5V)

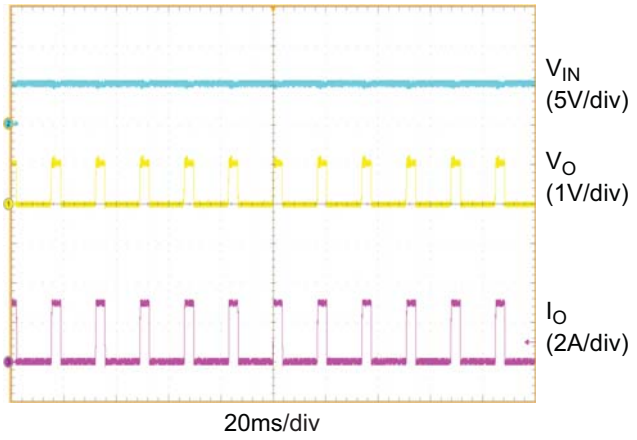

Current Limit

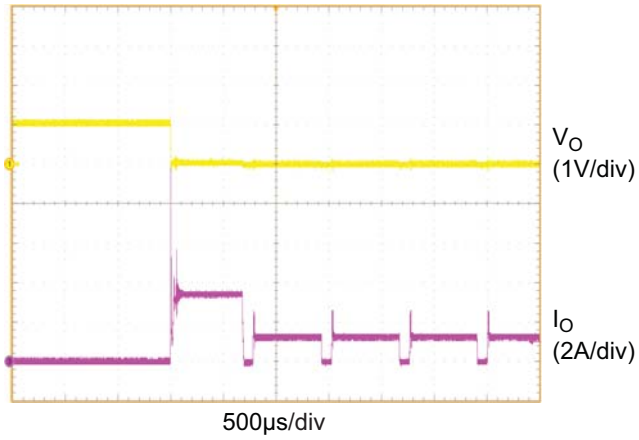

Typical Performance Characteristics

Circuit of Typical Application 1. T_A = 25°C, V_{IN} = 1.5V, V_{CNTL} = 5V, V_{OUT} = 1.05V, unless otherwise specified.

Dropout Voltage vs. Load Current

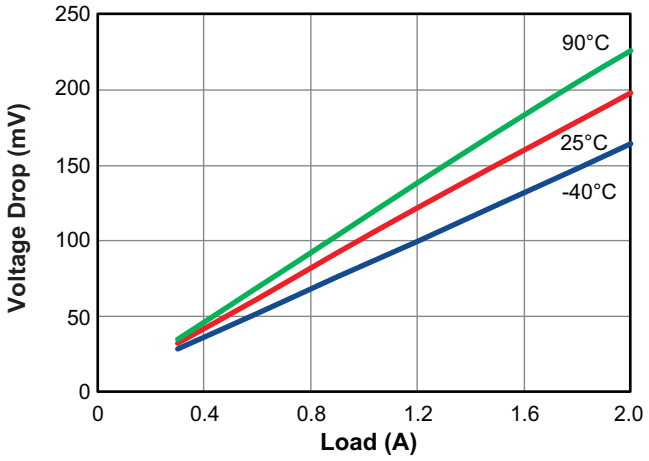

Current Limit vs. Temperature

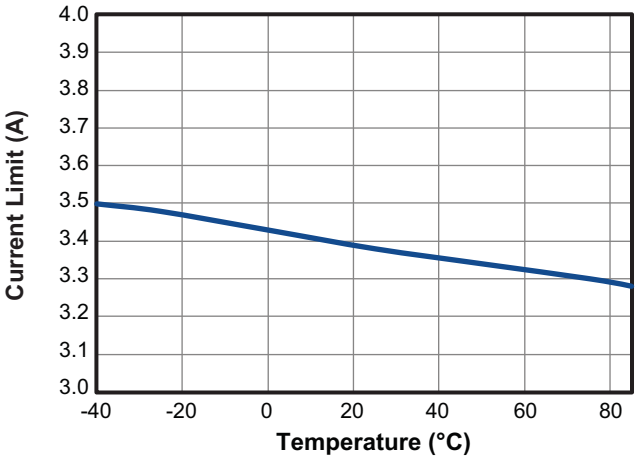

V_{CNTL} Standby Current vs. Temperature

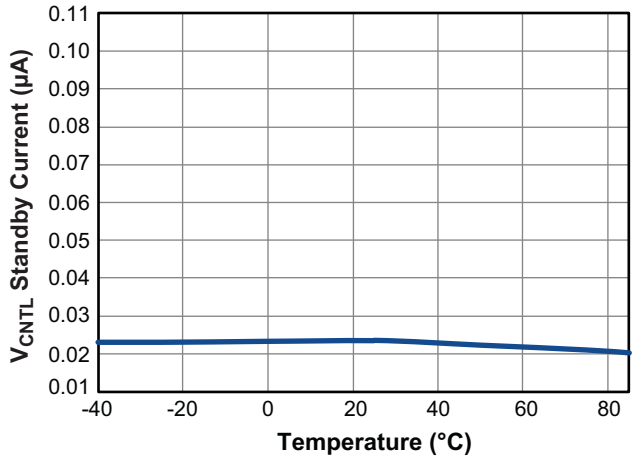

Short Circuit vs. Temperature

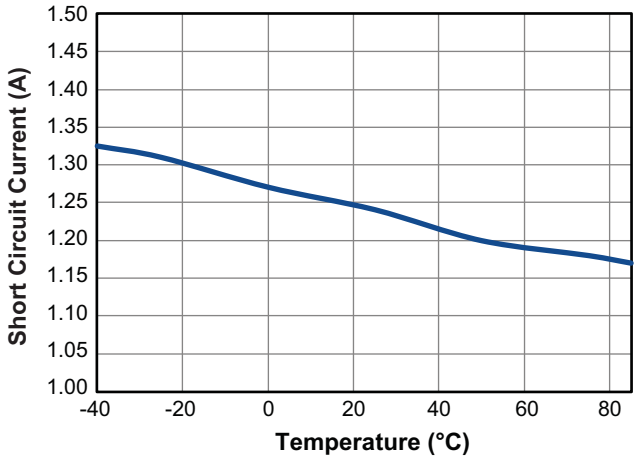

V_{CNTL} POR Threshold Voltage vs. Temperature

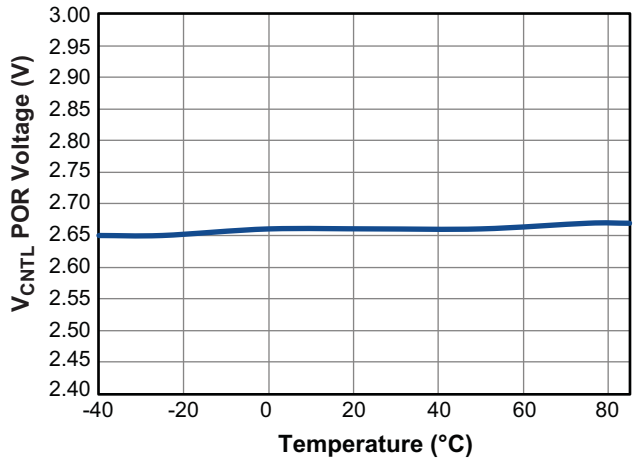

Reference Voltage vs. Temperature

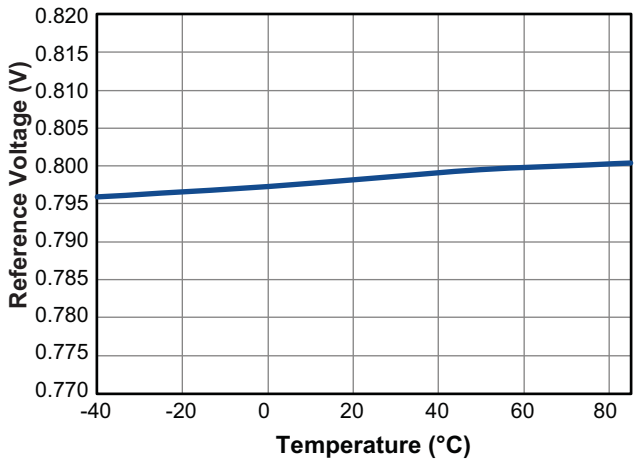

Application Information

Output Voltage Setting

The output voltage can be set by the output voltage divider. Typically, the adjustable range of the output voltage is from 1V to (V_{IN} - V_{drop}). The output voltage is set by the equation below:

$$V_{OUT} = 0.8V \times \frac{R1 + R2}{R2}$$

Supply Voltage (VCNTL)

Supply voltage is used to provide the power for the internal circuits. For the device to regulate, the voltage on this pin must be at least 1.5V greater than the output voltage, and no less than V_{CNTL_min}. A 0.1µF or more ceramic capacitor close to the pin is required to filter the control voltage.

Enable (EN)

The EN pin is used to turn off the regulator by pulling this pin below 0.8V. When the linear regulator is operated in the disable mode, the quiescent current can be limited below several ten micro-amp level.

Input / Output Capacitor

A 10µF or more capacitances for the input side (VIN) is necessary. This not only decouples the noise from input side, but also keeps the input impedance as low as possible. In addition, a 22µF or more capacitances for the VIN above 4.5V is recommended for much lower input impedance.

A 10µF output capacitor is typically used with a 0.1µF ceramic capacitor for the output terminal (VOUT). Internal type-II compensation network allows lower ESR capacitors without stability problem.

Power OK (POK)

The POK pin is used to provide a logic signal to notice that the regulator works well. When the output voltage through the voltage divider is regulated above 90% of reference voltage, this pin will be as a high impedance status due to the open-drain output. An external pull-up resister is necessary to provide high-level signal. The sink capability of the POK pin is limited below 5mA. Typically, a 5.1kΩ resister for the 5V is recommended.

Over Temperature Protection (OTP)

It is recommended that the junction temperature can be kept below the recommended operation condition 125 degree for maximum reliability. This power dissipation is conducted through the package into the ambient environment, and, in the process, the temperature of the die (T_J) rises above ambient.

Package Dimensions, SO-8 EP1

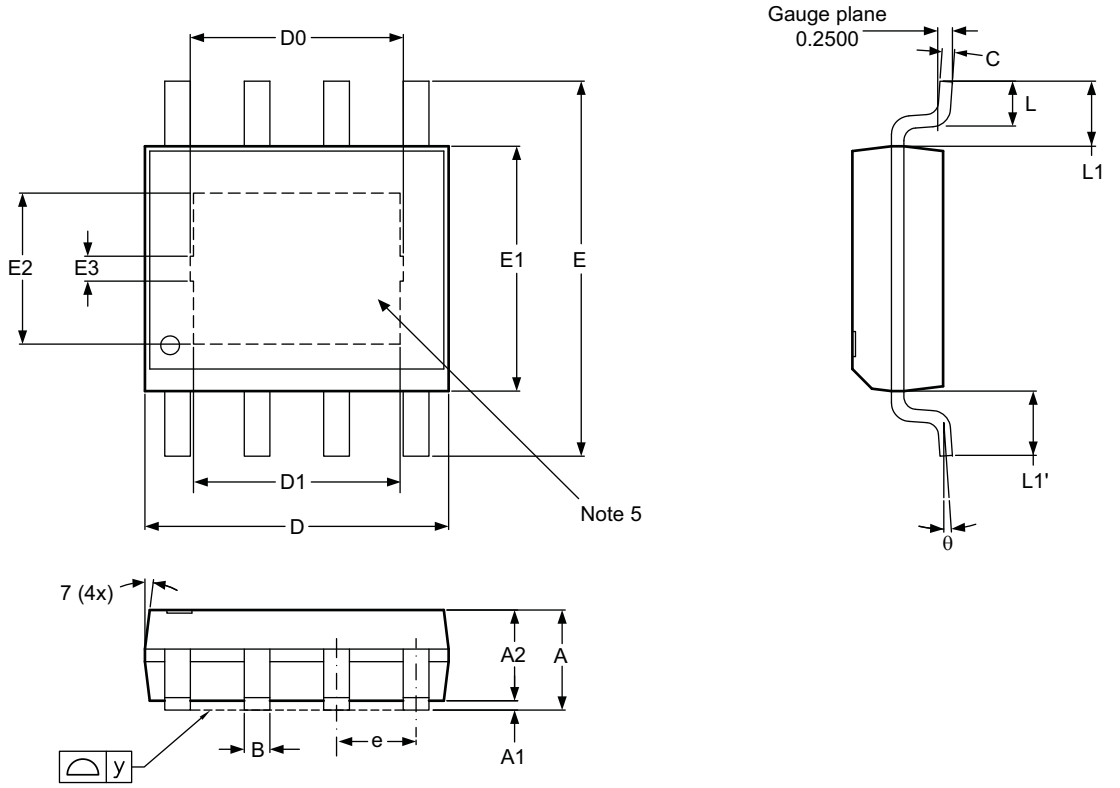

RECOMMENDED LAND PATTERN

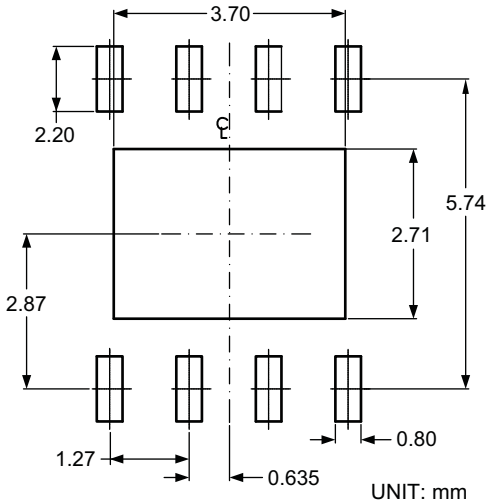

Dimensions in millimeters

Symbols	Min.	Nom.	Max.
A	1.40	1.55	1.70
A1	0.00	0.05	0.10
A2	1.40	1.50	1.60
B	0.31	0.406	0.51
C	0.17	—	0.25
D	4.80	4.96	5.00
D0	3.20	3.40	3.60
D1	3.10	3.30	3.50
E	5.80	6.00	6.20
e	—	1.27	—
E1	3.80	3.90	4.00
E2	2.21	2.41	2.61
E3	0.40 REF		
L	0.40	0.95	1.27
y	—	—	0.10
θ	0°	3°	8°
| L1–L1' |	—	0.04	0.12
L1	1.04 REF		

Dimensions in inches

Symbols	Min.	Nom.	Max.
A	0.055	0.061	0.067
A1	0.000	0.002	0.004
A2	0.055	0.059	0.063
B	0.012	0.016	0.020
C	0.007	—	0.010
D	0.189	0.195	0.197
D0	0.126	0.134	0.142
D1	0.122	0.130	0.138
E	0.228	0.236	0.244
e	—	0.050	—
E1	0.150	0.153	0.157
E2	0.087	0.095	0.103
E3	0.016 REF		
L	0.016	0.037	0.050
y	—	—	0.004
θ	0°	3°	8°
| L1–L1' |	—	0.002	0.005
L1	0.041 REF		

Notes:

1. Package body sizes exclude mold flash and gate burrs.
2. Dimension L is measured in gauge plane.
3. Tolerance 0.10mm unless otherwise specified.
4. Controlling dimension is millimeter, converted inch dimensions are not necessarily exact.
5. Die pad exposure size is according to lead frame design.
6. Followed from JEDEC MS-012

Tape and Reel Dimensions, SO-8 EP1

Carrier Tape

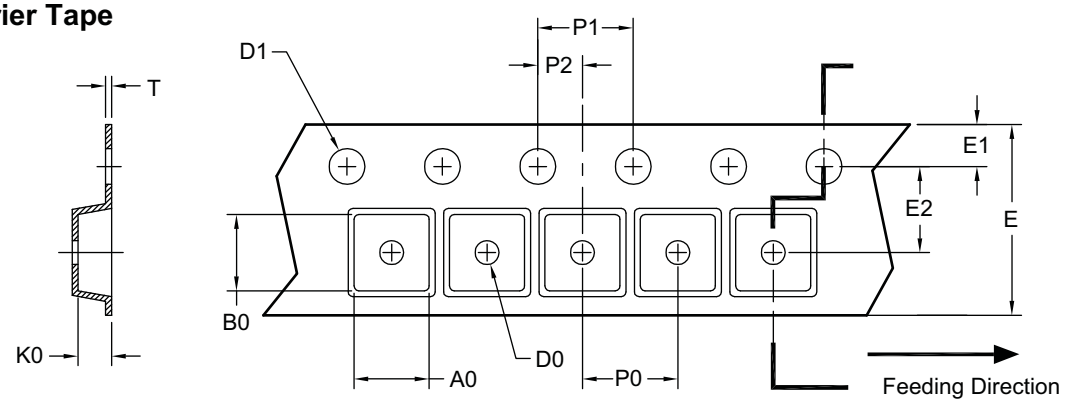

UNIT: mm

Package	A0	B0	K0	D0	D1	E	E1	E2	P0	P1	P2	T
SO-8 (12mm)	6.40 ±0.10	5.20 ±0.10	2.10 ±0.10	1.60 ±0.10	1.50 ±0.10	12.00 ±0.10	1.75 ±0.10	5.50 ±0.10	8.00 ±0.10	4.00 ±0.10	2.00 ±0.10	0.25 ±0.10

Reel

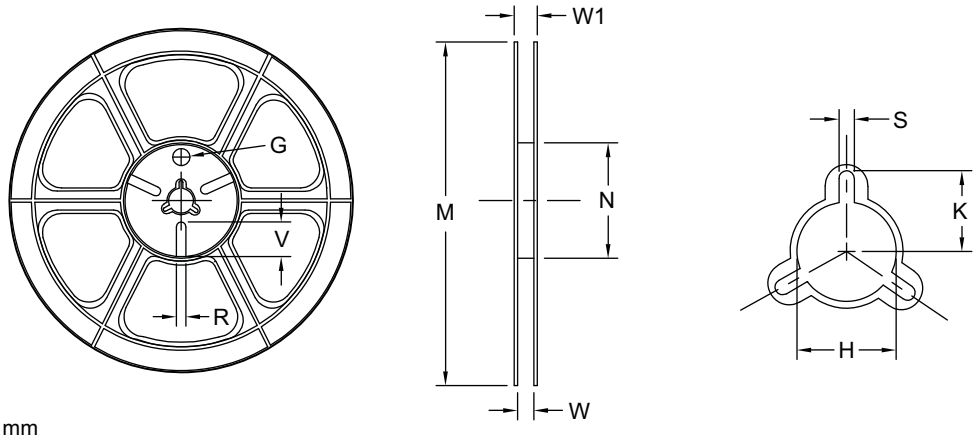

UNIT: mm

Tape Size	Reel Size	M	N	W	W1	H	K	S	G	R	V
12mm	ø330	ø330.00 ±0.50	ø97.00 ±0.10	13.00 ±0.30	17.40 ±1.00	ø13.00 +0.50/-0.20	10.60	2.00 ±0.50	—	—	—

Leader/Trailer and Orientation

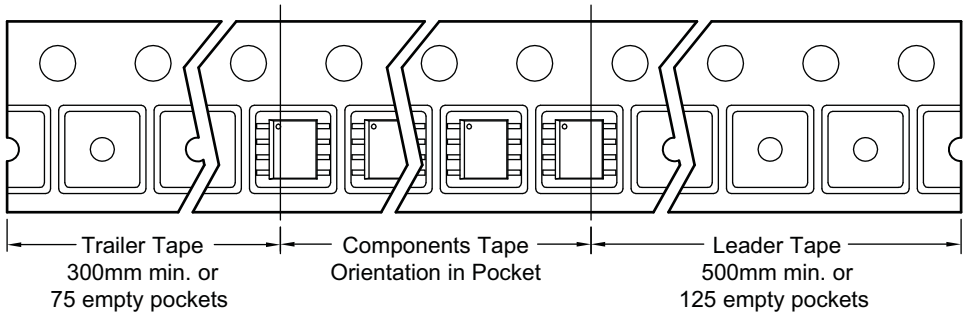

Part Marking

AOZ2023PI
(SO-8)

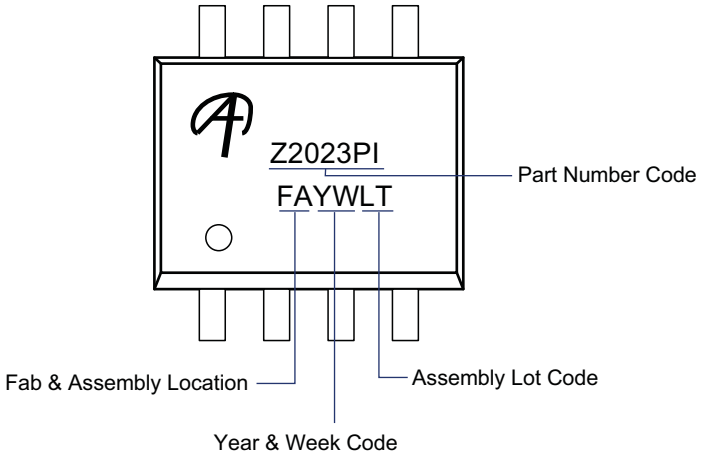

LEGAL DISCLAIMER

Alpha and Omega Semiconductor makes no representations or warranties with respect to the accuracy or completeness of the information provided herein and takes no liabilities for the consequences of use of such information or any product described herein. Alpha and Omega Semiconductor reserves the right to make changes to such information at any time without further notice. This document does not constitute the grant of any intellectual property rights or representation of non-infringement of any third party's intellectual property rights.

LIFE SUPPORT POLICY

ALPHA AND OMEGA SEMICONDUCTOR PRODUCTS ARE NOT AUTHORIZED FOR USE AS CRITICAL COMPONENTS IN LIFE SUPPORT DEVICES OR SYSTEMS.

As used herein:

1. Life support devices or systems are devices or systems which, (a) are intended for surgical implant into the body or (b) support or sustain life, and (c) whose failure to perform when properly used in accordance with instructions for use provided in the labeling, can be reasonably expected to result in a significant injury of the user.

2. A critical component in any component of a life support, device, or system whose failure to perform can be reasonably expected to cause the failure of the life support device or system, or to affect its safety or effectiveness.

ENTEGRECİ

Bu belge www.entegreci.com üzerinden sunulmaktadır.

Elektronik komponent tedarikinde Entegreci

Entegreci, Eskişehir merkezli, Türkiye geneline satış yapan bir elektronik komponent mağazasıdır. Entegreler (IC), mikrodenetleyiciler, transistörler, diyotlar, pasif elemanlar, konnektörler, modüller ve geliştirme kartları tek adetten seri üretim adetlerine kadar satılır. Ürün sayfalarında güncel stok durumunu, fiyatı ve datasheet bağlantısını bulabilirsiniz.

Parça koduyla arama

Üretici parça numarasını yazın; stok ve fiyatı hemen görün.

www.entegreci.com

Ürün kategorileri

Entegreden kapasitöre tüm elektronik komponent kategorileri.

Kategorilere göz atın

Üreticiler

Aradığınız üreticinin ürünlerini tek sayfada inceleyin.

Üreticileri görün

Toplu alım ve teklif

Listede olmayan ya da yüksek adetli parçalar için teklif isteyin.

Teklif isteyin

www.entegreci.com | **destek@entegreci.com** | **0850 305 90 34**

Entegreci is an online electronic components store based in Türkiye. Search by manufacturer part number to see stock, prices and datasheets for integrated circuits, microcontrollers, transistors, passive components and connectors, or request a quote for parts that are not listed.

Bu sayfa Entegreci tarafından eklenmiştir. Belgenin önceki sayfaları asıl yayıncısına aittir ve içeriği değiştirilmemiştir; en güncel sürüm için belgenin yayıncısına başvurun.