ALPHA & OMEGA SEMICONDUCTOR

AOTL66810

80V N-Channel AlphaSGT™

General Description

- AlphaSGT™ N-Channel Power MOSFET
- Excellent gate charge x $R_{DS(ON)}$ product (FOM)
- PB-free lead plating, RoHS compliant

Applications

- BLDC Motor Drive
- Battery Management
- Load Switch

Product Summary

V_{DS}	80V
I_D (at V_{GS}=10V)	445A
$R_{DS(ON)}$ (at V_{GS}=10V)	< 1.25mΩ
$R_{DS(ON)}$ (at V_{GS}=8V)	< 1.45mΩ

100% UIS Tested
100% Rg Tested

Max Tj=175°C

GREEN Product

TOLLA

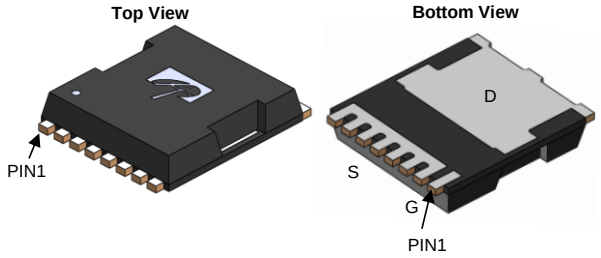

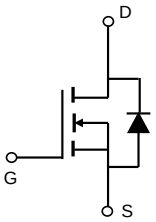

Orderable Part Number	Package Type	Form	Minimum Order Quantity
AOTL66810	TOLLA	Tape & Reel	2000

Absolute Maximum Ratings T_A=25°C unless otherwise noted

Parameter		Symbol	Maximum	Units
Drain-Source Voltage		V_{DS}	80	V
Gate-Source Voltage		V_{GS}	±20	V
Continuous Drain Current	T_C=25°C	I_D	445	A
	T_C=100°C		315	
Pulsed Drain Current [C] (≤100µS)		I_{DM}	1780	
Continuous Drain Current	T_A=25°C	I_{DSM}	63	A
	T_A=70°C		52	
Avalanche Current [C]		I_{AS}	80	A
Avalanche energy	L=0.3mH [C]	E_{AS}	960	mJ
Power Dissipation [B]	T_C=25°C	P_D	500	W
	T_C=100°C		250	
Power Dissipation [A]	T_A=25°C	P_{DSM}	10	W
	T_A=70°C		7	
Junction and Storage Temperature Range		T_J, T_{STG}	-55 to 175	°C

Thermal Characteristics

Parameter		Symbol	Typ	Max	Units
Maximum Junction-to-Ambient [A]	t ≤ 10s	$R_{\theta JA}$	10	15	°C/W
Maximum Junction-to-Ambient [A D]	Steady-State		35	45	°C/W
Maximum Junction-to-Case	Steady-State	$R_{\theta JC}$	0.2	0.3	°C/W

Electrical Characteristics (T_J=25°C unless otherwise noted)

Symbol	Parameter	Conditions	Min	Typ	Max	Units
STATIC PARAMETERS						
BV_{DSS}	Drain-Source Breakdown Voltage	I_D=250µA, V_{GS}=0V	80			V
I_{DSS}	Zero Gate Voltage Drain Current	V_{DS}=80V, V_{GS}=0V			1	µA
		T_J=55°C			5	
I_{GSS}	Gate-Body leakage current	V_{DS}=0V, V_{GS}=±20V			±100	nA
$V_{GS(th)}$	Gate Threshold Voltage	V_{DS}=V_{GS}, I_D=250µA	2.4	3	3.6	V
$R_{DS(ON)}$	Static Drain-Source On-Resistance	V_{GS}=10V, I_D=20A		1.0	1.25	mΩ
		T_J=125°C		1.5	1.90	
		V_{GS}=8V, I_D=20A		1.1	1.45	mΩ
g_{FS}	Forward Transconductance	V_{DS}=5V, I_D=20A		100		S
V_{SD}	Diode Forward Voltage	I_S=1A, V_{GS}=0V		0.7	1	V
I_S	Maximum Body-Diode Continuous Current				200	A
DYNAMIC PARAMETERS						
C_{iss}	Input Capacitance	V_{GS}=0V, V_{DS}=40V, f=1MHz		13000		pF
C_{oss}	Output Capacitance			3300		pF
C_{rss}	Reverse Transfer Capacitance			60		pF
R_g	Gate resistance	f=1MHz	1	2	3	Ω
SWITCHING PARAMETERS						
Q_g(10V)	Total Gate Charge	V_{GS}=10V, V_{DS}=40V, I_D=20A		175	245	nC
Q_{gs}	Gate Source Charge			50		nC
Q_{gd}	Gate Drain Charge			35		nC
Q_{oss}	Output Charge	V_{GS}=0V, V_{DS}=40V		238		nC
$t_{D(on)}$	Turn-On DelayTime	V_{GS}=10V, V_{DS}=40V, R_L=2.0Ω, R_{GEN}=3Ω		35		ns
t_r	Turn-On Rise Time			25		ns
$t_{D(off)}$	Turn-Off DelayTime			113		ns
t_f	Turn-Off Fall Time			39		ns
t_{rr}	Body Diode Reverse Recovery Time	I_F=20A, di/dt=500A/µs		52		ns
Q_{rr}	Body Diode Reverse Recovery Charge	I_F=20A, di/dt=500A/µs		340		nC

A. The value of $R_{\theta JA}$ is measured with the device mounted on 1in² FR-4 board with 2oz. Copper, in a still air environment with T_A =25° C. The Power dissipation P_{DSM} is based on $R_{\theta JA}$ t≤ 10s and the maximum allowed junction temperature of 175° C. The value in any given application depends on the user's specific board design, and the maximum temperature of 175° C may be used if the PCB allows it.
B. The power dissipation P_D is based on $T_{J(MAX)}$=175° C, using junction-to-case thermal resistance, and is more useful in setting the upper dissipation limit for cases where additional heatsinking is used.
C. Single pulse width limited by junction temperature $T_{J(MAX)}$=175° C.
D. The $R_{\theta JA}$ is the sum of the thermal impedance from junction to case $R_{\theta JC}$ and case to ambient.
E. The static characteristics in Figures 1 to 6 are obtained using <300µs pulses, duty cycle 0.5% max.
F. These curves are based on the junction-to-case thermal impedance which is measured with the device mounted to a large heatsink, assuming a maximum junction temperature of $T_{J(MAX)}$=175° C. The SOA curve provides a single pulse rating.
G. These tests are performed with the device mounted on 1 in² FR-4 board with 2oz. Copper, in a still air environment with T_A=25° C.

APPLICATIONS OR USES AS CRITICAL COMPONENTS IN LIFE SUPPORT DEVICES OR SYSTEMS ARE NOT AUTHORIZED. AOS DOES NOT ASSUME ANY LIABILITY ARISING OUT OF SUCH APPLICATIONS OR USES OF ITS PRODUCTS. AOS RESERVES THE RIGHT TO MAKE CHANGES TO PRODUCT SPECIFICATIONS WITHOUT NOTICE. IT IS THE RESPONSIBILITY OF THE CUSTOMER TO EVALUATE SUITABILITY OF THE PRODUCT FOR THEIR INTENDED APPLICATION. CUSTOMER SHALL COMPLY WITH APPLICABLE LEGAL REQUIREMENTS, INCLUDING ALL APPLICABLE EXPORT CONTROL RULES, REGULATIONS AND LIMITATIONS.

AOS' products are provided subject to AOS' terms and conditions of sale which are set forth at:
http://www.aosmd.com/terms_and_conditions_of_sale

TYPICAL ELECTRICAL AND THERMAL CHARACTERISTICS

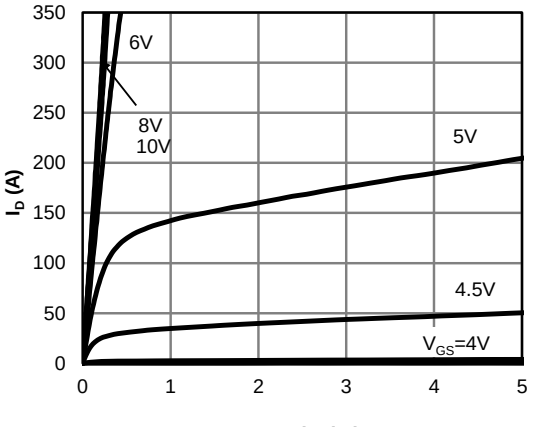

Figure 1: On-Region Characteristics (Note E)

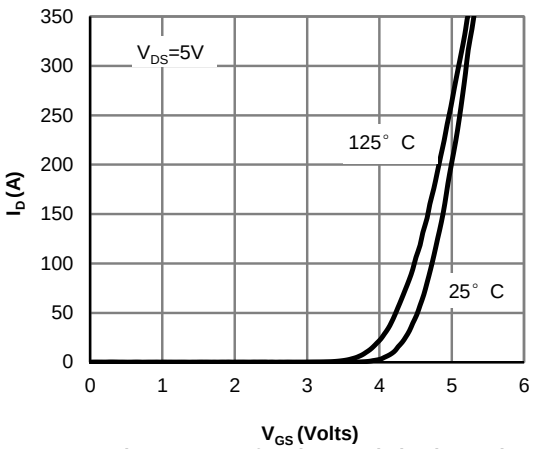

Figure 2: Transfer Characteristics (Note E)

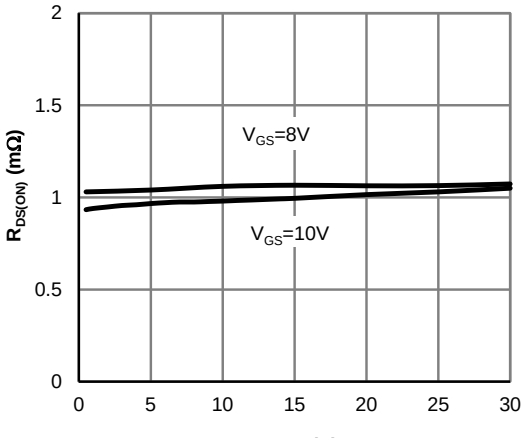

Figure 3: On-Resistance vs. Drain Current and Gate Voltage (Note E)

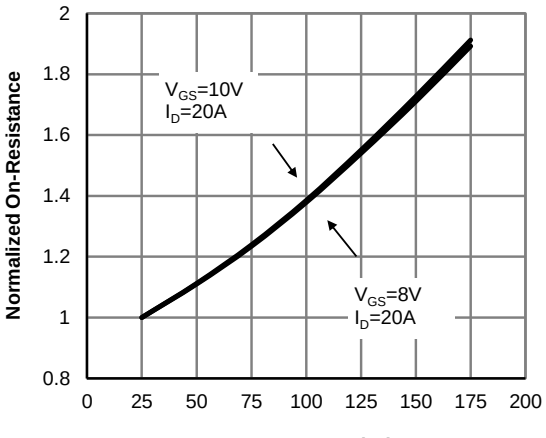

Figure 4: On-Resistance vs. Junction Temperature (Note E)

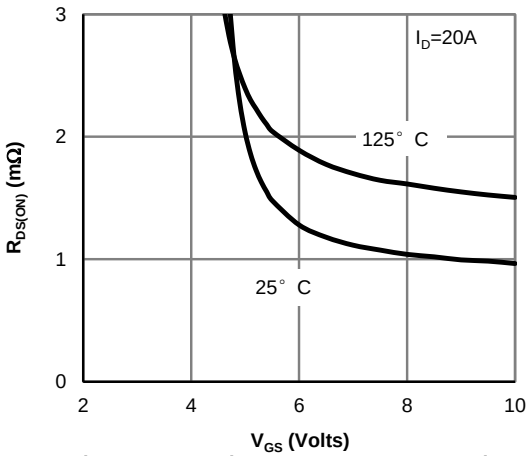

Figure 5: On-Resistance vs. Gate-Source Voltage (Note E)

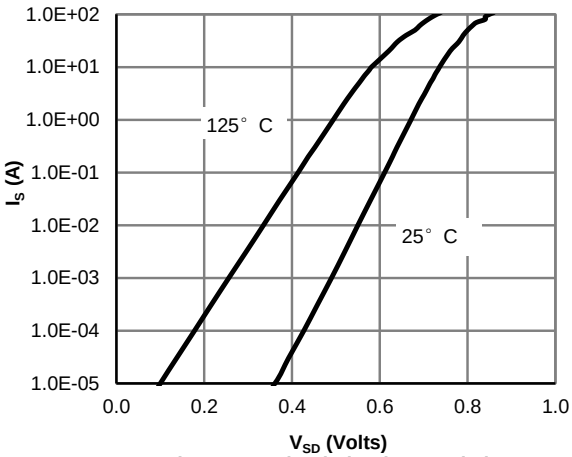

Figure 6: Body-Diode Characteristics (Note E)

TYPICAL ELECTRICAL AND THERMAL CHARACTERISTICS

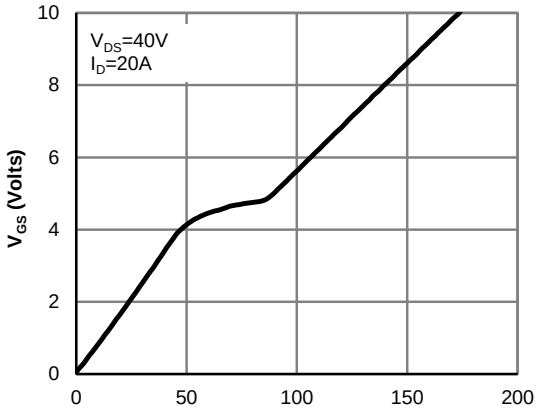

Figure 7: Gate-Charge Characteristics

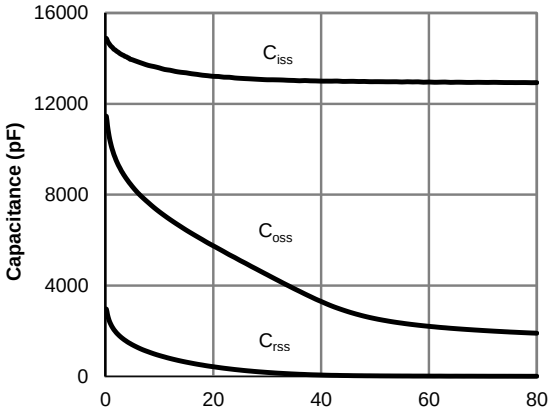

Figure 8: Capacitance Characteristics

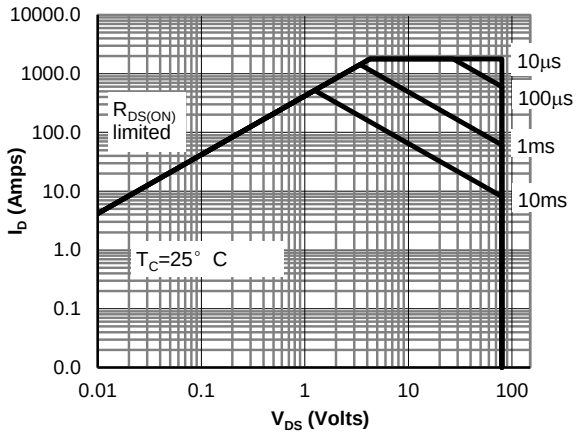

Figure 9: Maximum Forward Biased Safe Operating Area (Note F)

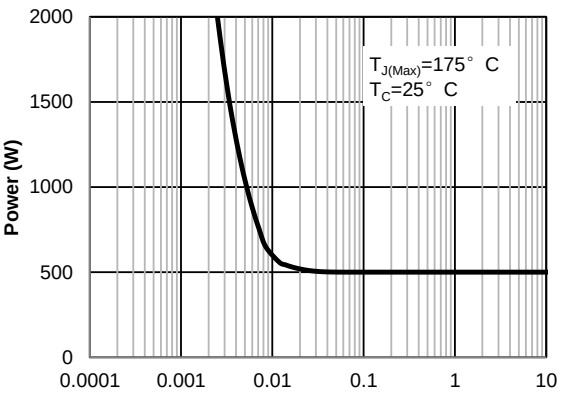

Figure 10: Single Pulse Power Rating Junction-to-Case (Note F)

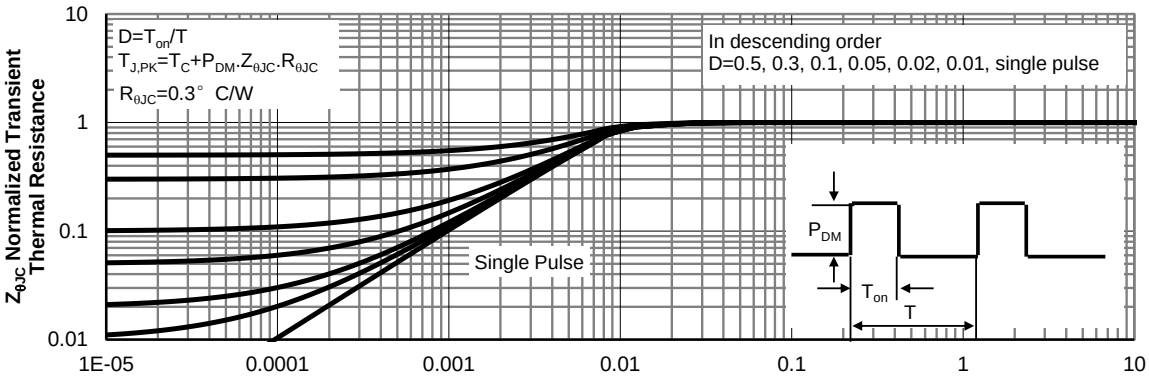

Figure 11: Normalized Maximum Transient Thermal Impedance (Note F)

TYPICAL ELECTRICAL AND THERMAL CHARACTERISTICS

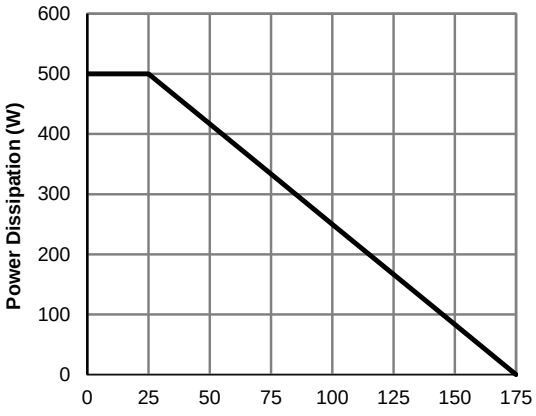

Figure 12: Power De-rating (Note F)

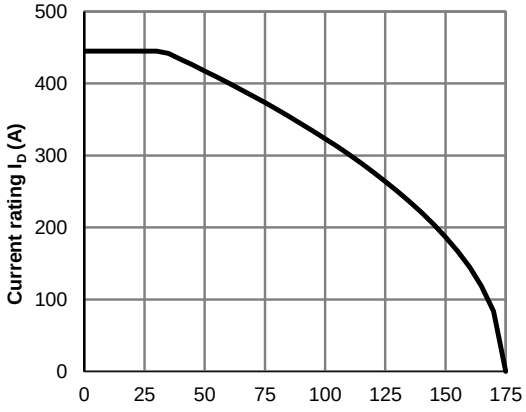

Figure 13: Current De-rating (Note F)

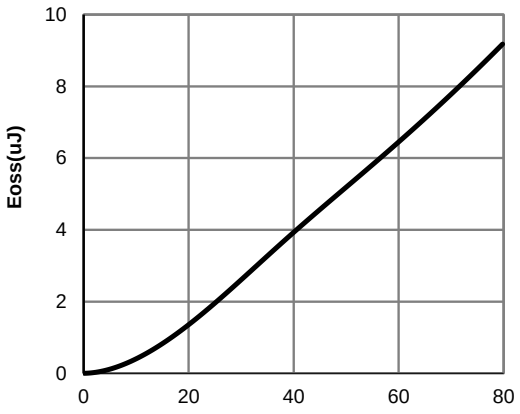

Figure 14: Coss stored Energy

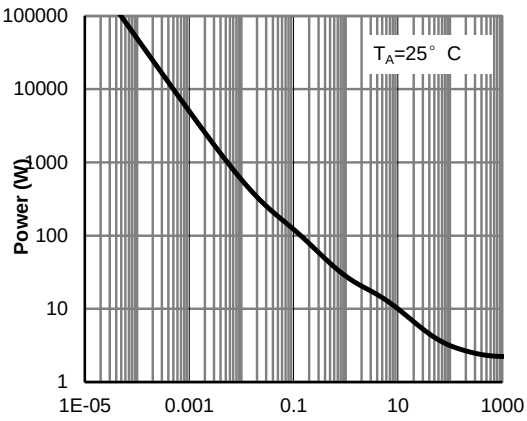

Figure 15: Single Pulse Power Rating Junction-to-Ambient (Note G)

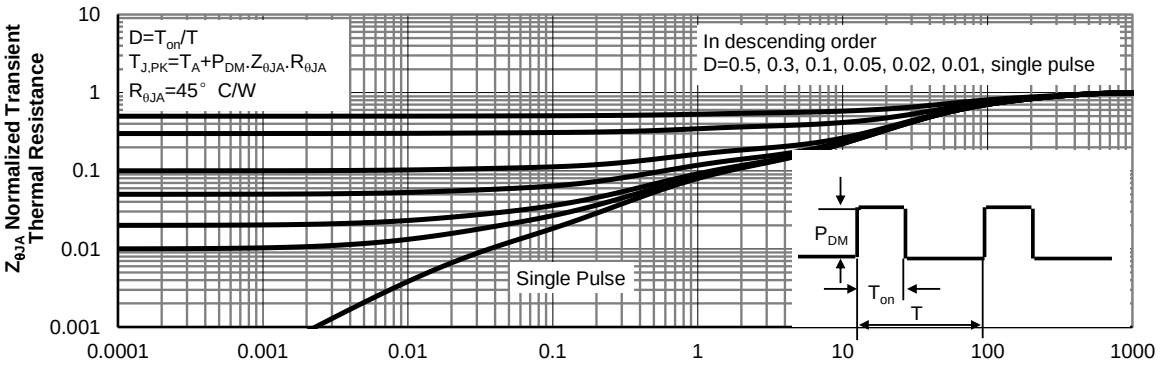

Figure 16: Normalized Maximum Transient Thermal Impedance (Note G)

Figure A: Gate Charge Test Circuit & Waveforms

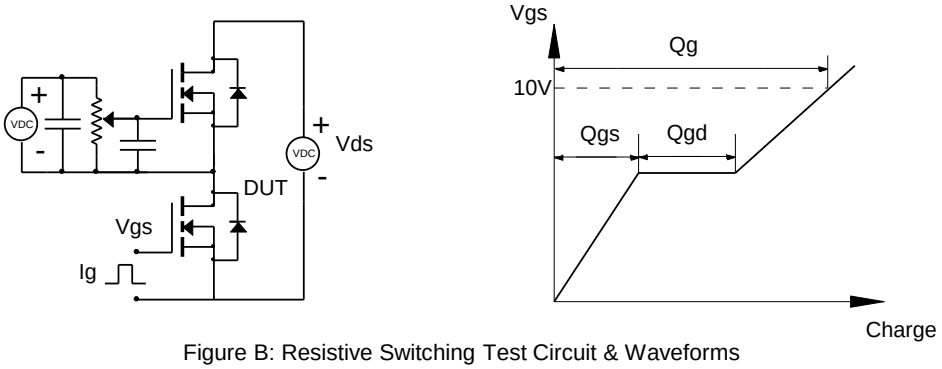

Figure B: Resistive Switching Test Circuit & Waveforms

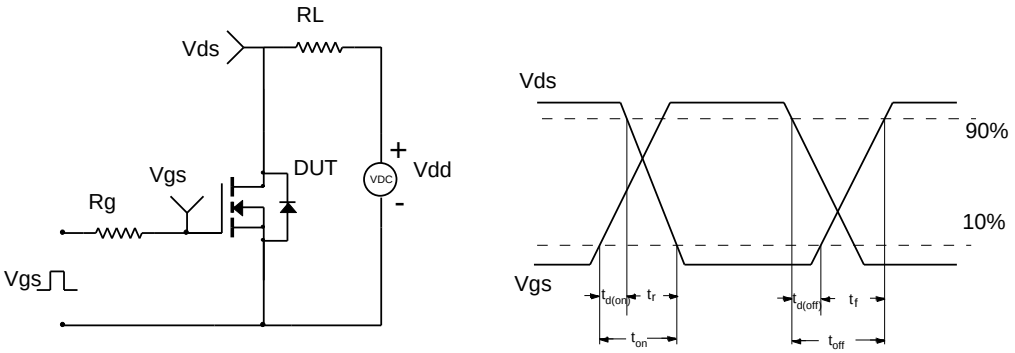

Figure C: Unclamped Inductive Switching (UIS) Test Circuit & Waveforms

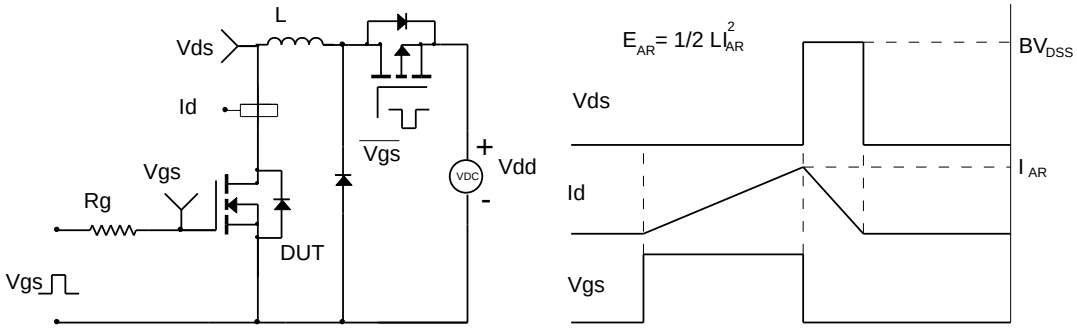

Figure D: Diode Recovery Test Circuit & Waveforms

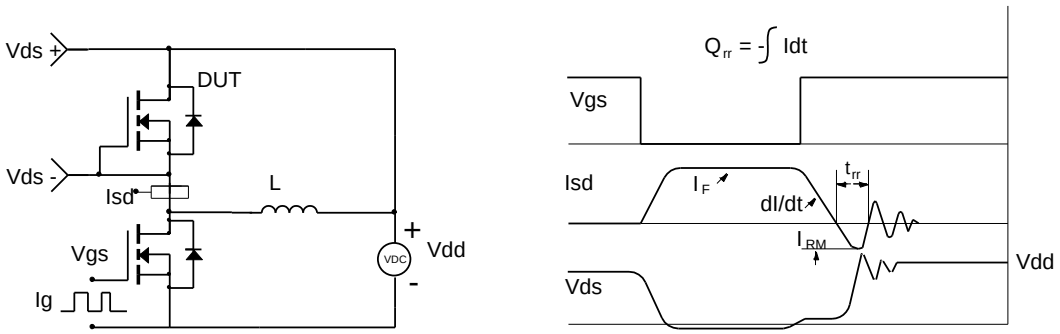

ENTEGRECİ

Bu belge www.entegreci.com üzerinden sunulmaktadır.

Elektronik komponent tedarikinde Entegreci

Entegreci, Eskişehir merkezli, Türkiye geneline satış yapan bir elektronik komponent mağazasıdır. Entegreler (IC), mikrodenetleyiciler, transistörler, diyotlar, pasif elemanlar, konnektörler, modüller ve geliştirme kartları tek adetten seri üretim adetlerine kadar satılır. Ürün sayfalarında güncel stok durumunu, fiyatı ve datasheet bağlantısını bulabilirsiniz.

Parça koduyla arama

Üretici parça numarasını yazın; stok ve fiyatı hemen görün.

www.entegreci.com

Ürün kategorileri

Entegreden kapasitöre tüm elektronik komponent kategorileri.

Kategorilere göz atın

Üreticiler

Aradığınız üreticinin ürünlerini tek sayfada inceleyin.

Üreticileri görün

Toplu alım ve teklif

Listede olmayan ya da yüksek adetli parçalar için teklif isteyin.

Teklif isteyin

www.entegreci.com | **destek@entegreci.com** | **0850 305 90 34**

Entegreci is an online electronic components store based in Türkiye. Search by manufacturer part number to see stock, prices and datasheets for integrated circuits, microcontrollers, transistors, passive components and connectors, or request a quote for parts that are not listed.

Bu sayfa Entegreci tarafından eklenmiştir. Belgenin önceki sayfaları asıl yayıncısına aittir ve içeriği değiştirilmemiştir; en güncel sürüm için belgenin yayıncısına başvurun.