ALPHA & OMEGA SEMICONDUCTOR

AOTF18N65

650V,18A N-Channel MOSFET

General Description

The AOTF18N65 is fabricated using an advanced high voltage MOSFET process that is designed to deliver high levels of performance and robustness in popular AC-DC applications.By providing low $R_{DS(on)}$, C_{iss} and C_{rss} along with guaranteed avalanche capability this part can be adopted quickly into new and existing offline power supply designs.

For Halogen Free add "L" suffix to part number: AOTF18N65L

Product Summary

V_{DS}	750V@150℃
I_D (at V_{GS}=10V)	18A
$R_{DS(ON)}$ (at V_{GS}=10V)	< 0.39Ω

100% UIS Tested
100% R_g Tested

RoHS Compliant

Top View

TO-220F

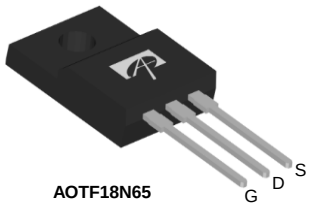

AOTF18N65

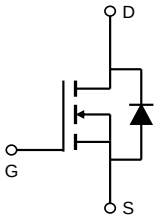

Absolute Maximum Ratings T_A=25°C unless otherwise noted

Parameter		Symbol	AOTF18N65	Units
Drain-Source Voltage		V_{DS}	650	V
Gate-Source Voltage		V_{GS}	±30	V
Continuous Drain Current	T_C=25°C	I_D	18*	A
	T_C=100°C		12*	
Pulsed Drain Current [C]		I_{DM}	80	
Avalanche Current [C]		I_{AR}	6.3	A
Repetitive avalanche energy [C]		E_{AR}	595	mJ
Single pulsed avalanche energy [G]		E_{AS}	1190	mJ
Peak diode recovery dv/dt		dv/dt	5	V/ns
Power Dissipation [B]	T_C=25°C	P_D	50	W
	Derate above 25°C		0.4	W/ °C
Junction and Storage Temperature Range		T_J, T_{STG}	-55 to 150	°C
Maximum lead temperature for soldering purpose, 1/8" from case for 5 seconds		T_L	300	°C

Thermal Characteristics

Parameter	Symbol	AOTF18N65	Units
Maximum Junction-to-Ambient [A,D]	$R_{\theta JA}$	65	°C/W
Maximum Junction-to-Case	$R_{\theta JC}$	2.5	°C/W

* Drain current limited by maximum junction temperature.

Electrical Characteristics (T_J=25°C unless otherwise noted)

Symbol	Parameter	Conditions	Min	Typ	Max	Units
STATIC PARAMETERS						
BV_{DSS}	Drain-Source Breakdown Voltage	I_D=250µA, V_{GS}=0V, T_J=25°C	650			V
		I_D=250µA, V_{GS}=0V, T_J=150°C		750		
BV_{DSS} /ΔTJ	Breakdown Voltage Temperature Coefficient	I_D=250µA, V_{GS}=0V		0.7		V/ °C
I_{DSS}	Zero Gate Voltage Drain Current	V_{DS}=650V, V_{GS}=0V			1	µA
		V_{DS}=520V, T_J=125°C			10	
I_{GSS}	Gate-Body leakage current	V_{DS}=0V, V_{GS}=±30V			±100	nA
$V_{GS(th)}$	Gate Threshold Voltage	V_{DS}=5V, I_D=250µA	2.9	3.5	4.5	V
$R_{DS(ON)}$	Static Drain-Source On-Resistance	V_{GS}=10V, I_D=9A		0.32	0.39	Ω
g_{FS}	Forward Transconductance	V_{DS}=40V, I_D=9A		20		S
V_{SD}	Diode Forward Voltage	I_S=1A,V_{GS}=0V		0.69	1	V
I_S	Maximum Body-Diode Continuous Current*				18	A
I_{SM}	Maximum Body-Diode Pulsed Current				80	A
DYNAMIC PARAMETERS						
C_{iss}	Input Capacitance	V_{GS}=0V, V_{DS}=25V, f=1MHz	2270	3027	3785	pF
C_{oss}	Output Capacitance		170	271	370	pF
C_{rss}	Reverse Transfer Capacitance		12	22	32	pF
R_g	Gate resistance	V_{GS}=0V, V_{DS}=0V, f=1MHz	0.7	1.4	2.1	Ω
SWITCHING PARAMETERS						
Q_g	Total Gate Charge	V_{GS}=10V, V_{DS}=520V, I_D=18A	44	56	68	nC
Q_{gs}	Gate Source Charge		9	12.4	15	nC
Q_{gd}	Gate Drain Charge		9	19.6	30	nC
$t_{D(on)}$	Turn-On DelayTime	V_{GS}=10V, V_{DS}=325V, I_D=18A, R_G=25Ω		54		ns
t_r	Turn-On Rise Time			83		ns
$t_{D(off)}$	Turn-Off DelayTime			149		ns
t_f	Turn-Off Fall Time			71		ns
t_{rr}	Body Diode Reverse Recovery Time	I_F=18A,dI/dt=100A/µs,V_{DS}=100V	520	655	790	ns
Q_{rr}	Body Diode Reverse Recovery Charge	I_F=18A,dI/dt=100A/µs,V_{DS}=100V	8	10	12	µC

A. The value of $R_{\theta JA}$ is measured with the device in a still air environment with T_A =25° C.
B. The power dissipation P_D is based on $T_{J(MAX)}$=150° C, using junction-to-case thermal resistance, and is more useful in setting the upper dissipation limit for cases where additional heatsinking is used.
C. Repetitive rating, pulse width limited by junction temperature $T_{J(MAX)}$=150° C, Ratings are based on low frequency and duty cycles to keep initial T_J =25° C.
D. The $R_{\theta JA}$ is the sum of the thermal impedance from junction to case $R_{\theta JC}$ and case to ambient.
E. The static characteristics in Figures 1 to 6 are obtained using <300 µs pulses, duty cycle 0.5% max.
F. These curves are based on the junction-to-case thermal impedance which is measured with the device mounted to a large heatsink, assuming a maximum junction temperature of $T_{J(MAX)}$=150° C. The SOA curve provides a single pulse rating.
G. L=60mH, I_{AS}=6.3A, V_{DD}=150V, R_G=25Ω, Starting T_J=25° C

APPLICATIONS OR USES AS CRITICAL COMPONENTS IN LIFE SUPPORT DEVICES OR SYSTEMS ARE NOT AUTHORIZED. AOS DOES NOT ASSUME ANY LIABILITY ARISING OUT OF SUCH APPLICATIONS OR USES OF ITS PRODUCTS. AOS RESERVES THE RIGHT TO MAKE CHANGES TO PRODUCT SPECIFICATIONS WITHOUT NOTICE. IT IS THE RESPONSIBILITY OF THE CUSTOMER TO EVALUATE SUITABILITY OF THE PRODUCT FOR THEIR INTENDED APPLICATION. CUSTOMER SHALL COMPLY WITH APPLICABLE LEGAL REQUIREMENTS, INCLUDING ALL APPLICABLE EXPORT CONTROL RULES, REGULATIONS AND LIMITATIONS.

AOS' products are provided subject to AOS' terms and conditions of sale which are set forth at:
http://www.aosmd.com/terms_and_conditions_of_sale

TYPICAL ELECTRICAL AND THERMAL CHARACTERISTICS

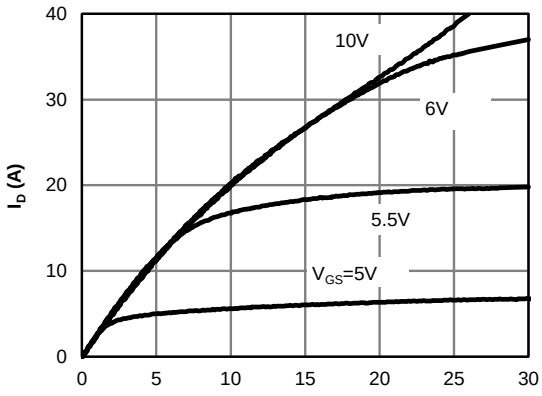

Fig 1: On-Region Characteristics

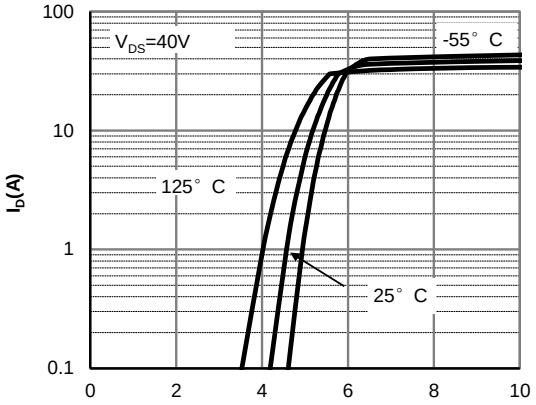

Figure 2: Transfer Characteristics

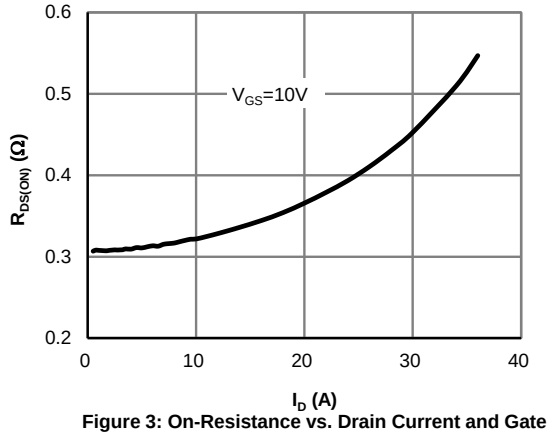

Figure 3: On-Resistance vs. Drain Current and Gate Voltage

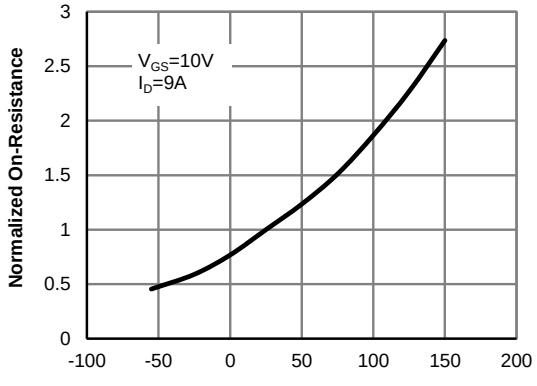

Figure 4: On-Resistance vs. Junction Temperature

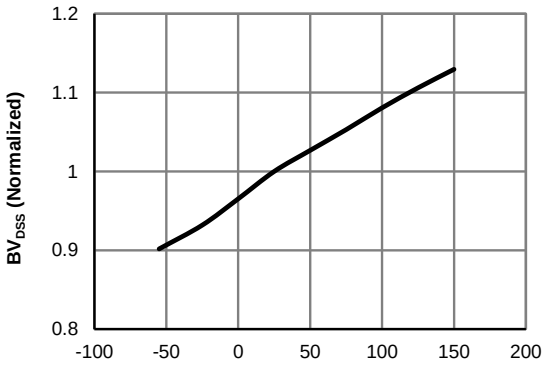

Figure 5:Break Down vs. Junction Temperature

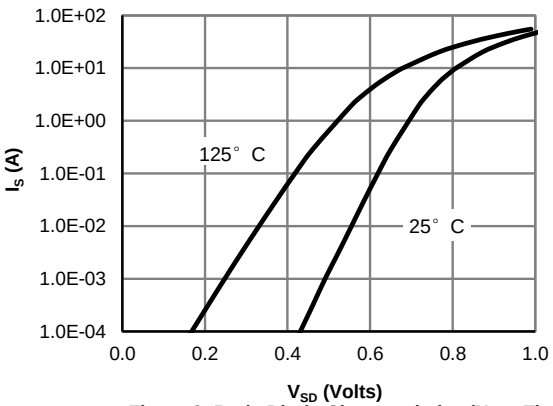

Figure 6: Body-Diode Characteristics (Note E)

TYPICAL ELECTRICAL AND THERMAL CHARACTERISTICS

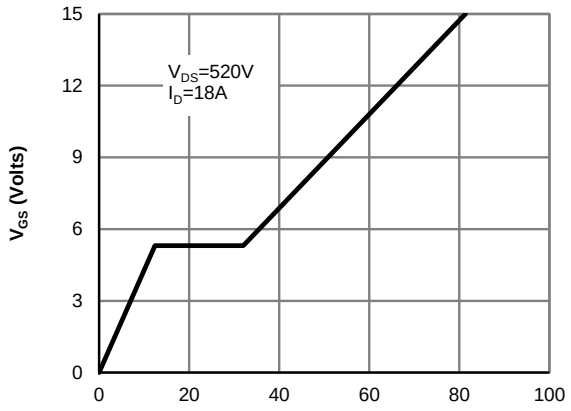

Figure 7: Gate-Charge Characteristics

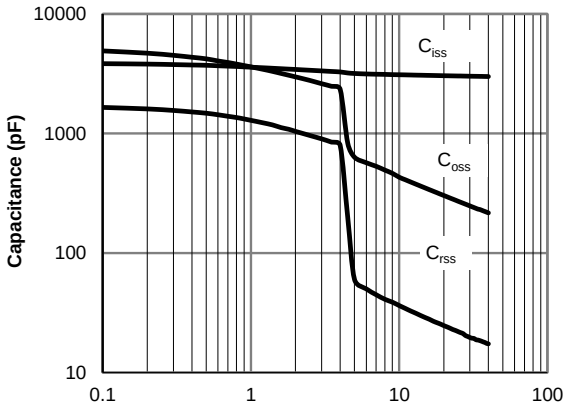

Figure 8: Capacitance Characteristics

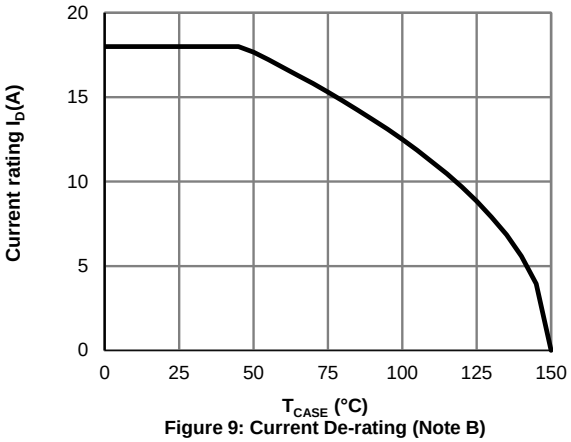

Figure 9: Current De-rating (Note B)

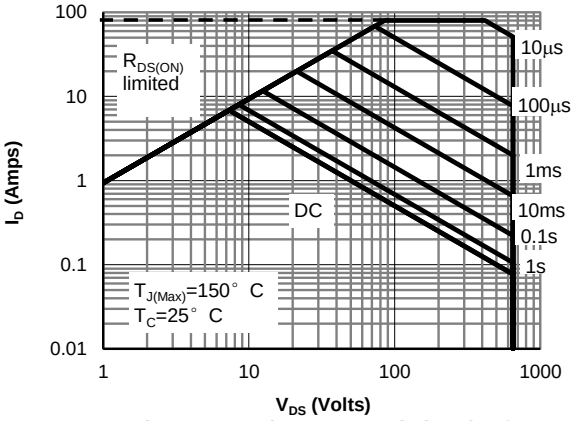

Figure 10: Maximum Forward Biased Safe Operating Area for AOTF18N65 (Note F)

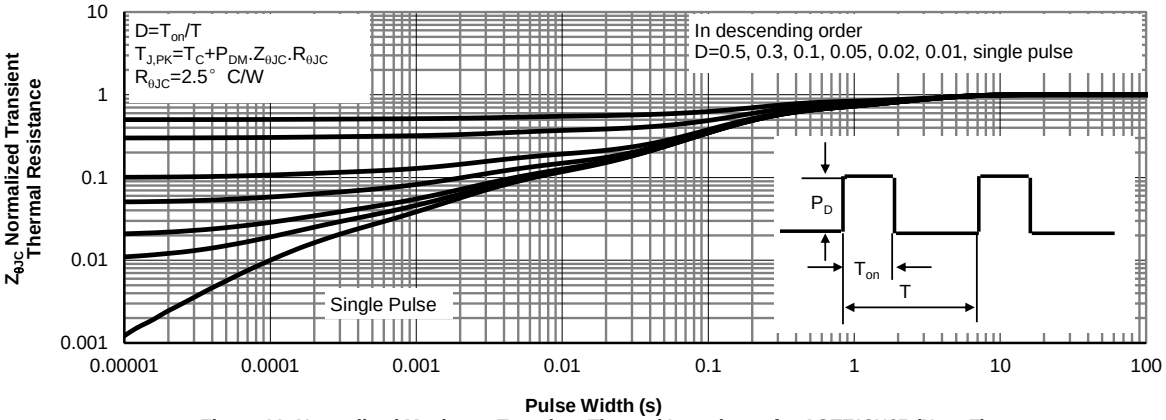

Figure 11: Normalized Maximum Transient Thermal Impedance for AOTF18N65 (Note F)

Gate Charge Test Circuit & Waveform

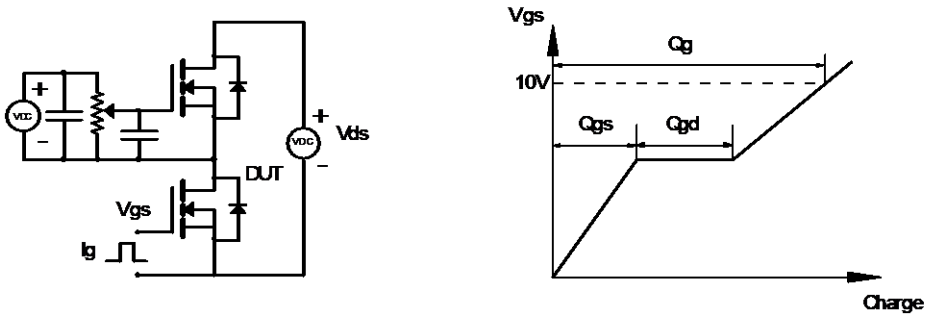

Resistive Switching Test Circuit & Waveforms

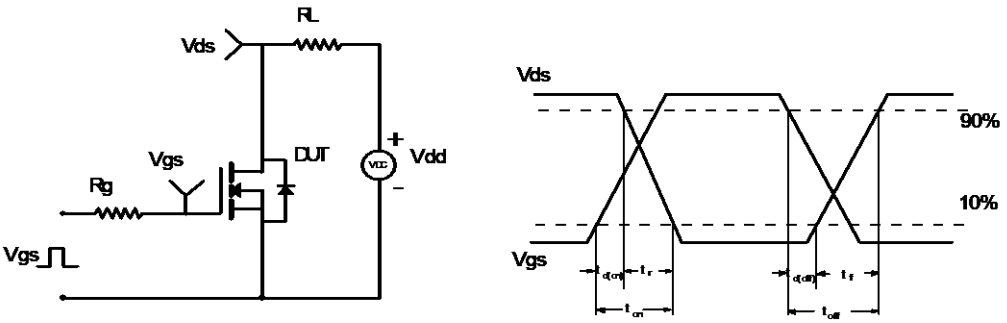

Unclamped Inductive Switching (UIS) Test Circuit & Waveforms

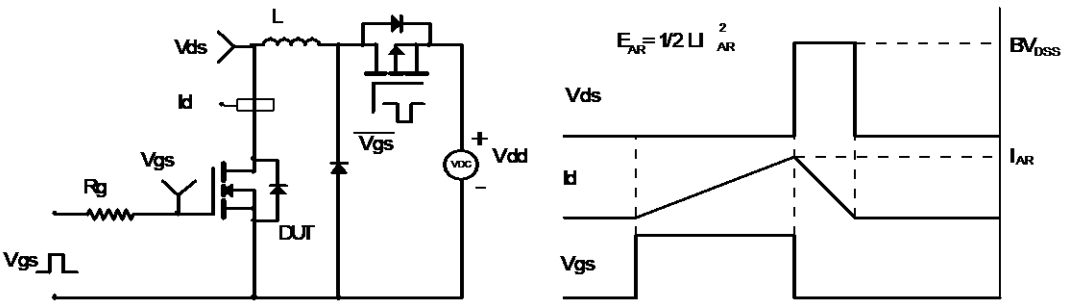

Diode Recovery Test Circuit & Waveforms

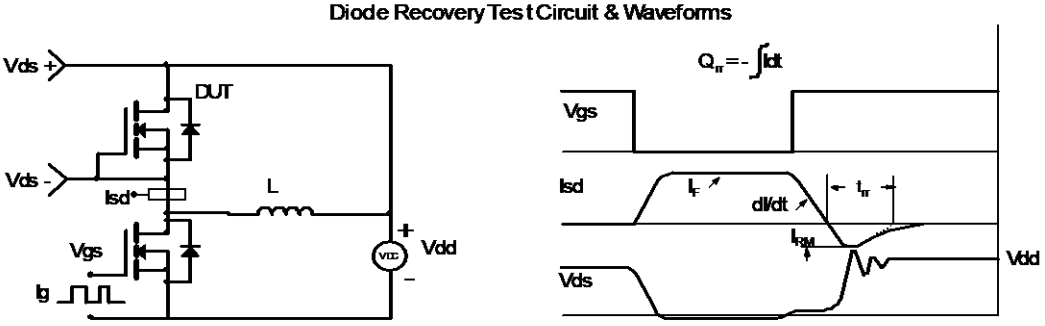

ENTEGRECİ

Bu belge www.entegreci.com üzerinden sunulmaktadır.

Elektronik komponent tedarikinde Entegreci

Entegreci, Eskişehir merkezli, Türkiye geneline satış yapan bir elektronik komponent mağazasıdır. Entegreler (IC), mikrodenetleyiciler, transistörler, diyotlar, pasif elemanlar, konnektörler, modüller ve geliştirme kartları tek adetten seri üretim adetlerine kadar satılır. Ürün sayfalarında güncel stok durumunu, fiyatı ve datasheet bağlantısını bulabilirsiniz.

Parça koduyla arama

Üretici parça numarasını yazın; stok ve fiyatı hemen görün.

www.entegreci.com

Ürün kategorileri

Entegreden kapasitöre tüm elektronik komponent kategorileri.

Kategorilere göz atın

Üreticiler

Aradığınız üreticinin ürünlerini tek sayfada inceleyin.

Üreticileri görün

Toplu alım ve teklif

Listede olmayan ya da yüksek adetli parçalar için teklif isteyin.

Teklif isteyin

www.entegreci.com | **destek@entegreci.com** | **0850 305 90 34**

Entegreci is an online electronic components store based in Türkiye. Search by manufacturer part number to see stock, prices and datasheets for integrated circuits, microcontrollers, transistors, passive components and connectors, or request a quote for parts that are not listed.

Bu sayfa Entegreci tarafından eklenmiştir. Belgenin önceki sayfaları asıl yayıncısına aittir ve içeriği değiştirilmemiştir; en güncel sürüm için belgenin yayıncısına başvurun.