ALPHA & OMEGA SEMICONDUCTOR

AOTF12T50P

500V,12A N-Channel MOSFET

General Description

- Latest Trench Power AlphaMOS-II technology
- Low $R_{DS(ON)}$
- Low Ciss and Crss
- High Current Capability
- RoHS and Halogen Free Compliant

Applications

- General Lighting for LED and CCFL
- AC/DC Power supplies for Industrial, Consumer, and Telecom

Product Summary

V_{DS} @ $T_{j,max}$	600V
I_{DM}	48A
$R_{DS(ON),max}$	< 0.5Ω
$Q_{g,typ}$	22nC
E_{oss} @ 400V	4µJ

100% UIS Tested
100% R_g Tested

RoHS Compliant

TO-220F

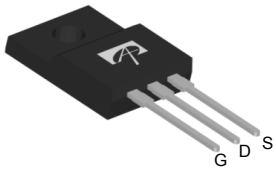

AOTF12T50P

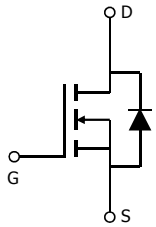

Orderable Part Number	Package Type	Form	Minimum Order Quantity
AOTF12T50P	TO-220F Pb Free	Tube	1000
AOTF12T50PL	TO-220F Green	Tube	1000

Absolute Maximum Ratings T_A=25°C unless otherwise noted

Parameter		Symbol	AOTF12T50P	AOTF12T50PL	Units
Drain-Source Voltage		V_{DS}	500		V
Gate-Source Voltage		V_{GS}	±30		V
Continuous Drain Current	T_C=25°C	I_D	12*		A
	T_C=100°C		8*		
Pulsed Drain Current [C]		I_{DM}	48		
Avalanche Current [C] L=1mH		I_{AR}	12		A
Repetitive avalanche energy [C]		E_{AR}	72		mJ
Single pulsed avalanche energy [G]		E_{AS}	480		mJ
MOSFET dv/dt ruggedness		dv/dt	50		V/ns
Peak diode recovery dv/dt			5		
Power Dissipation [B]	T_C=25°C	P_D	43	33	W
	Derate above 25°C		0.3	0.26	
Junction and Storage Temperature Range		T_J, T_{STG}	-55 to 150		°C
Maximum lead temperature for soldering purpose, 1/8" from case for 5 seconds		T_L	300		°C

Thermal Characteristics

Parameter	Symbol	AOTF12T50P	AOTF12T50PL	Units
Maximum Junction-to-Ambient [A,D]	$R_{\theta JA}$	65	65	°C/W
Maximum Junction-to-Case	$R_{\theta JC}$	2.9	3.8	°C/W

* Drain current limited by maximum junction temperature.

Electrical Characteristics (T_J=25°C unless otherwise noted)

Symbol	Parameter	Conditions	Min	Typ	Max	Units
STATIC PARAMETERS						
BV_{DSS}	Drain-Source Breakdown Voltage	I_D=250µA, V_{GS}=0V, T_J=25°C	500			V
		I_D=250µA, V_{GS}=0V, T_J=150°C		600		
BV_{DSS} /ΔTJ	Breakdown Voltage Temperature Coefficient	I_D=250µA, V_{GS}=0V		0.47		V/°C
I_{DSS}	Zero Gate Voltage Drain Current	V_{DS}=500V, V_{GS}=0V			1	µA
		V_{DS}=400V, T_J=125°C			10	
I_{GSS}	Gate-Body leakage current	V_{DS}=0V, V_{GS}=±30V			±100	nA
$V_{GS(th)}$	Gate Threshold Voltage	V_{DS}=5V, I_D=250µA	3	4	5	V
$R_{DS(ON)}$	Static Drain-Source On-Resistance	V_{GS}=10V, I_D=6A		0.39	0.5	Ω
g_{FS}	Forward Transconductance	V_{DS}=40V, I_D=6A		10		S
V_{SD}	Diode Forward Voltage	I_S=1A,V_{GS}=0V		0.74	1	V
I_S	Maximum Body-Diode Continuous Current				12	A
I_{SM}	Maximum Body-Diode Pulsed Current [C]				48	A
DYNAMIC PARAMETERS						
C_{iss}	Input Capacitance	V_{GS}=0V, V_{DS}=100V, f=1MHz		1477		pF
C_{oss}	Output Capacitance			63		pF
$C_{o(er)}$	Effective output capacitance, energy related [H]	V_{GS}=0V, V_{DS}=0 to 400V, f=1MHz		50		pF
$C_{o(tr)}$	Effective output capacitance, time related [I]			90		pF
C_{rss}	Reverse Transfer Capacitance	V_{GS}=0V, V_{DS}=100V, f=1MHz		6.3		pF
R_g	Gate resistance	f=1MHz		2		Ω
SWITCHING PARAMETERS						
Q_g	Total Gate Charge	V_{GS}=10V, V_{DS}=400V, I_D=12A		22	32	nC
Q_{gs}	Gate Source Charge			8		nC
Q_{gd}	Gate Drain Charge			5.5		nC
$t_{D(on)}$	Turn-On DelayTime	V_{GS}=10V, V_{DS}=250V, I_D=12A, R_G=25Ω		37		ns
t_r	Turn-On Rise Time			54		ns
$t_{D(off)}$	Turn-Off DelayTime			46		ns
t_f	Turn-Off Fall Time			28		ns
t_{rr}	Body Diode Reverse Recovery Time	I_F=12A,dI/dt=100A/µs,V_{DS}=100V		428		ns
Q_{rr}	Body Diode Reverse Recovery Charge	I_F=12A,dI/dt=100A/µs,V_{DS}=100V		6.1		µC

A. The value of $R_{\theta JA}$ is measured with the device in a still air environment with T_A=25° C.
B. The power dissipation P_D is based on $T_{J(MAX)}$=150° C, using junction-to-case thermal resistance, and is more useful in setting the upper dissipation limit for cases where additional heatsinking is used.
C. Repetitive rating, pulse width limited by junction temperature $T_{J(MAX)}$=150° C, Ratings are based on low frequency and duty cycles to keep initial T_J =25° C.
D. The R_{qJA} is the sum of the thermal impedance from junction to case $R_{\theta JC}$ and case to ambient.
E. The static characteristics in Figures 1 to 6 are obtained using <300 ms pulses, duty cycle 0.5% max.
F. These curves are based on the junction-to-case thermal impedance which is measured with the device mounted to a large heatsink, assuming a maximum junction temperature of $T_{J(MAX)}$=150° C. The SOA curve provides a single pulse rating.
G. L=60mH, I_{AS}=4A, V_{DD}=150V, R_G=25Ω, Starting T_J=25° C.
H. $C_{o(er)}$ is a fixed capacitance that gives the same stored energy as C_{oss} while V_{DS} is rising from 0 to 80% $V_{(BR)DSS}$.
I. $C_{o(tr)}$ is a fixed capacitance that gives the same charging time as C_{oss} while V_{DS} is rising from 0 to 80% $V_{(BR)DSS}$.

THIS PRODUCT HAS BEEN DESIGNED AND QUALIFIED FOR THE CONSUMER MARKET. APPLICATIONS OR USES AS CRITICAL COMPONENTS IN LIFE SUPPORT DEVICES OR SYSTEMS ARE NOT AUTHORIZED. AOS DOES NOT ASSUME ANY LIABILITY ARISING OUT OF SUCH APPLICATIONS OR USES OF ITS PRODUCTS. AOS RESERVES THE RIGHT TO IMPROVE PRODUCT DESIGN, FUNCTIONS AND RELIABILITY WITHOUT NOTICE.

TYPICAL ELECTRICAL AND THERMAL CHARACTERISTICS

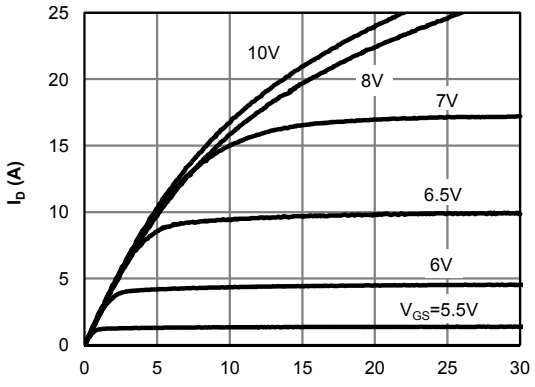

Figure 1: On-Region Characteristics

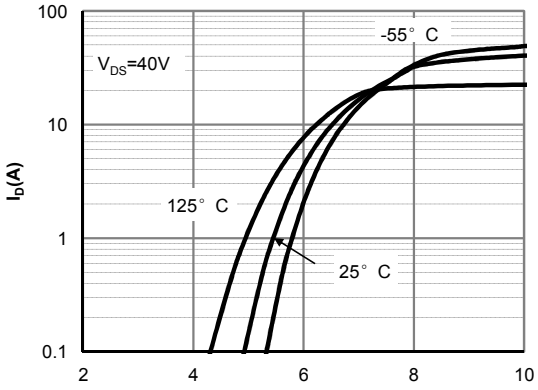

Figure 2: Transfer Characteristics

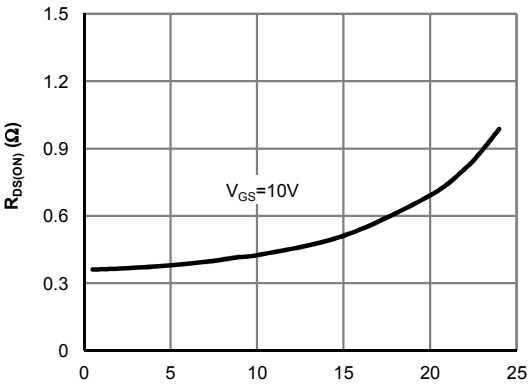

Figure 3: On-Resistance vs. Drain Current and Gate Voltage

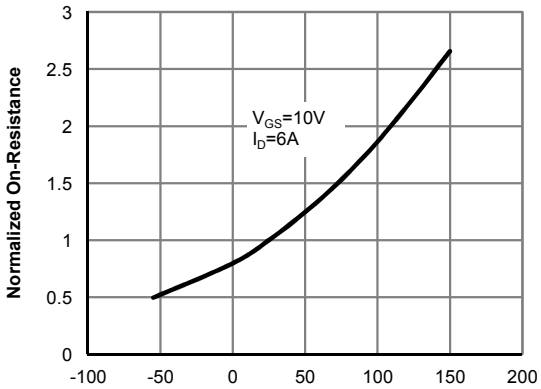

Figure 4: On-Resistance vs. Junction Temperature

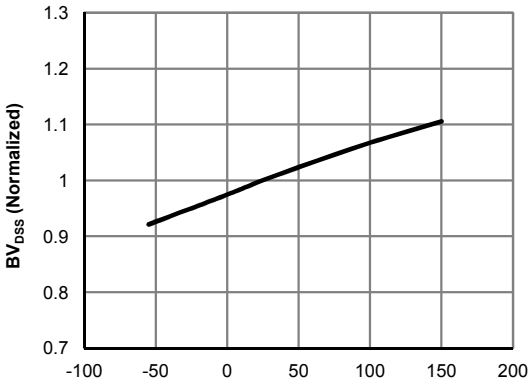

Figure 5: Break Down vs. Junction Temperature

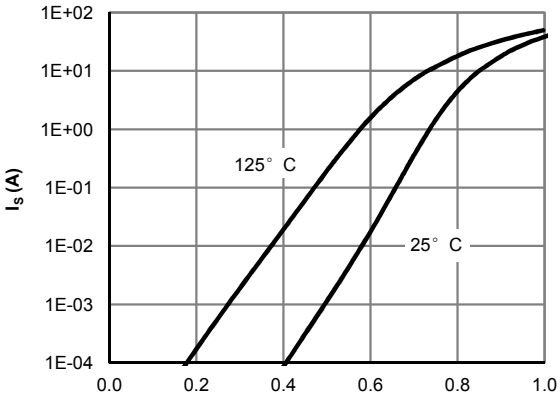

Figure 6: Body-Diode Characteristics

TYPICAL ELECTRICAL AND THERMAL CHARACTERISTICS

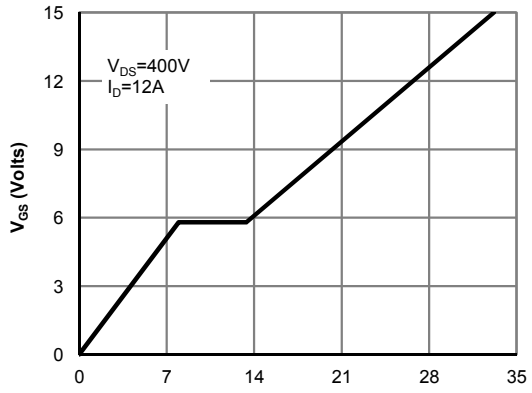

Figure 7: Gate-Charge Characteristics

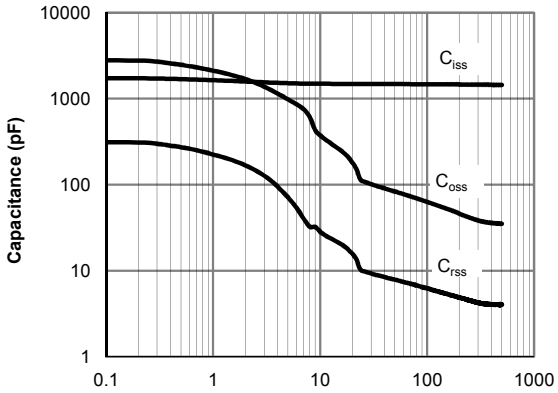

Figure 8: Capacitance Characteristics

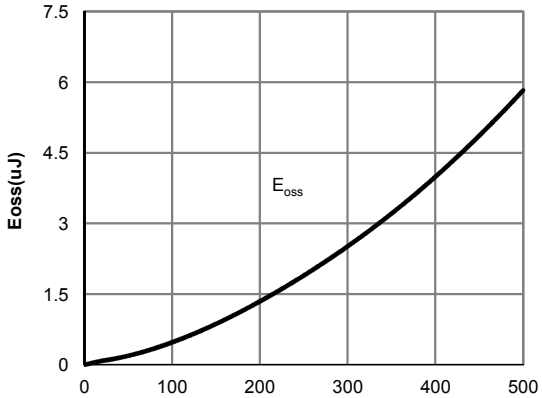

Figure 9: Coss stored Energy

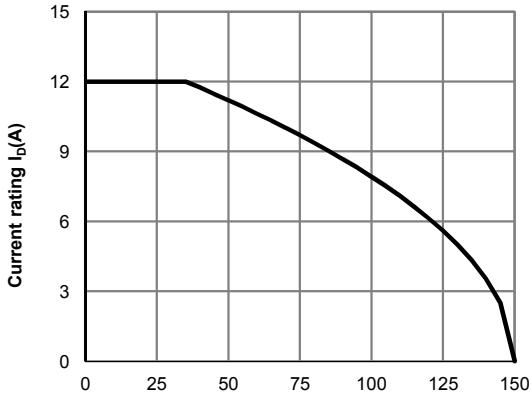

Figure 10: Current De-rating (Note F)

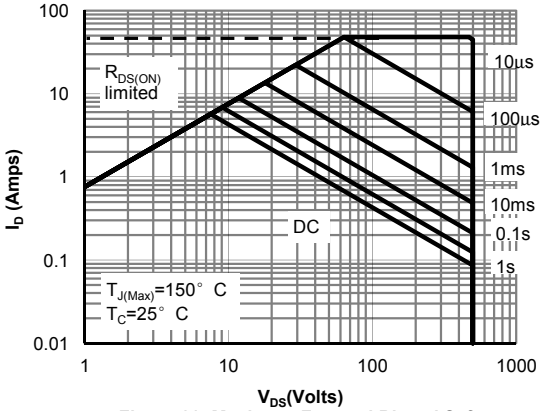

Figure 11: Maximum Forward Biased Safe Operating Area for TO-220F Pb Free (Note F)

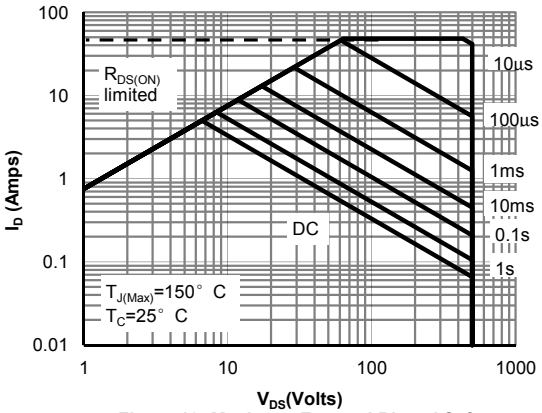

Figure 12: Maximum Forward Biased Safe Operating Area for TO-220F Green (Note F)

TYPICAL ELECTRICAL AND THERMAL CHARACTERISTICS

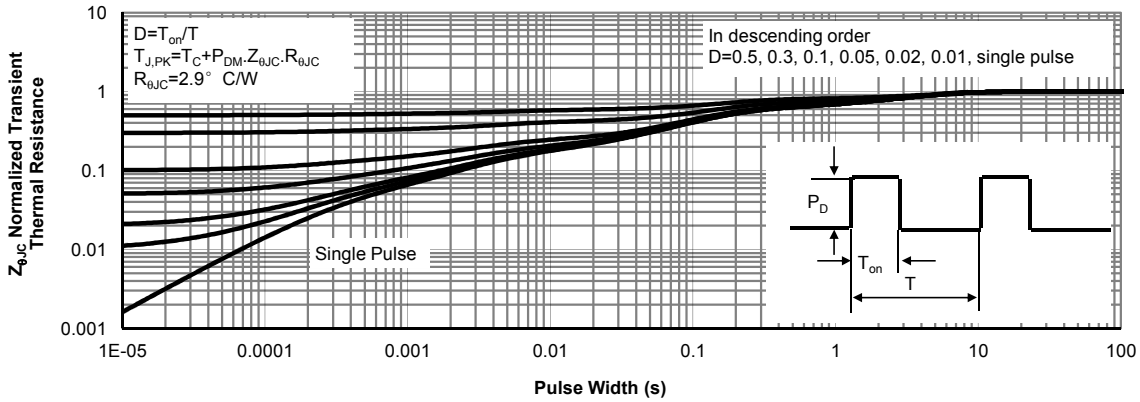

Figure 13: Normalized Maximum Transient Thermal Impedance for TO-220F Pb Free (Note F)

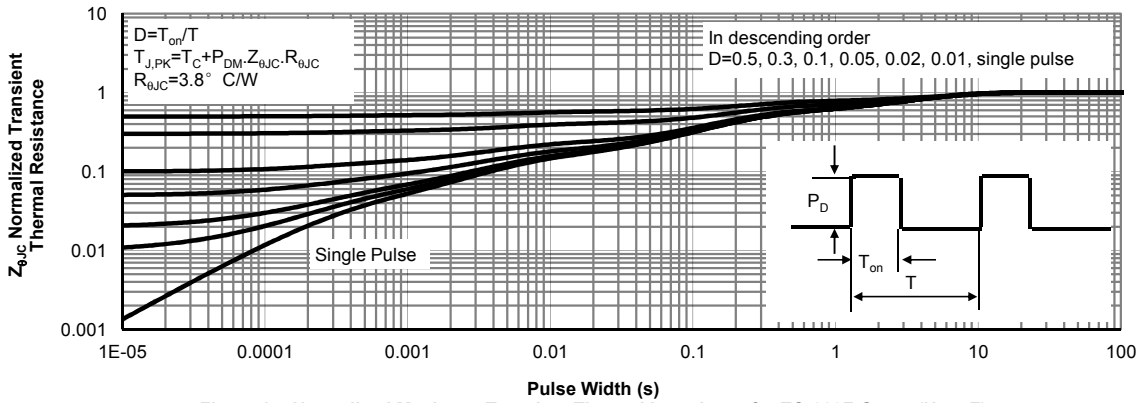

Figure 14: Normalized Maximum Transient Thermal Impedance for TO-220F Green (Note F)

Gate Charge Test Circuit & Waveform

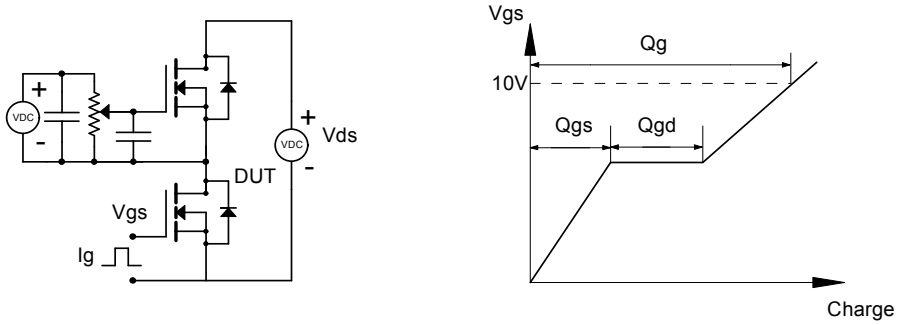

Resistive Switching Test Circuit & Waveforms

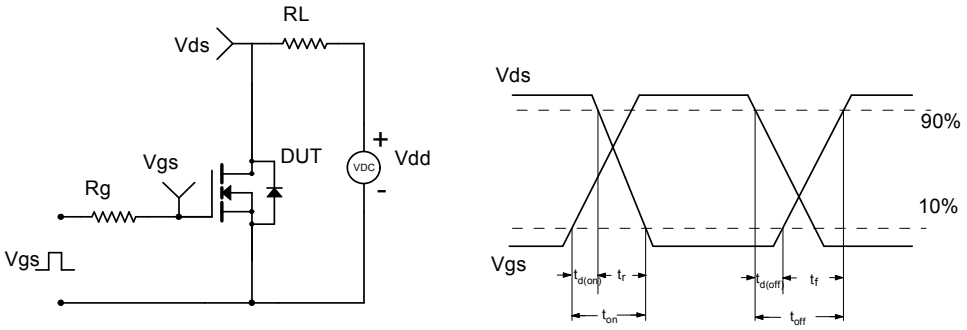

Unclamped Inductive Switching (UIS) Test Circuit & Waveforms

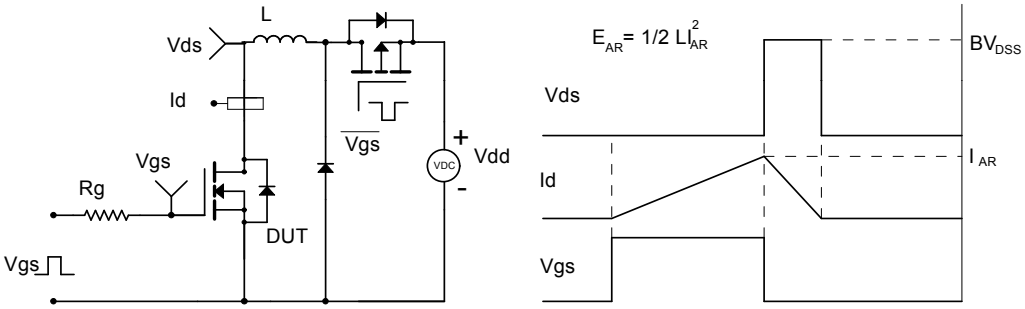

Diode Recovery Test Circuit & Waveforms

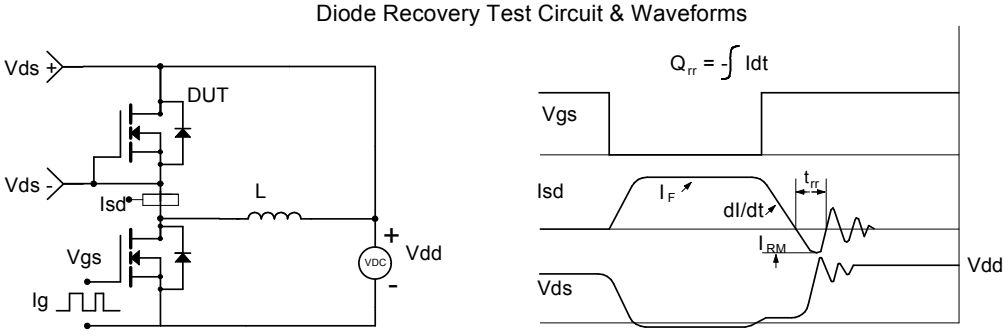

ENTEGRECİ

Bu belge www.entegreci.com üzerinden sunulmaktadır.

Elektronik komponent tedarikinde Entegreci

Entegreci, Eskişehir merkezli, Türkiye geneline satış yapan bir elektronik komponent mağazasıdır. Entegreler (IC), mikrodenetleyiciler, transistörler, diyotlar, pasif elemanlar, konnektörler, modüller ve geliştirme kartları tek adetten seri üretim adetlerine kadar satılır. Ürün sayfalarında güncel stok durumunu, fiyatı ve datasheet bağlantısını bulabilirsiniz.

Parça koduyla arama

Üretici parça numarasını yazın; stok ve fiyatı hemen görün.

www.entegreci.com

Ürün kategorileri

Entegreden kapasitöre tüm elektronik komponent kategorileri.

Kategorilere göz atın

Üreticiler

Aradığınız üreticinin ürünlerini tek sayfada inceleyin.

Üreticileri görün

Toplu alım ve teklif

Listede olmayan ya da yüksek adetli parçalar için teklif isteyin.

Teklif isteyin

www.entegreci.com | **destek@entegreci.com** | **0850 305 90 34**

Entegreci is an online electronic components store based in Türkiye. Search by manufacturer part number to see stock, prices and datasheets for integrated circuits, microcontrollers, transistors, passive components and connectors, or request a quote for parts that are not listed.

Bu sayfa Entegreci tarafından eklenmiştir. Belgenin önceki sayfaları asıl yayıncısına aittir ve içeriği değiştirilmemiştir; en güncel sürüm için belgenin yayıncısına başvurun.