ALPHA & OMEGA SEMICONDUCTOR

AON7262E

60V N-Channel AlphaSGT™

General Description

- Trench Power AlphaSGT™ technology
- Low $R_{DS(ON)}$
- Low Gate Charge
- ESD protected

Applications

- High efficiency power supply
- Secondary synchronus rectifier

Product Summary

V_{DS}	60V
I_D (at V_{GS}=10V)	34A
$R_{DS(ON)}$ (at V_{GS}=10V)	< 6.2mΩ
$R_{DS(ON)}$ (at V_{GS}=4.5V)	< 8.5mΩ
Typical ESD protection	**HBM Class 2**

100% UIS Tested
100% Rg Tested

Green Product

DFN 3x3 EP

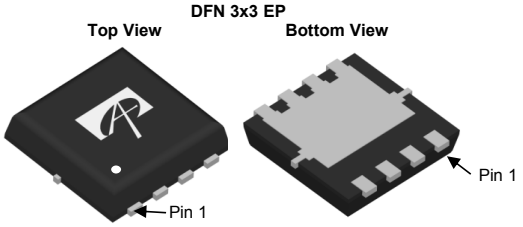

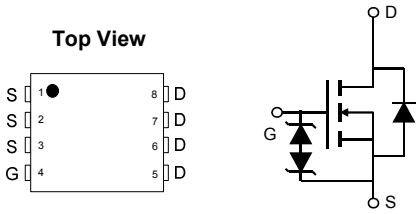

Orderable Part Number	Package Type	Form	Minimum Order Quantity
AON7262E	DFN 3x3 EP	Tape & Reel	5000

Absolute Maximum Ratings T_A=25°C unless otherwise noted

Parameter		Symbol	Maximum	Units
Drain-Source Voltage		V_{DS}	60	V
Gate-Source Voltage		V_{GS}	±20	V
Continuous Drain Current [G]	T_C=25°C	I_D	34	A
	T_C=100°C		34	
Pulsed Drain Current [C]		I_{DM}	135	
Continuous Drain Current	T_A=25°C	I_{DSM}	21	A
	T_A=70°C		17	
Avalanche Current [C]		I_{AS}	23	A
Avalanche energy	L=0.3mH [C]	E_{AS}	79	mJ
V_{DS} Spike [I]	10µs	V_{SPIKE}	72	V
Power Dissipation [B]	T_C=25°C	P_D	43	W
	T_C=100°C		17	
Power Dissipation [A]	T_A=25°C	P_{DSM}	5.0	W
	T_A=70°C		3.2	
Junction and Storage Temperature Range		T_J, T_{STG}	-55 to 150	°C

Thermal Characteristics

Parameter		Symbol	Typ	Max	Units
Maximum Junction-to-Ambient [A]	t ≤ 10s	$R_{\theta JA}$	20	25	°C/W
Maximum Junction-to-Ambient [A D]	Steady-State		45	55	°C/W
Maximum Junction-to-Case	Steady-State	$R_{\theta JC}$	2.4	2.9	°C/W

Electrical Characteristics (T_J=25°C unless otherwise noted)

Symbol	Parameter	Conditions	Min	Typ	Max	Units
STATIC PARAMETERS						
BV_{DSS}	Drain-Source Breakdown Voltage	I_D=250µA, V_{GS}=0V	60			V
I_{DSS}	Zero Gate Voltage Drain Current	V_{DS}=60V, V_{GS}=0V			1	µA
		T_J=55°C			5	
I_{GSS}	Gate-Body leakage current	V_{DS}=0V, V_{GS}=±20V			±10	µA
$V_{GS(th)}$	Gate Threshold Voltage	V_{DS}=V_{GS}, I_D=250µA	1.2	1.65	2.2	V
$R_{DS(ON)}$	Static Drain-Source On-Resistance	V_{GS}=10V, I_D=20A		4.8	6.2	mΩ
		T_J=125°C		7.8	10	
		V_{GS}=4.5V, I_D=18A		6.2	8.5	mΩ
g_{FS}	Forward Transconductance	V_{DS}=5V, I_D=20A		75		S
V_{SD}	Diode Forward Voltage	I_S=1A, V_{GS}=0V		0.7	1	V
I_S	Maximum Body-Diode Continuous Current [G]				34	A
DYNAMIC PARAMETERS						
C_{iss}	Input Capacitance	V_{GS}=0V, V_{DS}=30V, f=1MHz		1652		pF
C_{oss}	Output Capacitance			520		pF
C_{rss}	Reverse Transfer Capacitance			52		pF
R_g	Gate resistance	f=1MHz	0.6	1.3	2.0	Ω
SWITCHING PARAMETERS						
Q_g(10V)	Total Gate Charge	V_{GS}=10V, V_{DS}=30V, I_D=20A		30	45	nC
Q_g(4.5V)	Total Gate Charge			15	25	nC
Q_{gs}	Gate Source Charge			3.5		nC
Q_{gd}	Gate Drain Charge			6.5		nC
$t_{D(on)}$	Turn-On DelayTime	V_{GS}=10V, V_{DS}=30V, R_L=1.5Ω, R_{GEN}=3Ω		6		ns
t_r	Turn-On Rise Time			5		ns
$t_{D(off)}$	Turn-Off DelayTime			29		ns
t_f	Turn-Off Fall Time			7		ns
t_{rr}	Body Diode Reverse Recovery Time	I_F=20A, di/dt=500A/µs		19		ns
Q_{rr}	Body Diode Reverse Recovery Charge	I_F=20A, di/dt=500A/µs		60		nC

A. The value of $R_{\theta JA}$ is measured with the device mounted on 1in² FR-4 board with 2oz. Copper, in a still air environment with T_A =25° C. The Power dissipation P_{DSM} is based on $R_{\theta JA}$ t≤ 10s and the maximum allowed junction temperature of 150° C. The value in any given application depends on the user's specific board design.
B. The power dissipation P_D is based on $T_{J(MAX)}$=150° C, using junction-to-case thermal resistance, and is more useful in setting the upper dissipation limit for cases where additional heatsinking is used.
C. Single pulse width limited by junction temperature $T_{J(MAX)}$=150° C.
D. The $R_{\theta JA}$ is the sum of the thermal impedance from junction to case $R_{\theta JC}$ and case to ambient.
E. The static characteristics in Figures 1 to 6 are obtained using <300µs pulses, duty cycle 0.5% max.
F. These curves are based on the junction-to-case thermal impedance which is measured with the device mounted to a large heatsink, assuming a maximum junction temperature of $T_{J(MAX)}$=150° C. The SOA curve provides a single pulse rating.
G. The maximum current rating is package limited.
H. These tests are performed with the device mounted on 1 in² FR-4 board with 2oz. Copper, in a still air environment with T_A=25° C.
I. The spike duty cycle 5% max, limited by junction temperature TJ(MAX)=125° C.

THIS PRODUCT HAS BEEN DESIGNED AND QUALIFIED FOR THE CONSUMER MARKET. APPLICATIONS OR USES AS CRITICAL COMPONENTS IN LIFE SUPPORT DEVICES OR SYSTEMS ARE NOT AUTHORIZED. AOS DOES NOT ASSUME ANY LIABILITY ARISING OUT OF SUCH APPLICATIONS OR USES OF ITS PRODUCTS. AOS RESERVES THE RIGHT TO IMPROVE PRODUCT DESIGN, FUNCTIONS AND RELIABILITY WITHOUT NOTICE.

TYPICAL ELECTRICAL AND THERMAL CHARACTERISTICS

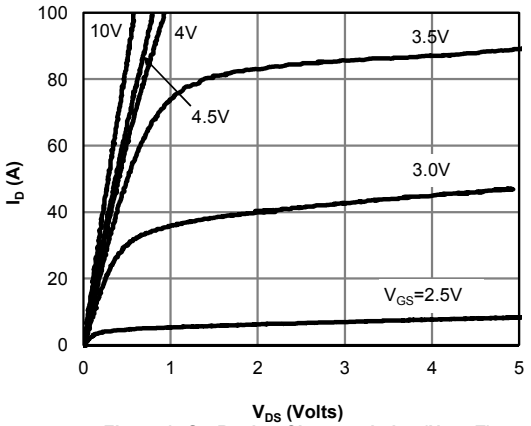

Figure 1: On-Region Characteristics (Note E)

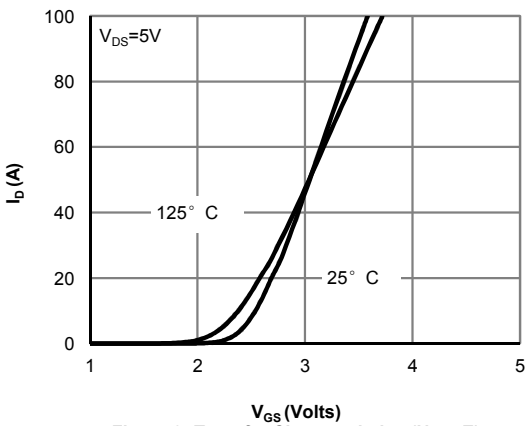

Figure 2: Transfer Characteristics (Note E)

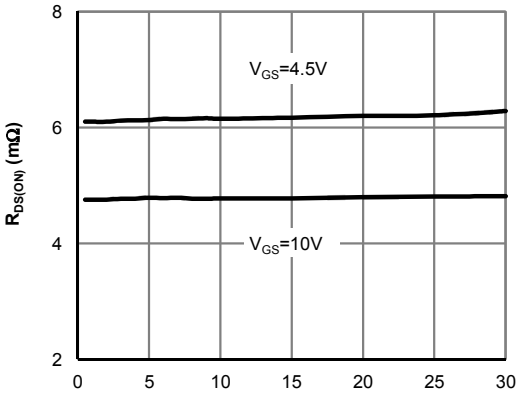

Figure 3: On-Resistance vs. Drain Current and Gate Voltage (Note E)

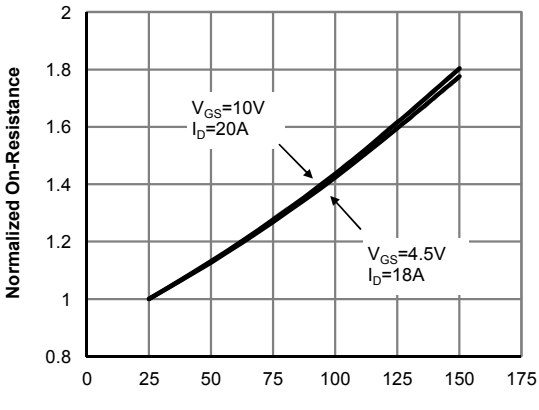

Figure 4: On-Resistance vs. Junction Temperature (Note E)

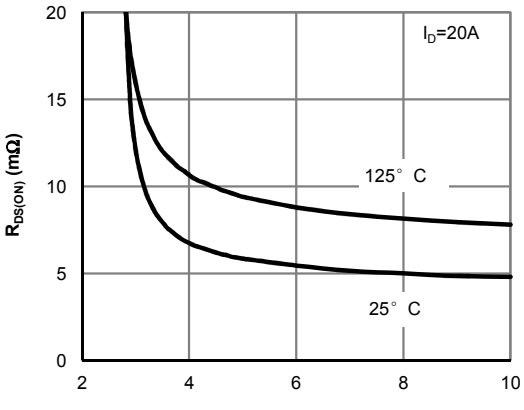

Figure 5: On-Resistance vs. Gate-Source Voltage (Note E)

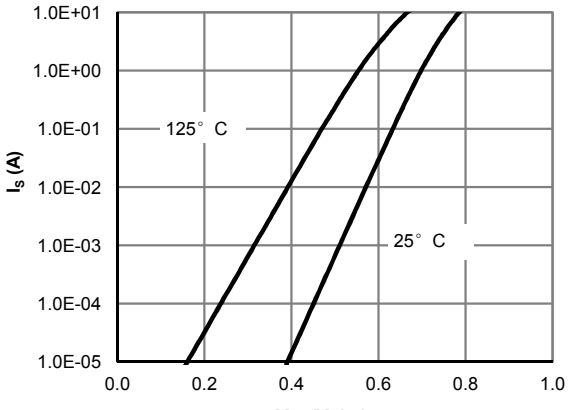

Figure 6: Body-Diode Characteristics (Note E)

TYPICAL ELECTRICAL AND THERMAL CHARACTERISTICS

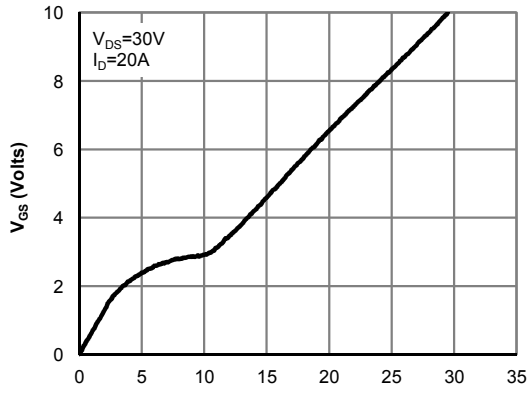

Figure 7: Gate-Charge Characteristics

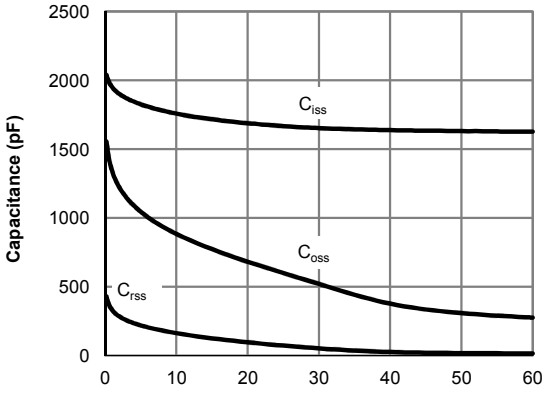

Figure 8: Capacitance Characteristics

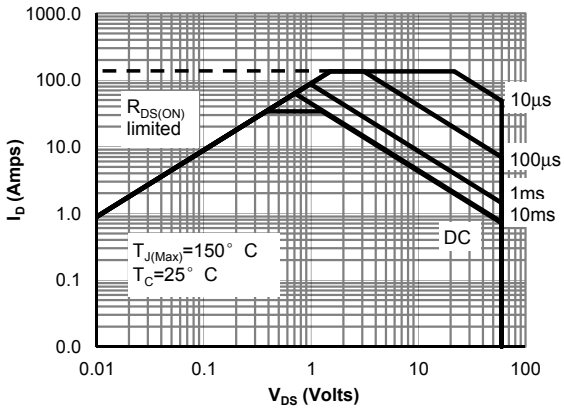

V_{GS}> or equal to 4.5V

Figure 9: Maximum Forward Biased Safe Operating Area (Note F)

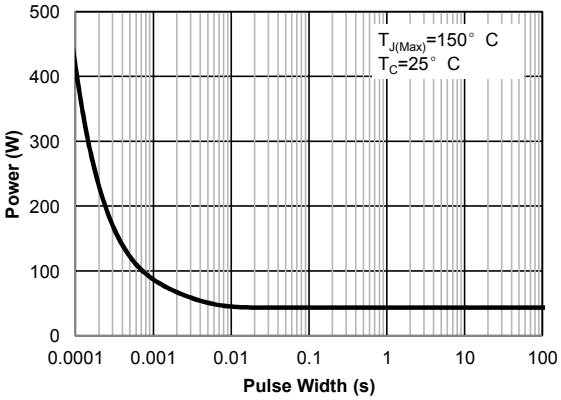

Figure 10: Single Pulse Power Rating Junction-to-Case (Note F)

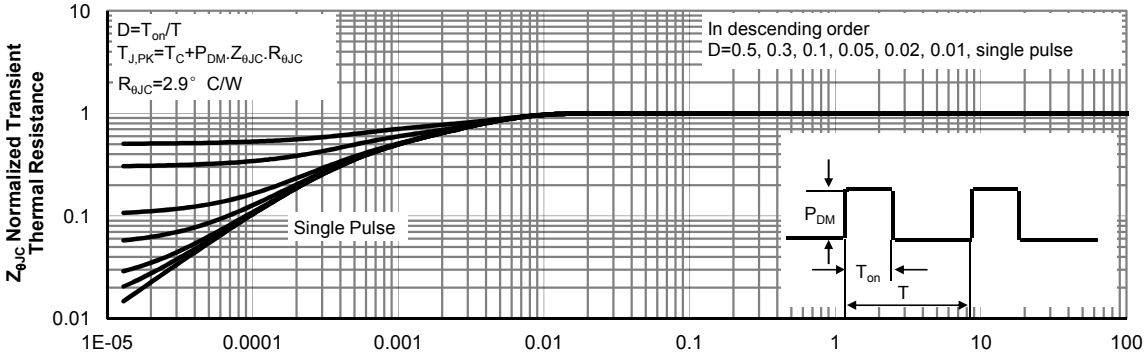

Figure 11: Normalized Maximum Transient Thermal Impedance (Note F)

TYPICAL ELECTRICAL AND THERMAL CHARACTERISTICS

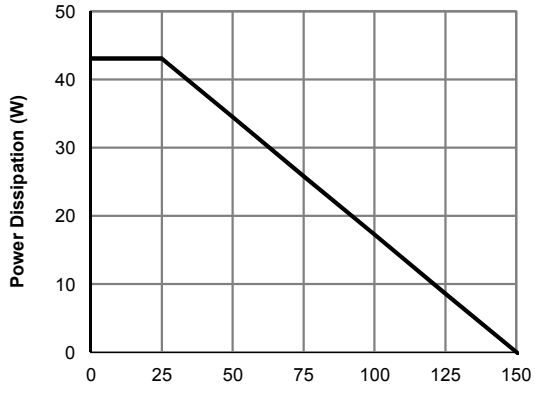

Figure 12: Power De-rating (Note F)

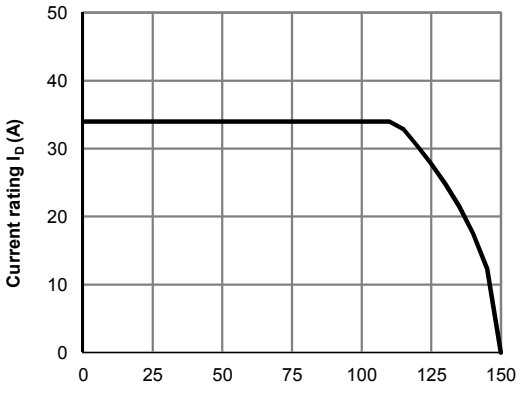

Figure 13: Current De-rating (Note F)

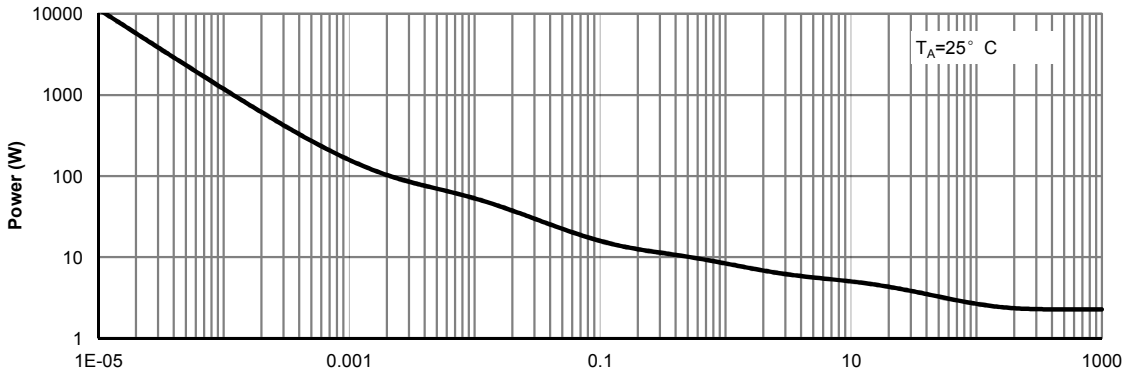

Figure 14: Single Pulse Power Rating Junction-to-Ambient (Note H)

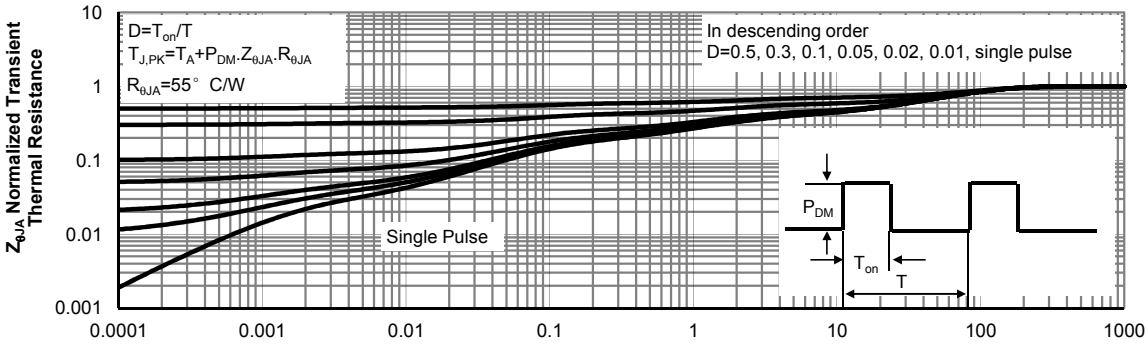

Figure 15: Normalized Maximum Transient Thermal Impedance (Note H)

Figure A: Gate Charge Test Circuit & Waveforms

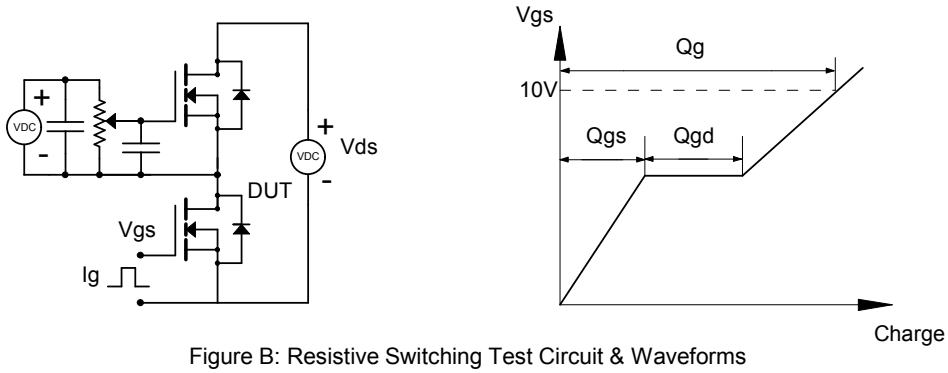

Figure B: Resistive Switching Test Circuit & Waveforms

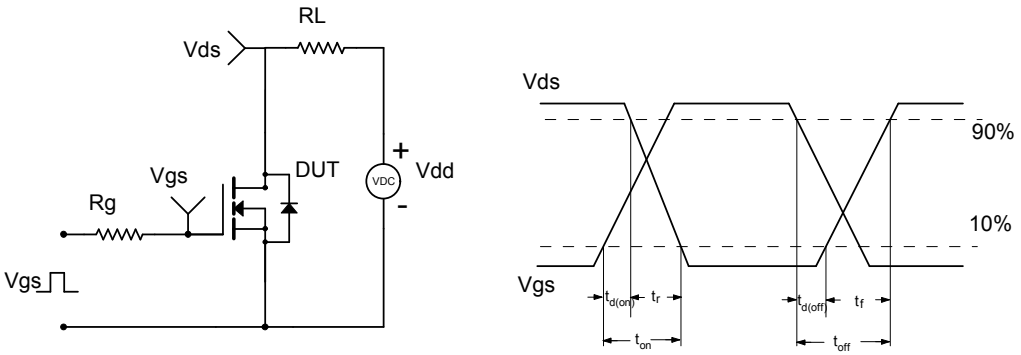

Figure C: Unclamped Inductive Switching (UIS) Test Circuit & Waveforms

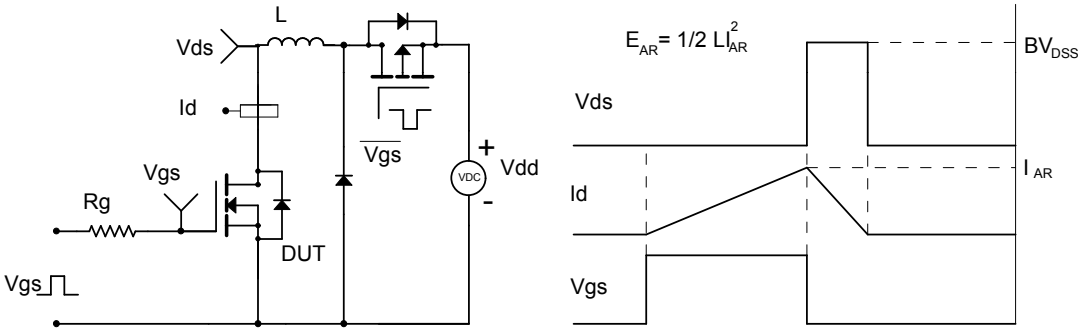

Figure D: Diode Recovery Test Circuit & Waveforms

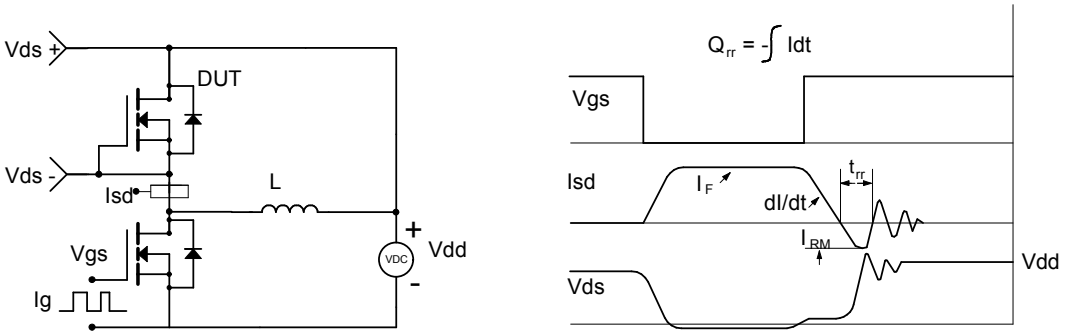

ENTEGRECİ

Bu belge www.entegreci.com üzerinden sunulmaktadır.

Elektronik komponent tedarikinde Entegreci

Entegreci, Eskişehir merkezli, Türkiye geneline satış yapan bir elektronik komponent mağazasıdır. Entegreler (IC), mikrodenetleyiciler, transistörler, diyotlar, pasif elemanlar, konnektörler, modüller ve geliştirme kartları tek adetten seri üretim adetlerine kadar satılır. Ürün sayfalarında güncel stok durumunu, fiyatı ve datasheet bağlantısını bulabilirsiniz.

Parça koduyla arama

Üretici parça numarasını yazın; stok ve fiyatı hemen görün.

www.entegreci.com

Ürün kategorileri

Entegreden kapasitöre tüm elektronik komponent kategorileri.

Kategorilere göz atın

Üreticiler

Aradığınız üreticinin ürünlerini tek sayfada inceleyin.

Üreticileri görün

Toplu alım ve teklif

Listede olmayan ya da yüksek adetli parçalar için teklif isteyin.

Teklif isteyin

www.entegreci.com | **destek@entegreci.com** | **0850 305 90 34**

Entegreci is an online electronic components store based in Türkiye. Search by manufacturer part number to see stock, prices and datasheets for integrated circuits, microcontrollers, transistors, passive components and connectors, or request a quote for parts that are not listed.

Bu sayfa Entegreci tarafından eklenmiştir. Belgenin önceki sayfaları asıl yayıncısına aittir ve içeriği değiştirilmemiştir; en güncel sürüm için belgenin yayıncısına başvurun.