ALPHA & OMEGA SEMICONDUCTOR

AOD4132

30v N-Channel MOSFET

General Description

The AOD4132 uses advanced trench technology to provide excellent $R_{DS(ON)}$, low gate charge and low gate resistance. This device is ideally suited for use as a low side switch in CPU core power conversion.

-RoHS Compliant
-Halogen Free*

Features

V_{DS} (V) = 30V
I_D = 85A (V_{GS} = 10V)
$R_{DS(ON)}$ < 4mΩ (V_{GS} = 10V)
$R_{DS(ON)}$ < 6mΩ (V_{GS} = 4.5V)

100% UIS Tested
100% Rg Tested

Green Product RoHS Compliant

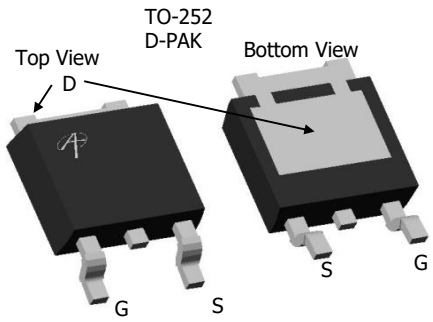

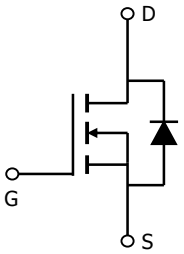

Absolute Maximum Ratings T_A=25°C unless otherwise noted

Parameter		Symbol	Maximum	Units
Drain-Source Voltage		V_{DS}	30	V
Gate-Source Voltage		V_{GS}	±20	V
Continuous Drain Current [B,G]	T_C=25°C [G]	I_D	85	A
	T_C=100°C [B]		63	
Pulsed Drain Current		I_{DM}	200	
Avalanche Current [C]		I_{AR}	30	A
Repetitive avalanche energy L=0.1mH [C]		E_{AR}	112	mJ
Power Dissipation [B]	T_C=25°C	P_D	100	W
	T_C=100°C		50	
Power Dissipation [A]	T_A=25°C	P_{DSM}	2.5	W
	T_A=70°C		1.6	
Junction and Storage Temperature Range		T_J, T_{STG}	-55 to 175	°C

Thermal Characteristics

Parameter		Symbol	Typ	Max	Units
Maximum Junction-to-Ambient [A]	t ≤ 10s	$R_{\theta JA}$	14.2	20	°C/W
Maximum Junction-to-Ambient [A]	Steady-State		39	50	°C/W
Maximum Junction-to-Case [C]	Steady-State	$R_{\theta JC}$	0.8	1.5	°C/W

Electrical Characteristics (T_J=25°C unless otherwise noted)

Symbol	Parameter	Conditions	Min	Typ	Max	Units
STATIC PARAMETERS						
BV_{DSS}	Drain-Source Breakdown Voltage	I_D=250µA, V_{GS}=0V	30			V
I_{DSS}	Zero Gate Voltage Drain Current	V_{DS}=24V, V_{GS}=0V			1	µA
		T_J=55°C			5	
I_{GSS}	Gate-Body leakage current	V_{DS}=0V, V_{GS}= ±20V			100	nA
$V_{GS(th)}$	Gate Threshold Voltage	V_{DS}=V_{GS} I_D=250µA	1	1.8	3	V
$I_{D(ON)}$	On state drain current	V_{GS}=10V, V_{DS}=5V	85			A
$R_{DS(ON)}$	Static Drain-Source On-Resistance	V_{GS}=10V, I_D=20A		2.8	4	mΩ
		T_J=125°C		4.4	5.5	
		V_{GS}=4.5V, I_D=20A		4.4	6	mΩ
g_{FS}	Forward Transconductance	V_{DS}=5V, I_D=20A		106		S
V_{SD}	Diode Forward Voltage	I_S=1A,V_{GS}=0V		0.72	1	V
I_S	Maximum Body-Diode Continuous Current				85	A
DYNAMIC PARAMETERS						
C_{iss}	Input Capacitance	V_{GS}=0V, V_{DS}=15V, f=1MHz		3700	4400	pF
C_{oss}	Output Capacitance			700		pF
C_{rss}	Reverse Transfer Capacitance			390		pF
R_g	Gate resistance	V_{GS}=0V, V_{DS}=0V, f=1MHz		0.54	0.7	Ω
SWITCHING PARAMETERS						
Q_g(10V)	Total Gate Charge	V_{GS}=4.5V, V_{DS}=15V, I_D=20A		63	76	nC
Q_g(4.5V)	Total Gate Charge			33	40	nC
Q_{gs}	Gate Source Charge			8.6		nC
Q_{gd}	Gate Drain Charge			17.6		nC
$t_{D(on)}$	Turn-On DelayTime	V_{GS}=10V, V_{DS}=15V, R_L=0.75Ω, R_{GEN}=3Ω		12		ns
t_r	Turn-On Rise Time			15.5		ns
$t_{D(off)}$	Turn-Off DelayTime			40		ns
t_f	Turn-Off Fall Time			14		ns
t_{rr}	Body Diode Reverse Recovery Time	I_F=20A, dI/dt=100A/µs		34	41	ns
Q_{rr}	Body Diode Reverse Recovery Charge	I_F=20A, dI/dt=100A/µs		30		nC

A: The value of $R_{\theta JA}$ is measured with the device mounted on 1in^2 FR-4 board with 2oz. Copper, in a still air environment with T_A=25° C. The Power dissipation P_{DSM} is based on steady-state $R_{\theta JA}$ and the maximum allowed junction temperature of 150° C. The value in any given application depends on the user's specific board design, and the maximum temperature fo 175° C may be used if the PCB or heatsink allows it.
B. The power dissipation P_D is based on $T_{J(MAX)}$=175° C, using junction-to-case thermal resistance, and is more useful in setting the upper dissipation limit for cases where additional heatsinking is used. It is used to determine the current rating, when this rating falls below the package limit.
C: Repetitive rating, pulse width limited by junction temperature $T_{J(MAX)}$=175° C.
D. The $R_{\theta JA}$ is the sum of the thermal impedence from junction to case $R_{\theta JC}$ and case to ambient.
E. The static characteristics in Figures 1 to 6 are obtained using <300 µs pulses, duty cycle 0.5% max.
F. These tests are performed with the device mounted on 1 in^2 FR-4 board with 2oz. Copper, in a still air environment with T_A=25° C. The SOA curve provides a single pulse rating.
G. The maximum current rating is limited by the package current capability.
*This device is guaranteed green after data code 8X11 (Sep 1ST 2008).

APPLICATIONS OR USES AS CRITICAL COMPONENTS IN LIFE SUPPORT DEVICES OR SYSTEMS ARE NOT AUTHORIZED. AOS DOES NOT ASSUME ANY LIABILITY ARISING OUT OF SUCH APPLICATIONS OR USES OF ITS PRODUCTS. AOS RESERVES THE RIGHT TO MAKE CHANGES TO PRODUCT SPECIFICATIONS WITHOUT NOTICE. IT IS THE RESPONSIBILITY OF THE CUSTOMER TO EVALUATE SUITABILITY OF THE PRODUCT FOR THEIR INTENDED APPLICATION. CUSTOMER SHALL COMPLY WITH APPLICABLE LEGAL REQUIREMENTS, INCLUDING ALL APPLICABLE EXPORT CONTROL RULES, REGULATIONS AND LIMITATIONS.

AOS' products are provided subject to AOS' terms and conditions of sale which are set forth at:
http://www.aosmd.com/terms_and_conditions_of_sale

TYPICAL ELECTRICAL AND THERMAL CHARACTERISTICS

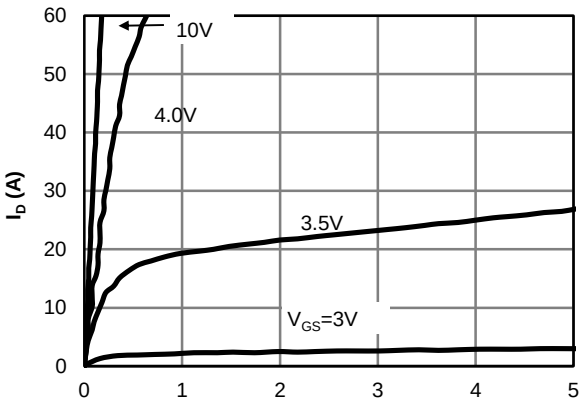

Fig 1: On-Region Characteristics

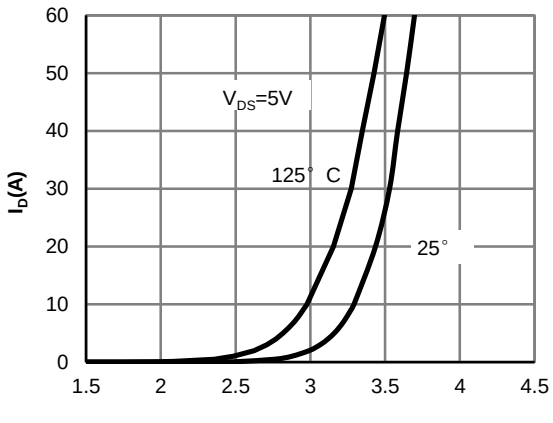

Figure 2: Transfer Characteristics

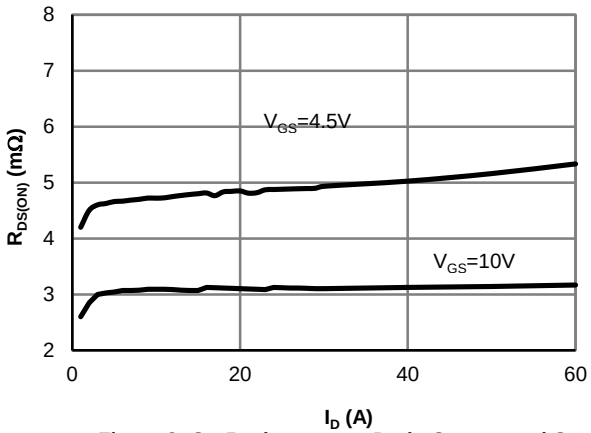

Figure 3: On-Resistance vs. Drain Current and Gate Voltage

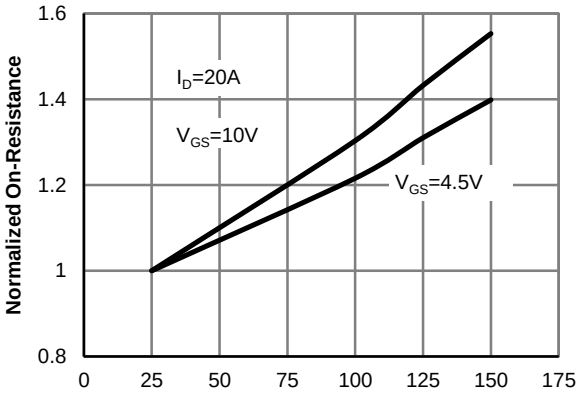

Figure 4: On-Resistance vs. Junction Temperature

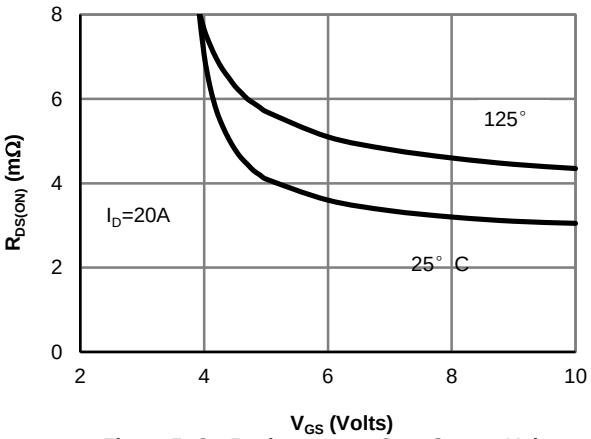

Figure 5: On-Resistance vs. Gate-Source Voltage

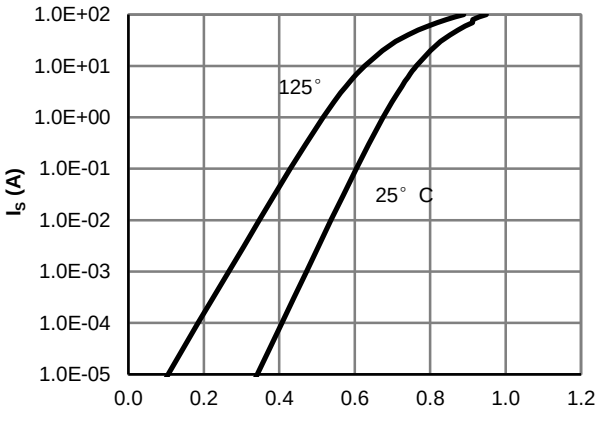

Figure 6: Body-Diode Characteristics

TYPICAL ELECTRICAL AND THERMAL CHARACTERISTICS

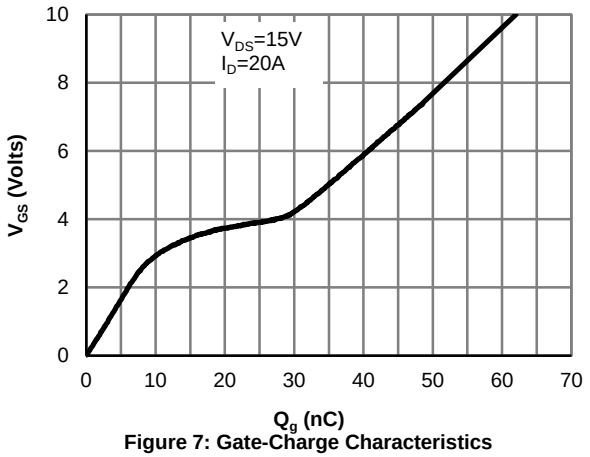

Figure 7: Gate-Charge Characteristics

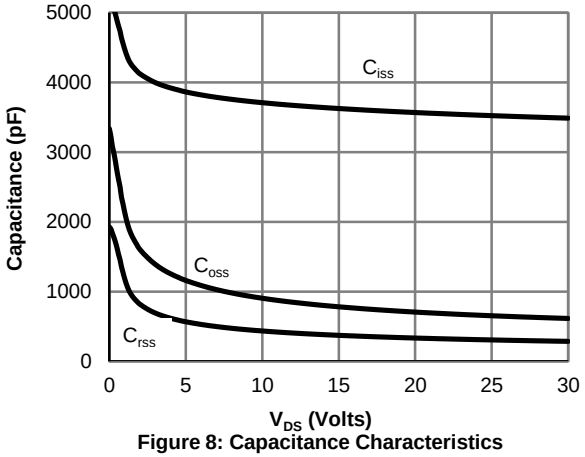

Figure 8: Capacitance Characteristics

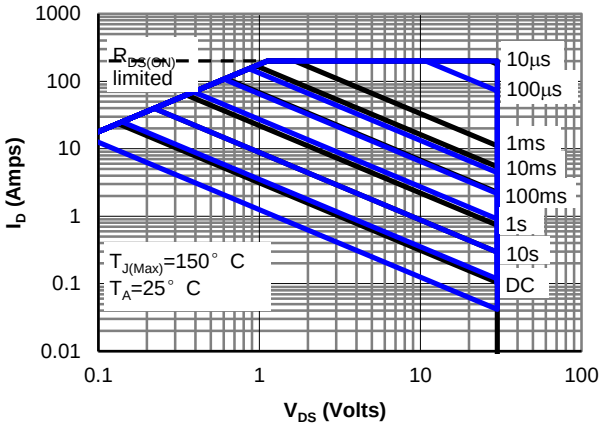

Figure 9: Maximum Forward Biased Safe Operating Area (Note F)

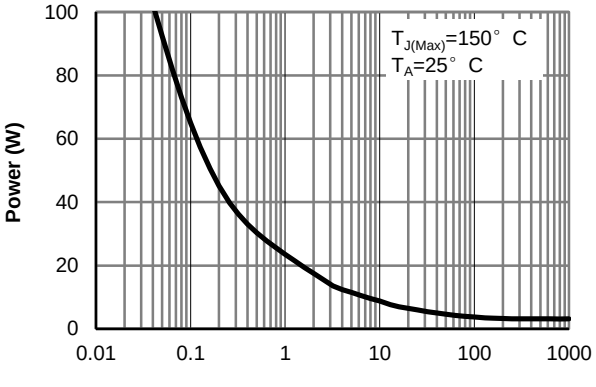

Figure 10: Single Pulse Power Rating Junction-to-Ambient (Note F)

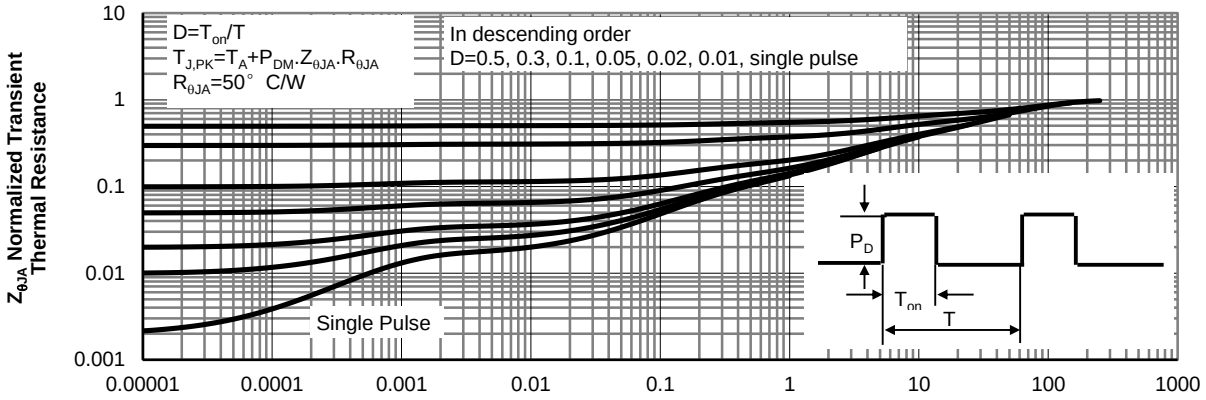

Figure 11: Normalized Maximum Transient Thermal Impedance (Note F)

TYPICAL ELECTRICAL AND THERMAL CHARACTERISTICS

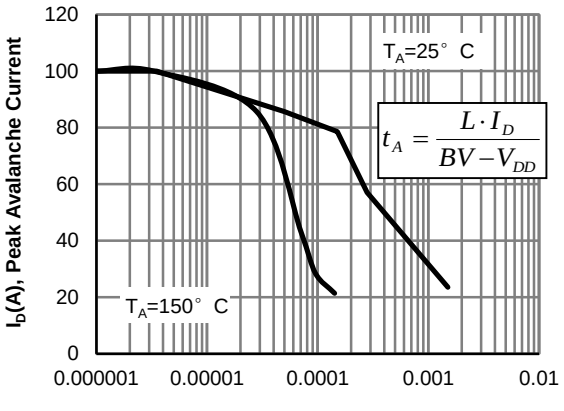

Figure 12: Single Pulse Avalanche capability

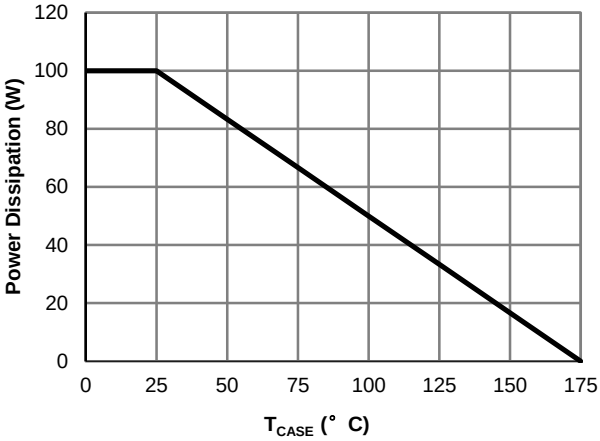

Figure 13: Power De-rating (Note B)

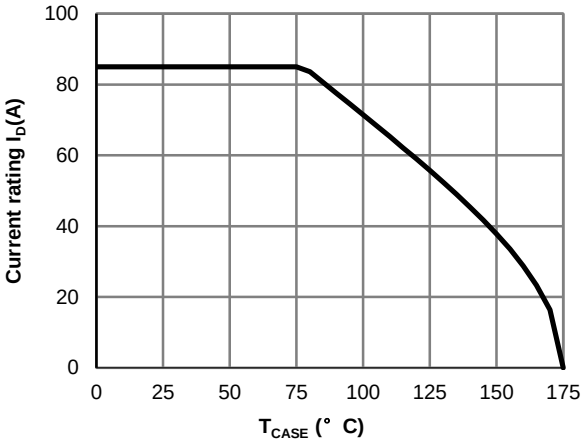

Figure 14: Current De-rating (Note B)

Gate Charge Test Circuit & Waveform

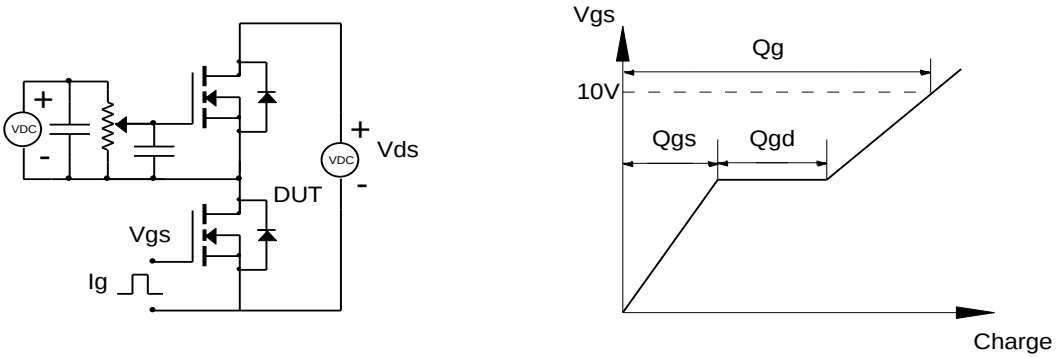

Resistive Switching Test Circuit & Waveforms

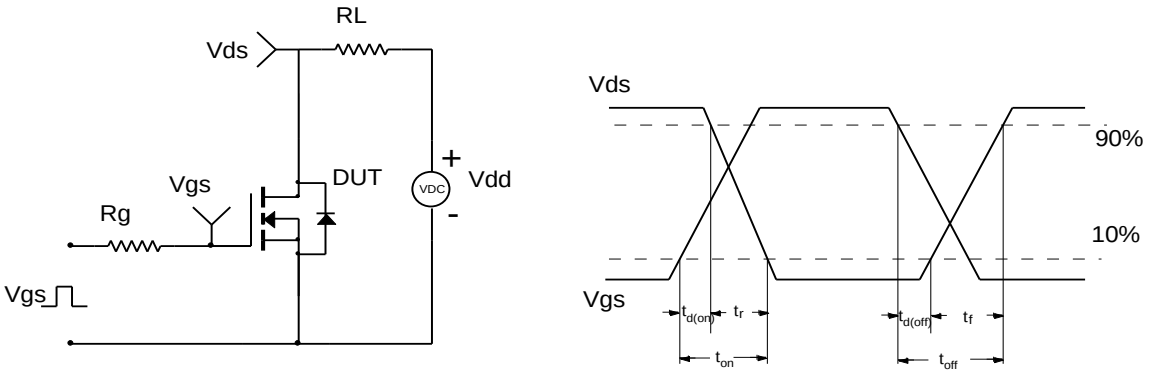

Unclamped Inductive Switching (UIS) Test Circuit & Waveforms

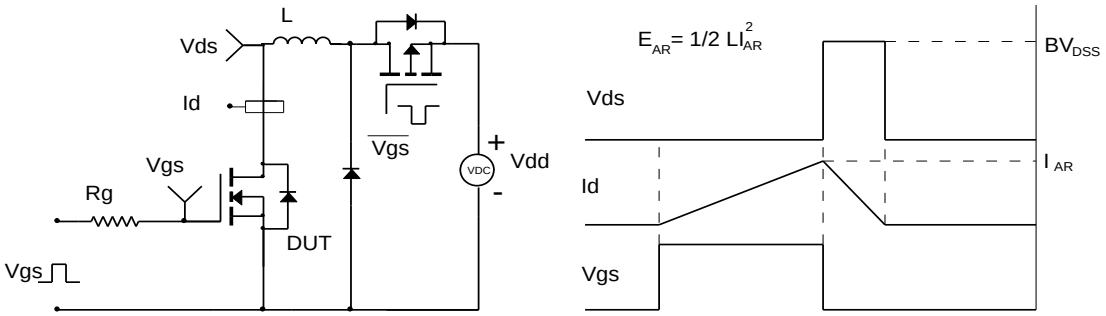

Diode Recovery Test Circuit & Waveforms

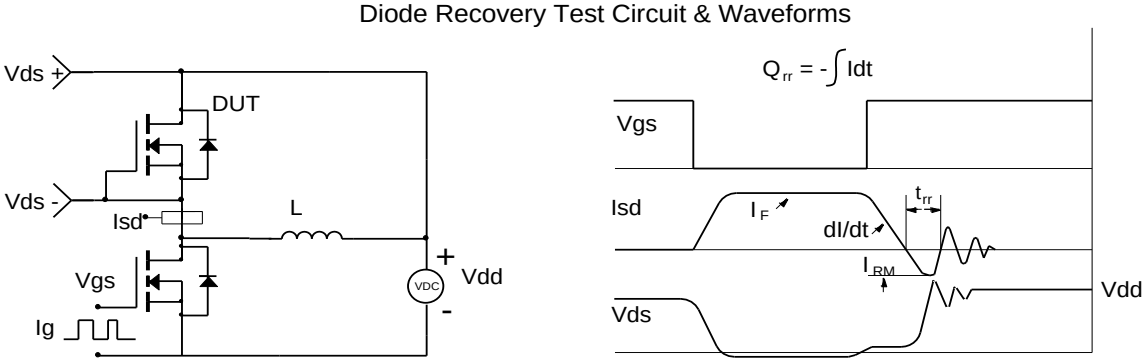

ENTEGRECİ

Bu belge www.entegreci.com üzerinden sunulmaktadır.

Elektronik komponent tedarikinde Entegreci

Entegreci, Eskişehir merkezli, Türkiye geneline satış yapan bir elektronik komponent mağazasıdır. Entegreler (IC), mikrodenetleyiciler, transistörler, diyotlar, pasif elemanlar, konnektörler, modüller ve geliştirme kartları tek adetten seri üretim adetlerine kadar satılır. Ürün sayfalarında güncel stok durumunu, fiyatı ve datasheet bağlantısını bulabilirsiniz.

Parça koduyla arama

Üretici parça numarasını yazın; stok ve fiyatı hemen görün.

www.entegreci.com

Ürün kategorileri

Entegreden kapasitöre tüm elektronik komponent kategorileri.

Kategorilere göz atın

Üreticiler

Aradığınız üreticinin ürünlerini tek sayfada inceleyin.

Üreticileri görün

Toplu alım ve teklif

Listede olmayan ya da yüksek adetli parçalar için teklif isteyin.

Teklif isteyin

www.entegreci.com | **destek@entegreci.com** | **0850 305 90 34**

Entegreci is an online electronic components store based in Türkiye. Search by manufacturer part number to see stock, prices and datasheets for integrated circuits, microcontrollers, transistors, passive components and connectors, or request a quote for parts that are not listed.

Bu sayfa Entegreci tarafından eklenmiştir. Belgenin önceki sayfaları asıl yayıncısına aittir ve içeriği değiştirilmemiştir; en güncel sürüm için belgenin yayıncısına başvurun.