ALPHA & OMEGA SEMICONDUCTOR

AO4411

30V P-Channel MOSFET

General Description

The AO4411 uses advanced trench technology to provide excellent $R_{DS(ON)}$, and ultra-low low gate charge. This device is suitable for use as a load switch or in PWM applications.

Product Summary

V_{DS}	-30V
I_D (at V_{GS}=-10V)	-8A
$R_{DS(ON)}$ (at V_{GS}=-10V)	< 32mΩ
$R_{DS(ON)}$ (at V_{GS} = -4.5V)	< 55mΩ

100% UIS Tested
100% R_g Tested

Green Product

SOIC-8

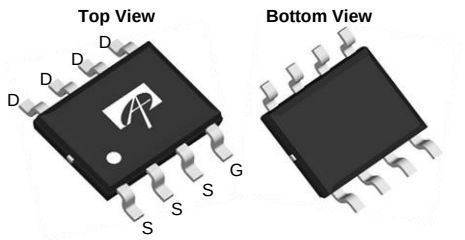

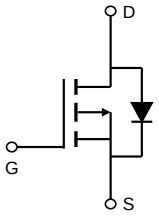

Absolute Maximum Ratings T_A=25°C unless otherwise noted

Parameter		Symbol	Maximum	Units
Drain-Source Voltage		V_{DS}	-30	V
Gate-Source Voltage		V_{GS}	±20	V
Continuous Drain Current	T_A=25°C	I_D	-8	A
	T_A=70°C		-6.6	
Pulsed Drain Current [C]		I_{DM}	-40	
Avalanche Current [C]		I_{AS}, I_{AR}	23	A
Avalanche energy L=0.1mH [C]		E_{AS}, E_{AR}	26	mJ
Power Dissipation [B]	T_A=25°C	P_D	3.1	W
	T_A=70°C		2	
Junction and Storage Temperature Range		T_J, T_{STG}	-55 to 150	°C

Thermal Characteristics

Parameter		Symbol	Typ	Max	Units
Maximum Junction-to-Ambient [A]	t ≤ 10s	$R_{\theta JA}$	31	40	°C/W
Maximum Junction-to-Ambient [A D]	Steady-State		59	75	°C/W
Maximum Junction-to-Lead	Steady-State	$R_{\theta JL}$	16	24	°C/W

Electrical Characteristics (T_J=25°C unless otherwise noted)

Symbol	Parameter	Conditions	Min	Typ	Max	Units
STATIC PARAMETERS						
BV_{DSS}	Drain-Source Breakdown Voltage	I_D=-250µA, V_{GS}=0V	-30			V
I_{DSS}	Zero Gate Voltage Drain Current	V_{DS}=-30V, V_{GS}=0V			-1	µA
		T_J=55°C			-5	
I_{GSS}	Gate-Body leakage current	V_{DS}=0V, V_{GS}= ±20V			±100	nA
$V_{GS(th)}$	Gate Threshold Voltage	V_{DS}=V_{GS} I_D=-250µA	-1.3	-1.85	-2.4	V
$I_{D(ON)}$	On state drain current	V_{GS}=-10V, V_{DS}=-5V	-40			A
$R_{DS(ON)}$	Static Drain-Source On-Resistance	V_{GS}=-10V, I_D=-8A		21	32	mΩ
		T_J=125°C		31.5	38	
		V_{GS}=-4.5V, I_D=-5A		33	55	mΩ
g_{FS}	Forward Transconductance	V_{DS}=-5V, I_D=-8A		19		S
V_{SD}	Diode Forward Voltage	I_S=-1A,V_{GS}=0V		-0.8	-1	V
I_S	Maximum Body-Diode Continuous Current				-3.5	A
DYNAMIC PARAMETERS						
C_{iss}	Input Capacitance	V_{GS}=0V, V_{DS}=-15V, f=1MHz		760		pF
C_{oss}	Output Capacitance			140		pF
C_{rss}	Reverse Transfer Capacitance			95		pF
R_g	Gate resistance	V_{GS}=0V, V_{DS}=0V, f=1MHz	1.5	3.2	5	Ω
SWITCHING PARAMETERS						
Q_g(10V)	Total Gate Charge	V_{GS}=-10V, V_{DS}=-15V, I_D=-8A		13.6	16	nC
Q_g(4.5V)	Total Gate Charge			6.7	8	nC
Q_{gs}	Gate Source Charge			2.5		nC
Q_{gd}	Gate Drain Charge			3.2		nC
$t_{D(on)}$	Turn-On DelayTime	V_{GS}=-10V, V_{DS}=-15V, R_L=1.8Ω, R_{GEN}=3Ω		8		ns
t_r	Turn-On Rise Time			6		ns
$t_{D(off)}$	Turn-Off DelayTime			17		ns
t_f	Turn-Off Fall Time			5		ns
t_{rr}	Body Diode Reverse Recovery Time	I_F=-8A, dI/dt=100A/µs		15		ns
Q_{rr}	Body Diode Reverse Recovery Charge	I_F=-8A, dI/dt=100A/µs		9.7		nC

A. The value of $R_{\theta JA}$ is measured with the device mounted on 1in² FR-4 board with 2oz. Copper, in a still air environment with T_A =25° C. The value in any given application depends on the user's specific board design.
B. The power dissipation P_D is based on $T_{J(MAX)}$=150° C, using ≤ 10s junction-to-ambient thermal resistance.
C. Repetitive rating, pulse width limited by junction temperature $T_{J(MAX)}$=150° C. Ratings are based on low frequency and duty cycles to keep initialT_J=25° C.
D. The $R_{\theta JA}$ is the sum of the thermal impedence from junction to lead $R_{\theta JL}$ and lead to ambient.
E. The static characteristics in Figures 1 to 6 are obtained using <300µs pulses, duty cycle 0.5% max.
F. These curves are based on the junction-to-ambient thermal impedence which is measured with the device mounted on 1in² FR-4 board with 2oz. Copper, assuming a maximum junction temperature of $T_{J(MAX)}$=150° C. The SOA curve provides a single pulse rating.

APPLICATIONS OR USES AS CRITICAL COMPONENTS IN LIFE SUPPORT DEVICES OR SYSTEMS ARE NOT AUTHORIZED. AOS DOES NOT ASSUME ANY LIABILITY ARISING OUT OF SUCH APPLICATIONS OR USES OF ITS PRODUCTS. AOS RESERVES THE RIGHT TO MAKE CHANGES TO PRODUCT SPECIFICATIONS WITHOUT NOTICE. IT IS THE RESPONSIBILITY OF THE CUSTOMER TO EVALUATE SUITABILITY OF THE PRODUCT FOR THEIR INTENDED APPLICATION. CUSTOMER SHALL COMPLY WITH APPLICABLE LEGAL REQUIREMENTS, INCLUDING ALL APPLICABLE EXPORT CONTROL RULES, REGULATIONS AND LIMITATIONS.

AOS' products are provided subject to AOS' terms and conditions of sale which are set forth at:
http://www.aosmd.com/terms_and_conditions_of_sale

TYPICAL ELECTRICAL AND THERMAL CHARACTERISTICS

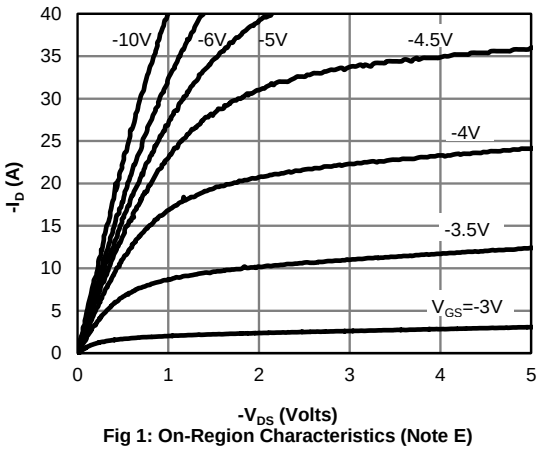

Fig 1: On-Region Characteristics (Note E)

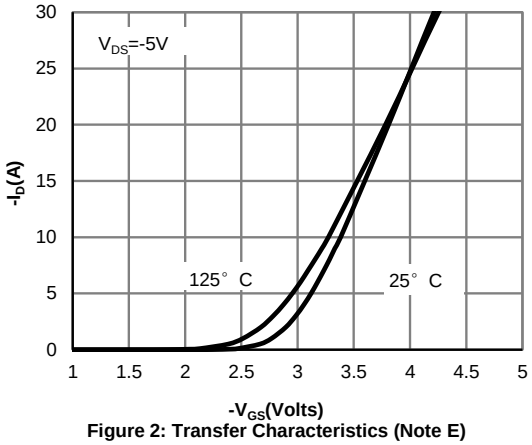

Figure 2: Transfer Characteristics (Note E)

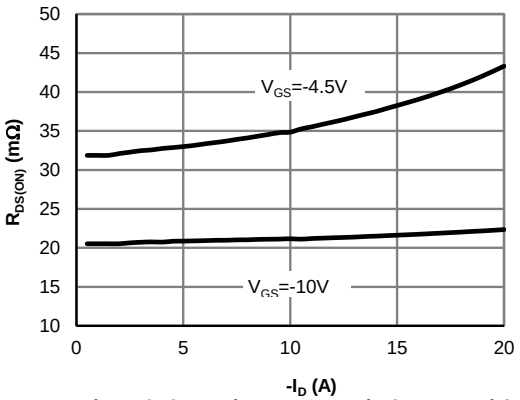

Figure 3: On-Resistance vs. Drain Current and Gate Voltage (Note E)

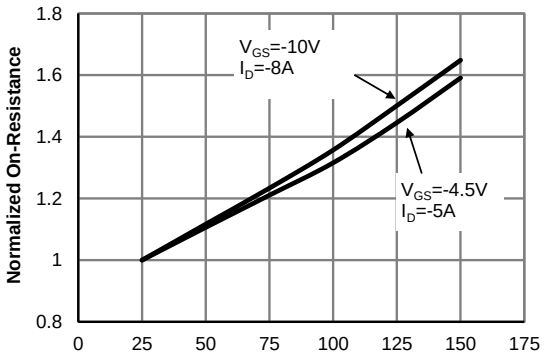

Figure 4: On-Resistance vs. Junction Temperature (Note E)

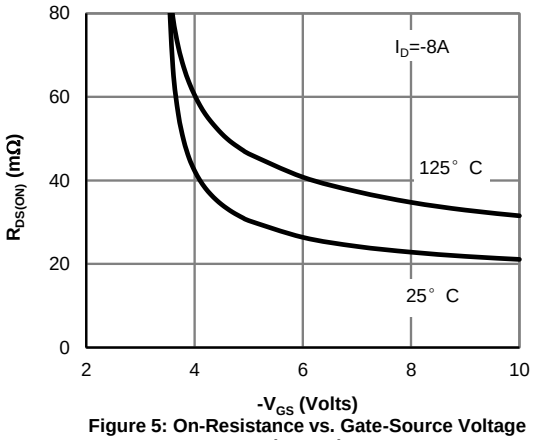

Figure 5: On-Resistance vs. Gate-Source Voltage (Note E)

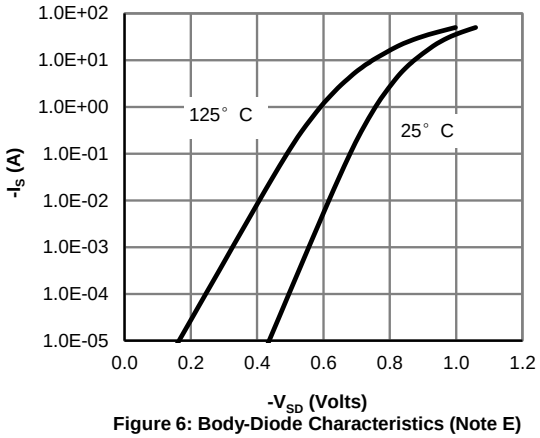

Figure 6: Body-Diode Characteristics (Note E)

TYPICAL ELECTRICAL AND THERMAL CHARACTERISTICS

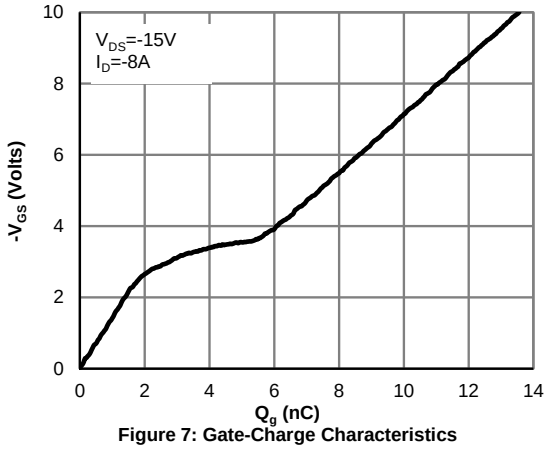

Figure 7: Gate-Charge Characteristics

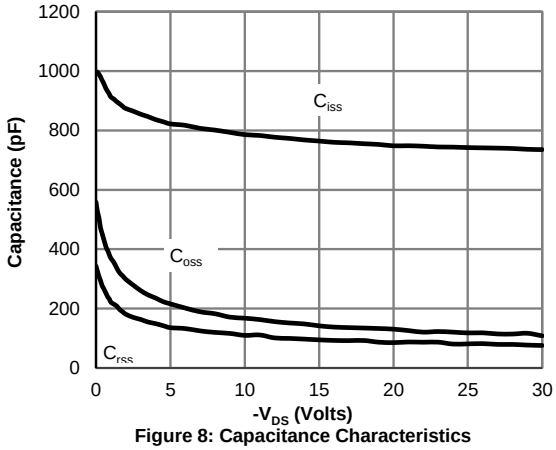

Figure 8: Capacitance Characteristics

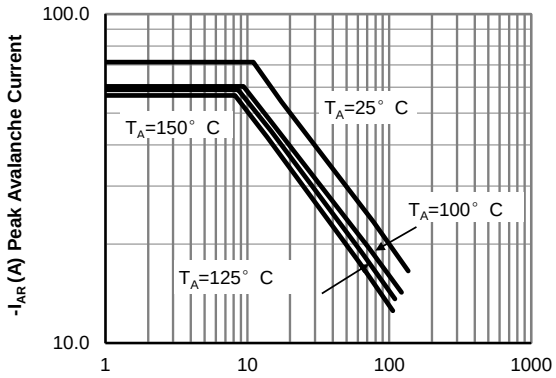

Figure 9: Single Pulse Avalanche capability (Note C)

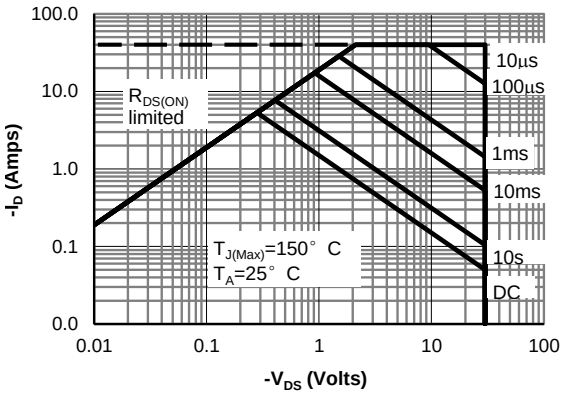

Figure 10: Maximum Forward Biased Safe Operating Area (Note F)

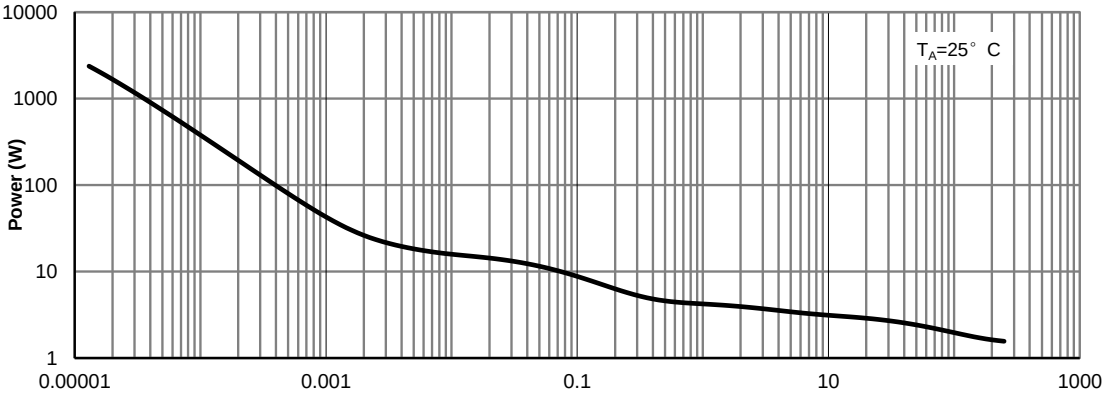

Figure 11: Single Pulse Power Rating Junction-to-Ambient (Note F)

TYPICAL ELECTRICAL AND THERMAL CHARACTERISTICS

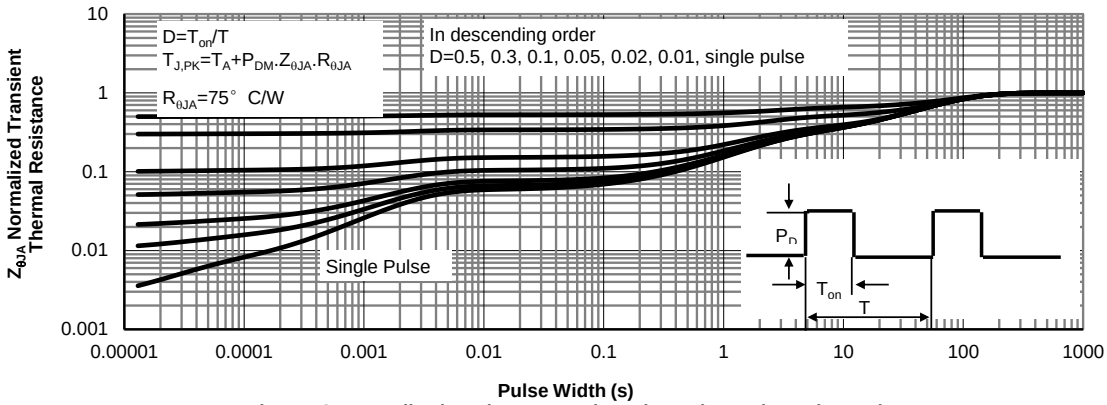

Figure 12: Normalized Maximum Transient Thermal Impedance (Note F)

Gate Charge Test Circuit & Waveform

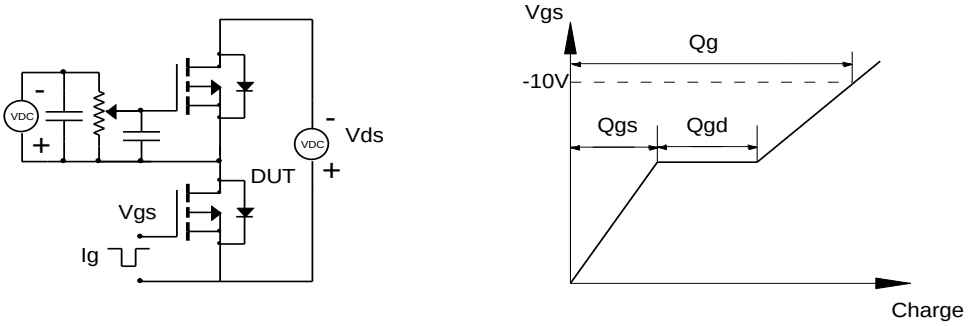

Resistive Switching Test Circuit & Waveforms

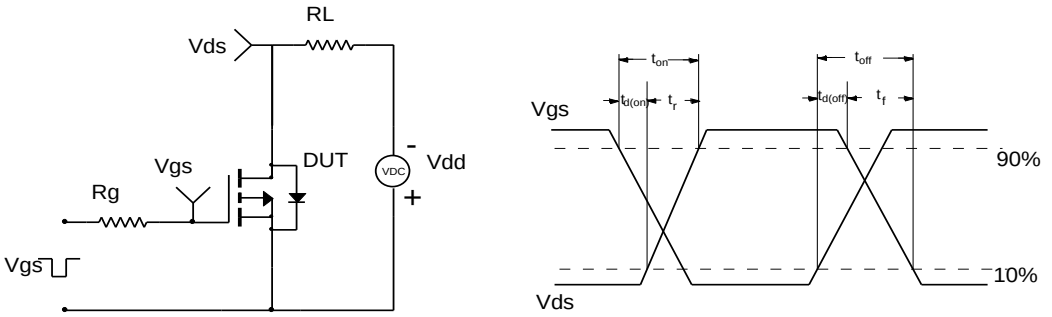

Unclamped Inductive Switching (UIS) Test Circuit & Waveforms

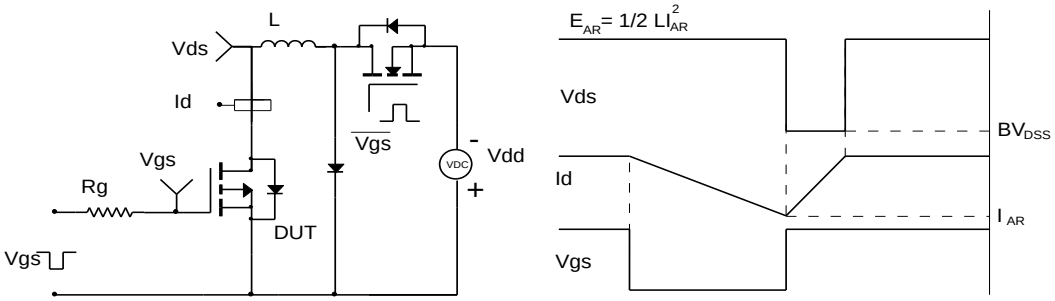

Diode Recovery Test Circuit & Waveforms

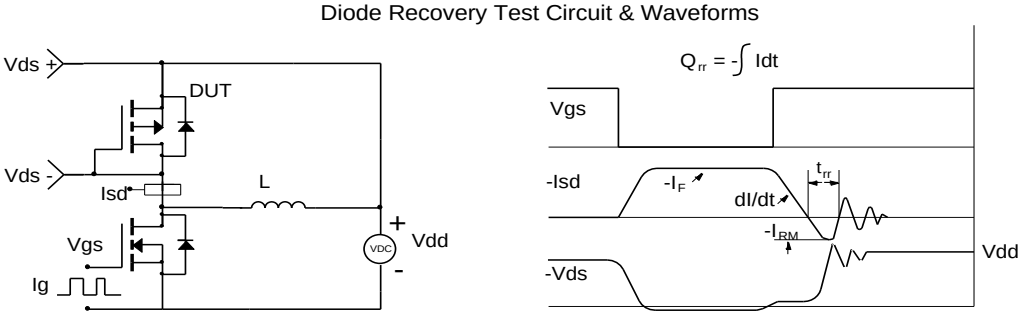

ENTEGRECİ

Bu belge www.entegreci.com üzerinden sunulmaktadır.

Elektronik komponent tedarikinde Entegreci

Entegreci, Eskişehir merkezli, Türkiye geneline satış yapan bir elektronik komponent mağazasıdır. Entegreler (IC), mikrodenetleyiciler, transistörler, diyotlar, pasif elemanlar, konnektörler, modüller ve geliştirme kartları tek adetten seri üretim adetlerine kadar satılır. Ürün sayfalarında güncel stok durumunu, fiyatı ve datasheet bağlantısını bulabilirsiniz.

Parça koduyla arama

Üretici parça numarasını yazın; stok ve fiyatı hemen görün.

www.entegreci.com

Ürün kategorileri

Entegreden kapasitöre tüm elektronik komponent kategorileri.

Kategorilere göz atın

Üreticiler

Aradığınız üreticinin ürünlerini tek sayfada inceleyin.

Üreticileri görün

Toplu alım ve teklif

Listede olmayan ya da yüksek adetli parçalar için teklif isteyin.

Teklif isteyin

www.entegreci.com | **destek@entegreci.com** | **0850 305 90 34**

Entegreci is an online electronic components store based in Türkiye. Search by manufacturer part number to see stock, prices and datasheets for integrated circuits, microcontrollers, transistors, passive components and connectors, or request a quote for parts that are not listed.

Bu sayfa Entegreci tarafından eklenmiştir. Belgenin önceki sayfaları asıl yayıncısına aittir ve içeriği değiştirilmemiştir; en güncel sürüm için belgenin yayıncısına başvurun.