NEW PRODUCT

Description

The AL5822 is a 100Hz/120Hz LED current ripple suppressor for LED lighting applications. Combined with a pre-stage APFC LED driver, the AL5822 circuitry can efficiently suppress the low frequency (100Hz/120Hz) LED current ripple from the APFC output, thus eliminate the low frequency flickering for various LED lamps.

The AL5822 adopts high efficiency driving mechanism. It can automatically adapt to different LED chains' voltage and current, to eliminate the LED current ripple, meanwhile minimize the power consumption on the Power MOSFET.

The AL5822 has built-in protections, such as Over-Temperature-Protection (OTP), Over-Current-Protection (OCP) and LED Short-Circuit Protection (SCP).

The AL5822 is available in the SOT26 package.

Pin Assignments

Top View

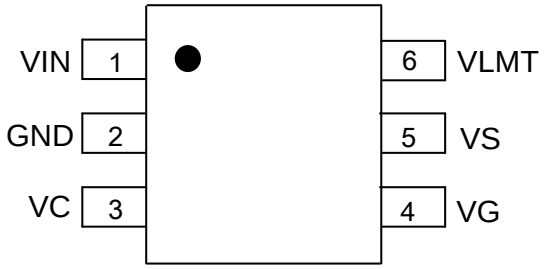

SOT26

Features

- High Efficiency
- Support Various Kinds of APFC Pre-Stage Circuit
- Simplified External Bill of Materials (BOM)
- No Need for Magnetic Components
- Wide Output Voltage and Current Range
- Tuneable LED Current Ripple Ratio
- Flickering Free
- Built-In LED Short-Circuit Protection (SCP)
- Built-In Over-Current Protection (OCP)
- Built-In Over-Temperature Protection (OTP)
- SOT26 Package
- **Totally Lead-Free & Fully RoHS Compliant (Notes 1 & 2)**
- **Halogen and Antimony Free. "Green" Device (Note 3)**

Applications

- General LED Lamps
- LED Power Modules

Notes:
1. No purposely added lead. Fully EU Directive 2002/95/EC (RoHS), 2011/65/EU (RoHS 2) & 2015/863/EU (RoHS 3) compliant.
2. See https://www.diodes.com/quality/lead-free/ for more information about Diodes Incorporated's definitions of Halogen- and Antimony-free, "Green" and Lead-free.
3. Halogen- and Antimony-free "Green" products are defined as those which contain <900ppm bromine, <900ppm chlorine (<1500ppm total Br + Cl) and <1000ppm antimony compounds.

Typical Applications Circuit

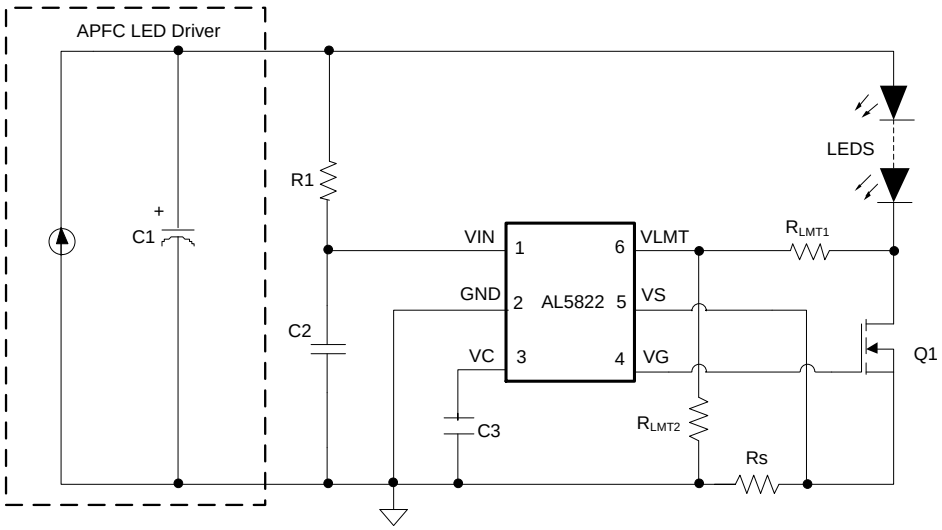

© Diodes Incorporated

NEW PRODUCT

Pin Descriptions

Pin Number	Pin Name	Function
1	VIN	Supply for the IC
2	GND	Ground
3	VC	Compensation for the Control Loop
4	VG	Gate Driver for the External MOSFET
5	VS	Current Sensing
6	VLMT	Drain Voltage Limitation for the External MOSFET

Functional Block Diagram

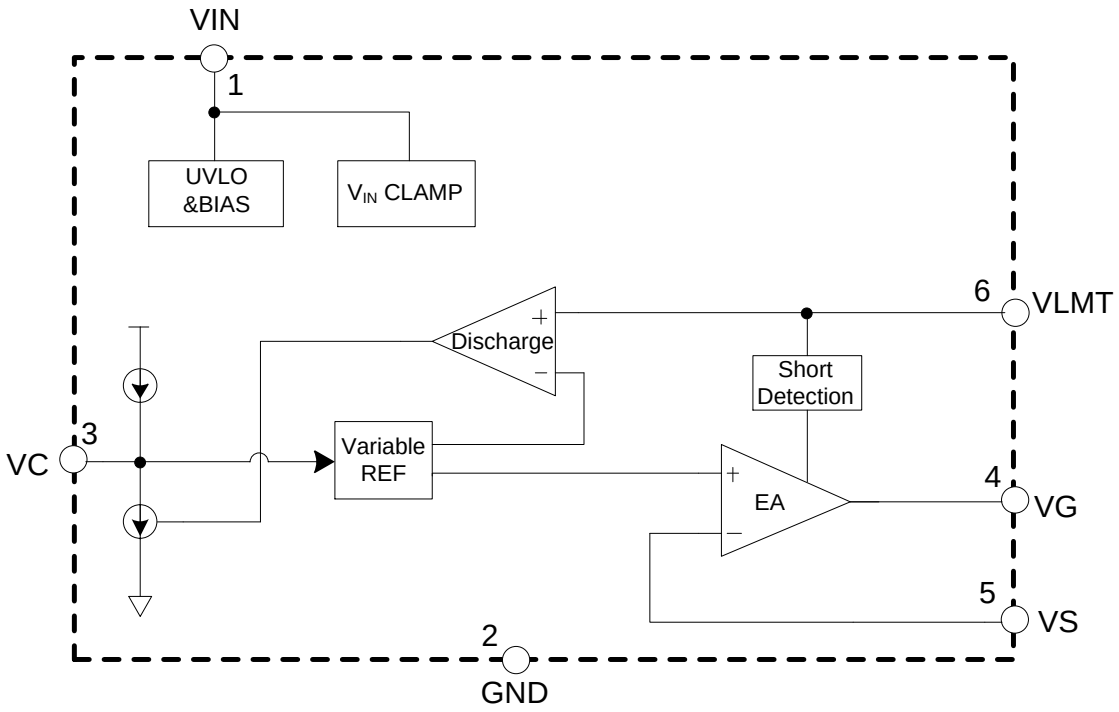

© Diodes Incorporated

NEW PRODUCT

Absolute Maximum Ratings (@T_A = +25°C, unless otherwise specified.)

Symbol	Parameters	Ratings	Unit
V_{IN}	Clamp Voltage for VIN Pin	30	V
V_S	Voltage on VS Pin	-0.3 to 6	V
V_C	Voltage on VC Pin	-0.3 to 6	V
V_{VLMT}	Voltage on VLMT Pin	-0.3 to 6	V
V_G	Voltage on VG Pin	-0.3 to 20	V
T_J	Operating Junction Temperature	-40 to +150	°C
T_{STG}	Storage Temperature	-55 to +150	°C
T_{LEAD}	Lead Temperature (Soldering, 10s)	+260	°C
P_D	Power Dissipation (T_A = +50°C) (Note 4)	0.41	W
θ_{JA}	Thermal Resistance (Junction to Ambient, no Heatsink)	240	°C/W
θ_{JC}	Thermal Resistance (Junction to Case)	60	°C/W
–	ESD (HBM)	±4,000	V
	ESD (CDM)	±1,000	V

Note: 4. Device mounted on 1''x1'' FR-4 MRP substrate PC board, 2oz cooper, with minimum recommended pad layout. No thermal via and no ground plane.

Caution: Stresses greater than the 'Absolute Maximum Ratings' specified above, may cause permanent damage to the device. These are stress ratings only; functional operation of the device at these or any other conditions exceeding those indicated in this specification is not implied. Device reliability may be affected by exposure to absolute maximum rating conditions for extended periods of time. Semiconductor devices are ESD sensitive and may be damaged by exposure to ESD events. Suitable ESD precautions should be taken when handling and transporting these devices.

Recommended Operating Conditions (@T_A = +25°C, unless otherwise specified.) (Note 5)

Symbol	Parameter	Min	Max	Unit
T_A	Operating Ambient Temperature Range	-40	+105	°C
V_{IN}	Operating V_{CC} Voltage	11	$V_{IN_CLAMP(MIN)}$	V

Note: 5. The device may operate normally at +125°C ambient temperature under the condition not triggers temperature protection.

© Diodes Incorporated

NEW PRODUCT

Electrical Characteristics (@T_A = +25°C, V_{IN} = 12V, unless otherwise specified.) (Note 6)

Symbol	Parameter	Conditions	Min	Typ	Max	Unit
UVLO						
$V_{TH(ST)}$	Startup Voltage of VIN Pin	–	–	14.5	–	V
$V_{OPR(MIN)}$	Minimal Operating Voltage	After Turn On	–	8.5	–	V
V_{IN_CLAMP}	VIN Clamp Voltage	I_{VIN}=1mA	–	27	–	V
Operation Current						
I_{ST}	V_{IN}= $V_{TH(ST)_MIN}$-0.5V	–	–	100	–	μA
$I_{IN\ (OPR)}$	VIN Operation Current	–	–	220	–	μA
VG						
V_{VG}	Maximum VG Output Voltage	–	–	8	–	V
VLMT						
V_{VLMT}	VLMT Reference Voltage	–	1.9	2	2.1	V
VD						
V_{D_SHORT}	LED Short Circuit Protection Threshold Voltage for Drain of the External MOSFET	R_{LMT1}=R_{LMT2}=100kΩ, LED String Short	–	8	–	V
Timing						
t_{SHT_DELAY}	LED Short Circuit Protection Delay	–	–	70	–	μs
t_{SHT_HOLD}	LED Short Circuit Protection Holding Time	–	–	40	–	ms
Thermal Protection						
T_{SHDN_HYS}	–	–	–	+40	–	°C
T_{SHDN}	Thermal Shutdown (LED1)	–	–	+165	–	°C

Note: 6. All voltages unless otherwise stated are measured with respect to GND pin.

© Diodes Incorporated

NEW PRODUCT

Typical Performance Characteristics

Figure 1. V_{CC} Startup Current vs. T_A

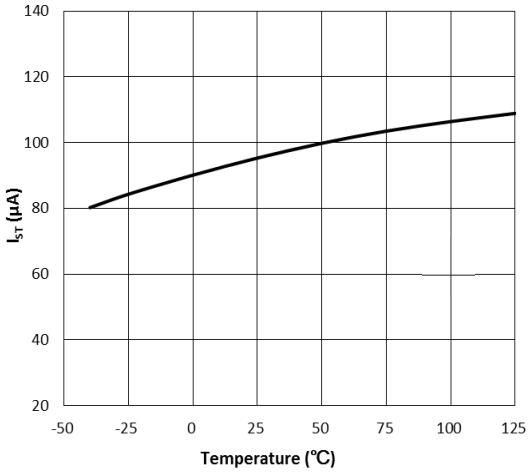

Figure 2. V_{CC} Startup Voltage vs. T_A

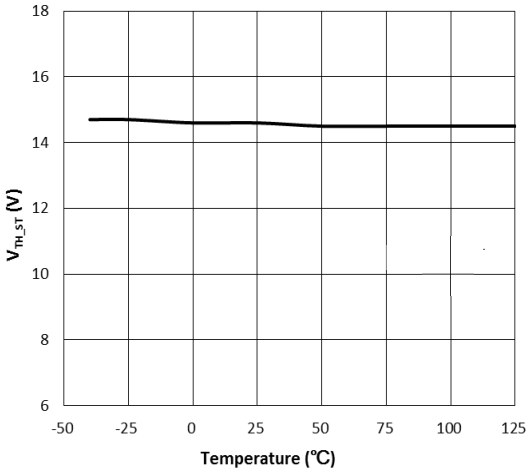

Figure 3. Operating Current vs. T_A

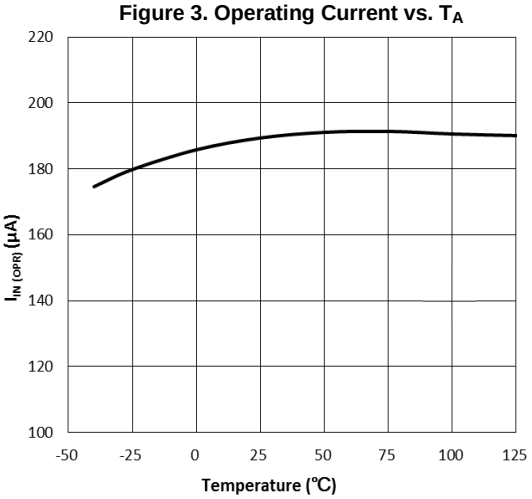

Figure 4. Maximum Gate Voltage vs. T_A

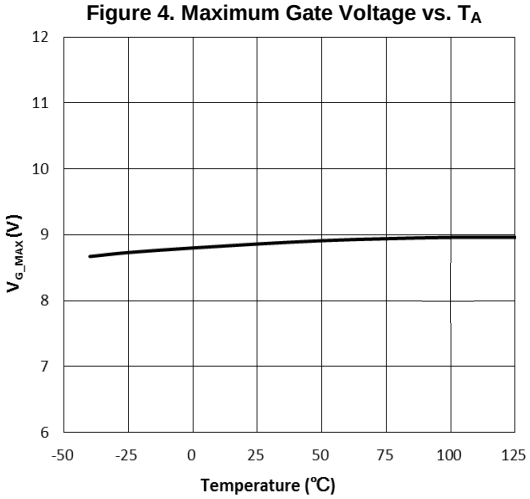

Figure 5. V_{CC} Clamp Voltage vs. T_A

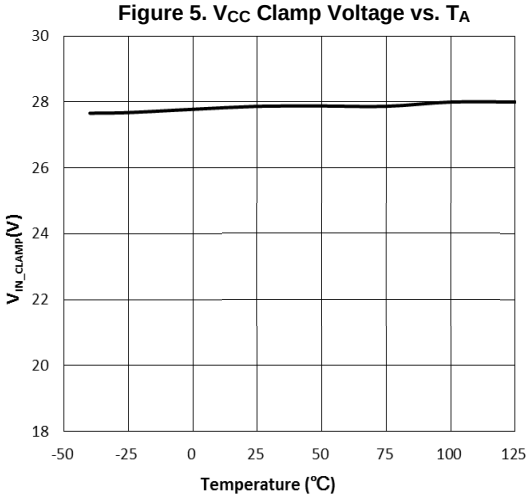

Figure 6. Minimum Operating V_{CC} vs. T_A

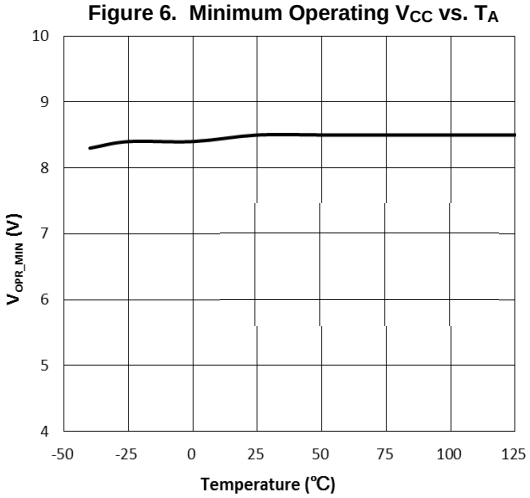

© Diodes Incorporated

NEW PRODUCT

Functional Descriptions

General

The AL5822 is a 100Hz/120Hz LED current ripple suppressor for LED lighting applications. Combined with a pre-stage APFC LED driver, the AL5822 circuitry can efficiently suppress the low frequency (100Hz/120Hz) LED current ripple from the APFC output, thus eliminate the low frequency flickering for various LED lamps.

Operation Principle

The AL5822 drives an external MOSFET, the LED ripple voltage will be applied to the MOSFET drain to source voltage, thus the LED chain's voltage will be maintain constant without the voltage ripple, in this way, the LED current ripple will be removed. AL5822 will automatically adjust the LED chain cathode voltage to minimum to improve the system efficiency.

Ripple Suppressor

The AL5822 senses the LED current through the R_S resistor, CC capacitor is a loop compensation capacitor on VC pin. The AL5822 transfers the voltage on CC capacitor to an internal reference voltage; the current control loop adjusts R_S voltage to be equal to reference voltage. The relationship between CC capacitor voltage and R_S is shown below:

$$V_{Rs} = I_{LED} * R_S = V_{VC}/10$$

In order to remove the LED ripple current, the CC capacitance should be big enough, however, too big capacitance will lead to poor system dynamic response.

Adaptive Adjustment

The AL5822 monitors the external MOSFET status to dynamically adjust the voltage on CC capacitor. When the MOSFET is working on the saturation region, the system efficiency will be low, the AL5822 detects this and charge CC capacitor, and then increase V_{VC} and I_{LED}, the gate driver voltage (V_G) will decrease accordingly, thus the Drain to Source voltage of the MOSFET will decrease.

On the contrary, if the MOSFET is working on the linear region, the LED current control will be an open loop control. The AL5822 will discharge the CC capacitor to decrease V_{VC} and I_{LED}, then the V_G voltage will increase, accordingly, the Drain to Source voltage of the MOSFET will increase.

When in balance, the AL5822 controls the Drain to Source voltage to a certain level to suppress the LED current ripple in an efficient way.

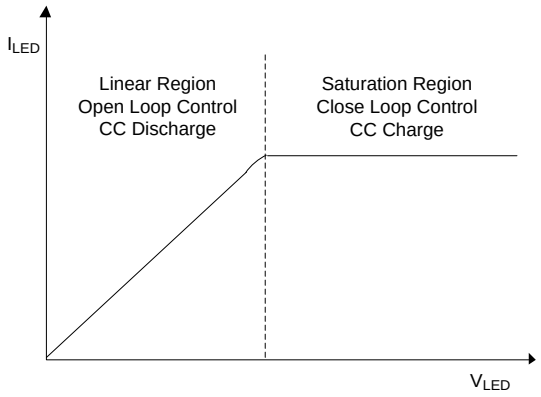

Figure 7. AL5822 Operating Control

MOSFET Drain Voltage Limitation

If the pre-stage output voltage ripple is very large, the external MOSFET Drain to Source voltage will be possibly large accordingly.

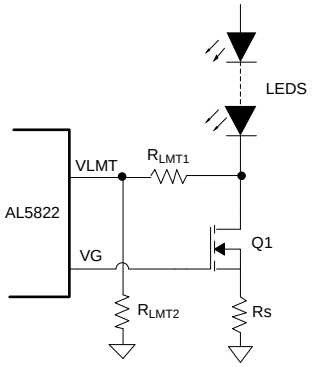

Figure 8. Pin VLMT

© Diodes Incorporated

NEW PRODUCT

Functional Descriptions (Cont.)

Over Current Protection (OCP)

VS pin voltage will be limited to 0.2V (internal the IC), so the LED current will be limited at $0.2V/R_S$. When LED short or hot-plug, the current limit can protect the IC and MOSFET from a damage of over current. The internal current limit is prior to over-voltage protection, which means the limit of MOSFET drain voltage will not work if there's LED over current condition.

Short Circuit Protection (SCP)

The AL5822 monitors the external MOSFET drain voltage, if the drain voltage exceeds V_{D_SHORT} and this voltage keeps there for more than t_{SHT_DELAY}, the IC will enter short circuit protection. When short circuit protection, the IC will turn off the external MOSFET for t_{SHT_HOLD} period, after that, the IC will reset the SCP status and re-check the drain voltage, following the next protection cycle. The V_{D_SHORT} voltage is set as:

$V_{D_SHORT}=2Vx(R_{LMT1}/R_{LMT2}+1)+40\mu AxR_{LMT1}$

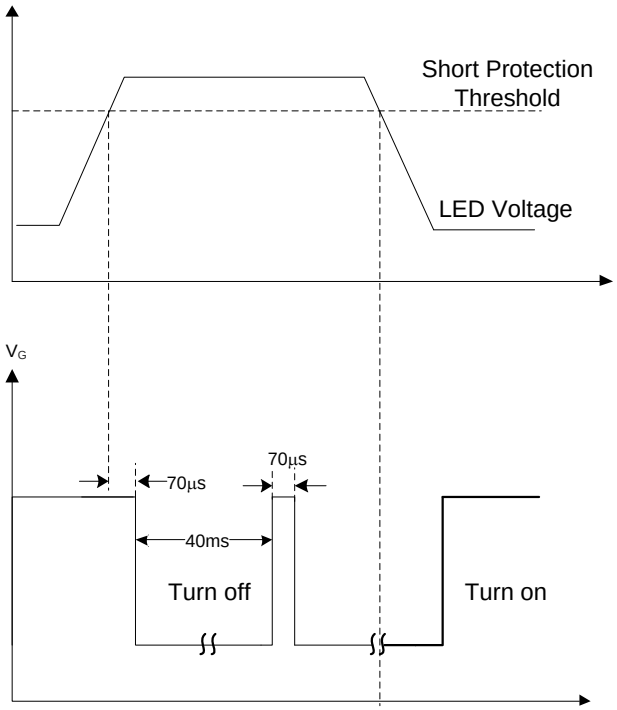

Figure 9. SCP Waveform

© Diodes Incorporated

NEW PRODUCT

Ordering Information

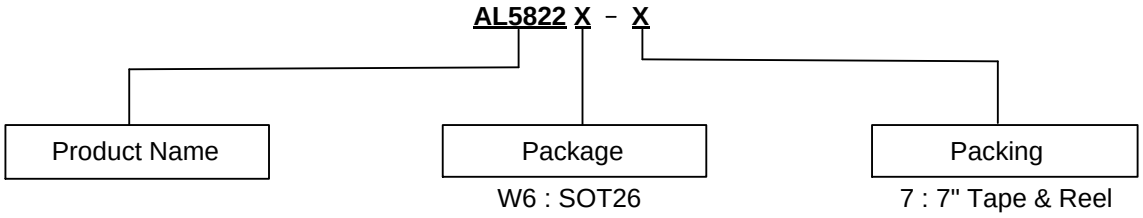

Part Number	Package Code	Package	7"Tape and Reel	
			Quantity	Part Number Suffix
AL5822W6-7	W6	SOT26	3000/Tape & Reel	-7

Marking Information

SOT26

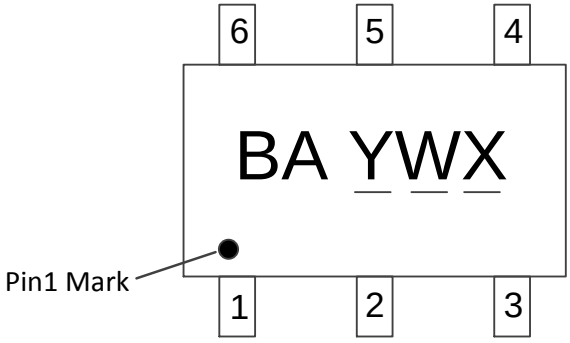

BA: Identification Code
Y: Year 0 to 9
W: Week A to Z: 1 to 26 Week
Week a to z: 27 to 52 Week
z represents 52 and 53 Week
X: Assembly Site Code

© Diodes Incorporated

NEW PRODUCT

Package Outline Dimensions (All dimensions in mm (inch).)

Please see http://www.diodes.com/package-outlines.html for the latest version.

Package Type: SOT26

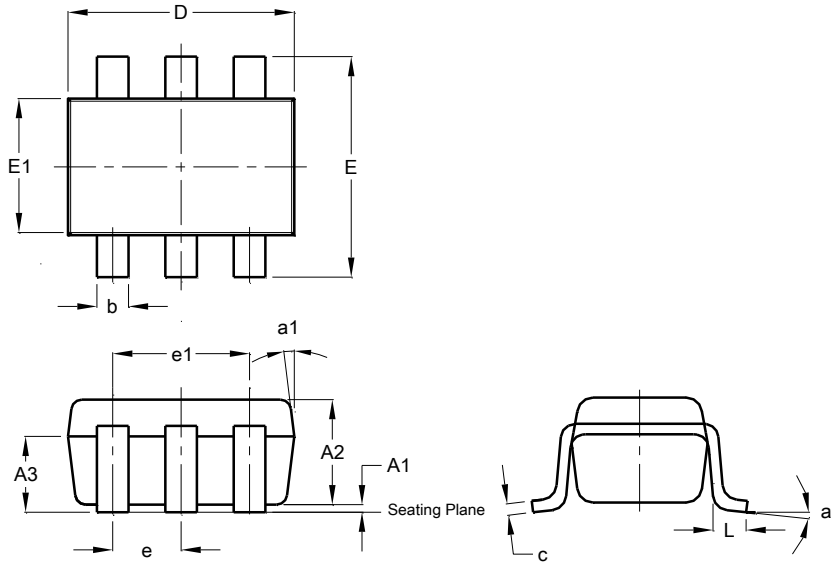

SOT26			
Dim	**Min**	**Max**	**Typ**
A1	0.013	0.10	0.05
A2	1.00	1.30	1.10
A3	0.70	0.80	0.75
b	0.35	0.50	0.38
c	0.10	0.20	0.15
D	2.90	3.10	3.00
e	-	-	0.95
e1	-	-	1.90
E	2.70	3.00	2.80
E1	1.50	1.70	1.60
L	0.35	0.55	0.40
a	-	-	8°
a1	-	-	7°
All Dimensions in mm			

Suggested Pad Layout

Please see http://www.diodes.com/package-outlines.html for the latest version.

Package Type: SOT26

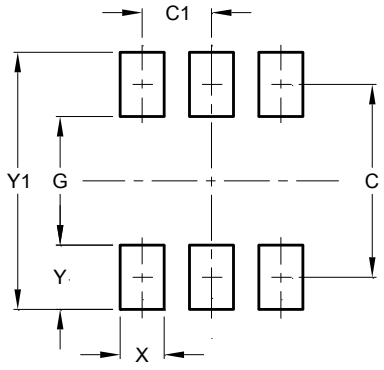

Dimensions	Value (in mm)
C	2.40
C1	0.95
G	1.60
X	0.55
Y	0.80
Y1	3.20

© Diodes Incorporated

NEW PRODUCT

IMPORTANT NOTICE

DIODES INCORPORATED MAKES NO WARRANTY OF ANY KIND, EXPRESS OR IMPLIED, WITH REGARDS TO THIS DOCUMENT, INCLUDING, BUT NOT LIMITED TO, THE IMPLIED WARRANTIES OF MERCHANTABILITY AND FITNESS FOR A PARTICULAR PURPOSE (AND THEIR EQUIVALENTS UNDER THE LAWS OF ANY JURISDICTION).

Diodes Incorporated and its subsidiaries reserve the right to make modifications, enhancements, improvements, corrections or other changes without further notice to this document and any product described herein. Diodes Incorporated does not assume any liability arising out of the application or use of this document or any product described herein; neither does Diodes Incorporated convey any license under its patent or trademark rights, nor the rights of others. Any Customer or user of this document or products described herein in such applications shall assume all risks of such use and will agree to hold Diodes Incorporated and all the companies whose products are represented on Diodes Incorporated website, harmless against all damages.

Diodes Incorporated does not warrant or accept any liability whatsoever in respect of any products purchased through unauthorized sales channel. Should Customers purchase or use Diodes Incorporated products for any unintended or unauthorized application, Customers shall indemnify and hold Diodes Incorporated and its representatives harmless against all claims, damages, expenses, and attorney fees arising out of, directly or indirectly, any claim of personal injury or death associated with such unintended or unauthorized application.

Products described herein may be covered by one or more United States, international or foreign patents pending. Product names and markings noted herein may also be covered by one or more United States, international or foreign trademarks.

This document is written in English but may be translated into multiple languages for reference. Only the English version of this document is the final and determinative format released by Diodes Incorporated.

LIFE SUPPORT

Diodes Incorporated products are specifically not authorized for use as critical components in life support devices or systems without the express written approval of the Chief Executive Officer of Diodes Incorporated. As used herein:

A. Life support devices or systems are devices or systems which:

1. are intended to implant into the body, or

2. support or sustain life and whose failure to perform when properly used in accordance with instructions for use provided in the labeling can be reasonably expected to result in significant injury to the user.

B. A critical component is any component in a life support device or system whose failure to perform can be reasonably expected to cause the failure of the life support device or to affect its safety or effectiveness.

Customers represent that they have all necessary expertise in the safety and regulatory ramifications of their life support devices or systems, and acknowledge and agree that they are solely responsible for all legal, regulatory and safety-related requirements concerning their products and any use of Diodes Incorporated products in such safety-critical, life support devices or systems, notwithstanding any devices- or systems-related information or support that may be provided by Diodes Incorporated. Further, Customers must fully indemnify Diodes Incorporated and its representatives against any damages arising out of the use of Diodes Incorporated products in such safety-critical, life support devices or systems.

Copyright © 2019, Diodes Incorporated

www.diodes.com

ENTEGRECİ

Bu belge www.entegreci.com üzerinden sunulmaktadır.

Elektronik komponent tedarikinde Entegreci

Entegreci, Eskişehir merkezli, Türkiye geneline satış yapan bir elektronik komponent mağazasıdır. Entegreler (IC), mikrodenetleyiciler, transistörler, diyotlar, pasif elemanlar, konnektörler, modüller ve geliştirme kartları tek adetten seri üretim adetlerine kadar satılır. Ürün sayfalarında güncel stok durumunu, fiyatı ve datasheet bağlantısını bulabilirsiniz.

Parça koduyla arama

Üretici parça numarasını yazın; stok ve fiyatı hemen görün.

www.entegreci.com

Ürün kategorileri

Entegreden kapasitöre tüm elektronik komponent kategorileri.

Kategorilere göz atın

Üreticiler

Aradığınız üreticinin ürünlerini tek sayfada inceleyin.

Üreticileri görün

Toplu alım ve teklif

Listede olmayan ya da yüksek adetli parçalar için teklif isteyin.

Teklif isteyin

www.entegreci.com | **destek@entegreci.com** | **0850 305 90 34**

Entegreci is an online electronic components store based in Türkiye. Search by manufacturer part number to see stock, prices and datasheets for integrated circuits, microcontrollers, transistors, passive components and connectors, or request a quote for parts that are not listed.

Bu sayfa Entegreci tarafından eklenmiştir. Belgenin önceki sayfaları asıl yayıncısına aittir ve içeriği değiştirilmemiştir; en güncel sürüm için belgenin yayıncısına başvurun.