Document Number: A3G35H100-04S
Rev. 0, 05/2018

RoHS

RF Power GaN Transistor

A3G35H100-04SR3

3400–3600 MHz, 14 W AVG., 48 V AIRFAST RF POWER GaN TRANSISTOR

This 14 W asymmetrical Doherty RF power GaN transistor is designed for cellular base station applications requiring very wide instantaneous bandwidth capability covering the frequency range of 3400 to 3600 MHz.

This part is characterized and performance is guaranteed for applications operating in the 3400 to 3600 MHz band. There is no guarantee of performance when this part is used in applications designed outside of these frequencies.

3500 MHz

- Typical Doherty Single-Carrier W-CDMA Performance: V_{DD} = 48 Vdc, I_{DQA} = 80 mA, V_{GSB} = –5.0 Vdc, P_{out} = 14 W Avg., Input Signal PAR = 9.9 dB @ 0.01% Probability on CCDF.

Frequency	G_{ps} (dB)	η_D (%)	Output PAR (dB)	ACPR (dBc)
3400 MHz	14.0	43.8	9.6	–34.0
3500 MHz	14.0	41.4	9.7	–34.5
3600 MHz	14.0	42.5	9.6	–32.2

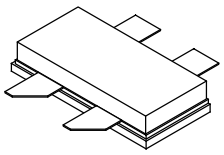

NI-780S-4L

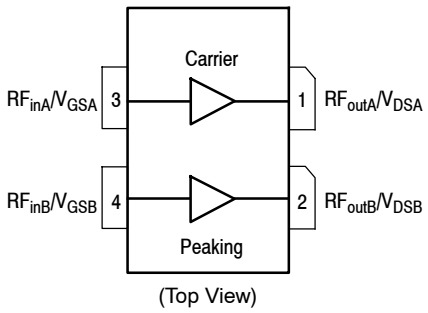

(Top View)

Figure 1. Pin Connections

Features

- High terminal impedances for optimal broadband performance
- Advanced high performance in-package Doherty
- Able to withstand extremely high output VSWR and broadband operating conditions

© 2018 NXP B.V.

Table 1. Maximum Ratings

Rating	Symbol	Value	Unit
Drain-Source Voltage	V_{DSS}	125	Vdc
Gate-Source Voltage	V_{GS}	–8, 0	Vdc
Operating Voltage	V_{DD}	0 to +55	Vdc
Maximum Forward Gate Current @ T_C = 25°C	I_{GMAX}	13.4	mA
Storage Temperature Range	T_{stg}	–65 to +150	°C
Case Operating Temperature Range	T_C	–55 to +150	°C
Operating Junction Temperature Range	T_J	–55 to +225	°C
Absolute Maximum Junction Temperature (1)	T_{MAX}	275	°C

Table 2. Thermal Characteristics

Characteristic	Symbol	Value	Unit
Thermal Resistance by Infrared Measurement, Active Die Surface-to-Case Case Temperature 71°C, P_D = 24.3 W	$R_{\theta JC}$ (IR)	2.3 (2)	°C/W
Thermal Resistance by Finite Element Analysis, Junction-to-Case Case Temperature 90°C, P_D = 24 W	$R_{\theta JC}$ (FEA)	3.88 (3)	°C/W

Table 3. ESD Protection Characteristics

Test Methodology	Class
Human Body Model (per JS-001-2017)	1C
Charge Device Model (per JS-002-2014)	C2

Table 4. Electrical Characteristics (T_A = 25°C unless otherwise noted)

Characteristic	Symbol	Min	Typ	Max	Unit
Off Characteristics (4)					
Drain-Source Breakdown Voltage (V_{GS} = –8 Vdc, I_D = 5.4 mAdc) Carrier (V_{GS} = –8 Vdc, I_D = 8.04 mAdc) Peaking	$V_{(BR)DSS}$	 150 150	—	—	Vdc
On Characteristics - Side A, Carrier					
Gate Threshold Voltage (V_{DS} = 10 Vdc, I_D = 5.4 mAdc)	$V_{GS(th)}$	–3.8	–3.1	–2.3	Vdc
Gate Quiescent Voltage (V_{DD} = 48 Vdc, I_{DA} = 80 mAdc, Measured in Functional Test)	$V_{GSA(Q)}$	–3.6	–2.9	–2.6	Vdc
Gate-Source Leakage Current (V_{DS} = 0 Vdc, V_{GS} = –5 Vdc)	I_{GSS}	–1.7	—	—	mAdc
On Characteristics - Side B, Peaking					
Gate Threshold Voltage (V_{DS} = 10 Vdc, I_D = 8.04 mAdc)	$V_{GS(th)}$	–3.8	–3.2	–2.3	Vdc
Gate-Source Leakage Current (V_{DS} = 0 Vdc, V_{GS} = –5 Vdc)	I_{GSS}	–2.5	—	—	mAdc

1. Functional operation above 225°C has not been characterized and is not implied. Operation at T_{MAX} (275°C) reduces median time to failure by an order of magnitude; operation beyond T_{MAX} could cause permanent damage.
2. Refer to AN1955, *Thermal Measurement Methodology of RF Power Amplifiers.* Go to http://www.nxp.com/RF and search for AN1955.
3. $R_{\theta JC}$ (FEA) must be used for purposes related to reliability and limitations on maximum junction temperature. MTTF may be estimated by the expression MTTF (hours) = $10^{[A + B/(T + 273)]}$, where T is the junction temperature in degrees Celsius, A = –10.3 and B = 8260.
4. Each side of device measured separately.

(continued)

Table 4. Electrical Characteristics (T_A = 25°C unless otherwise noted) **(continued)**

Characteristic	Symbol	Min	Typ	Max	Unit
Functional Tests (1,2) (In NXP Doherty Test Fixture, 50 ohm system) V_{DD} = 48 Vdc, I_{DQA} = 80 mA, V_{GSB} = –5.0 Vdc, P_{out} = 14 W Avg., f = 3600 MHz, Single-Carrier W-CDMA, IQ Magnitude Clipping, Input Signal PAR = 9.9 dB @ 0.01% Probability on CCDF. ACPR measured in 3.84 MHz Channel Bandwidth @ ±5 MHz Offset. **[See note on correct biasing sequence.]**					
Power Gain	G_{ps}	13.0	14.0	15.0	dB
Drain Efficiency	η_D	37.7	42.5	—	%
Output Peak-to-Average Ratio @ 0.01% Probability on CCDF	PAR	8.8	9.6	—	dB
Adjacent Channel Power Ratio	ACPR	—	–32.2	–29.5	dBc
Load Mismatch (2) (In NXP Doherty Test Fixture, 50 ohm system) I_{DQA} = 80 mA, V_{GSB} = –5.1 Vdc, f = 3500 MHz, 12 μsec(on), 10% Duty Cycle					
VSWR 10:1 at 55 Vdc, 158 W Pulsed CW Output Power (3 dB Input Overdrive from 91 W Pulsed CW Rated Power)	No Device Degradation				
Typical Performance (2) (In NXP Doherty Test Fixture, 50 ohm system) V_{DD} = 48 Vdc, I_{DQA} = 80 mA, V_{GSB} = –5.1 Vdc, 3400–3600 MHz Bandwidth					
P_{out} @ 3 dB Compression Point (3)	P3dB	—	100	—	W
AM/PM (Maximum value measured at the P3dB compression point across the 3400–3600 MHz bandwidth)	Φ	—	–32	—	°
VBW Resonance Point (IMD Third Order Intermodulation Inflection Point)	VBW_{res}	—	260	—	MHz
Gain Flatness in 200 MHz Bandwidth @ P_{out} = 14 W Avg.	G_F	—	0.31	—	dB
Gain Variation over Temperature (–30°C to +85°C)	ΔG	—	0.011	—	dB/°C
Output Power Variation over Temperature (–30°C to +85°C)	ΔP1dB	—	0.006	—	dB/°C

Table 5. Ordering Information

Device	Tape and Reel Information	Package
A3G35H100-04SR3	R3 Suffix = 250 Units, 32 mm Tape Width, 13-inch Reel	NI-780S-4L

1. Part internally input matched.
2. Measurements made with device in an asymmetrical Doherty configuration.
3. P3dB = P_{avg} + 7.0 dB where P_{avg} is the average output power measured using an unclipped W-CDMA single-carrier input signal where output PAR is compressed to 7.0 dB @ 0.01% probability on CCDF.

NOTE: Correct Biasing Sequence for GaN Depletion Mode Transistors

Turning the device ON

1. Set V_{GS} to –5 V
2. Turn on V_{DS} to nominal supply voltage (48 V)
3. Increase V_{GS} until I_{DS} current is attained
4. Apply RF input power to desired level

Turning the device OFF

1. Turn RF power off
2. Reduce V_{GS} down to –5 V
3. Reduce V_{DS} down to 0 V (Adequate time must be allowed for V_{DS} to reduce to 0 V to prevent severe damage to device.)
4. Turn off V_{GS}

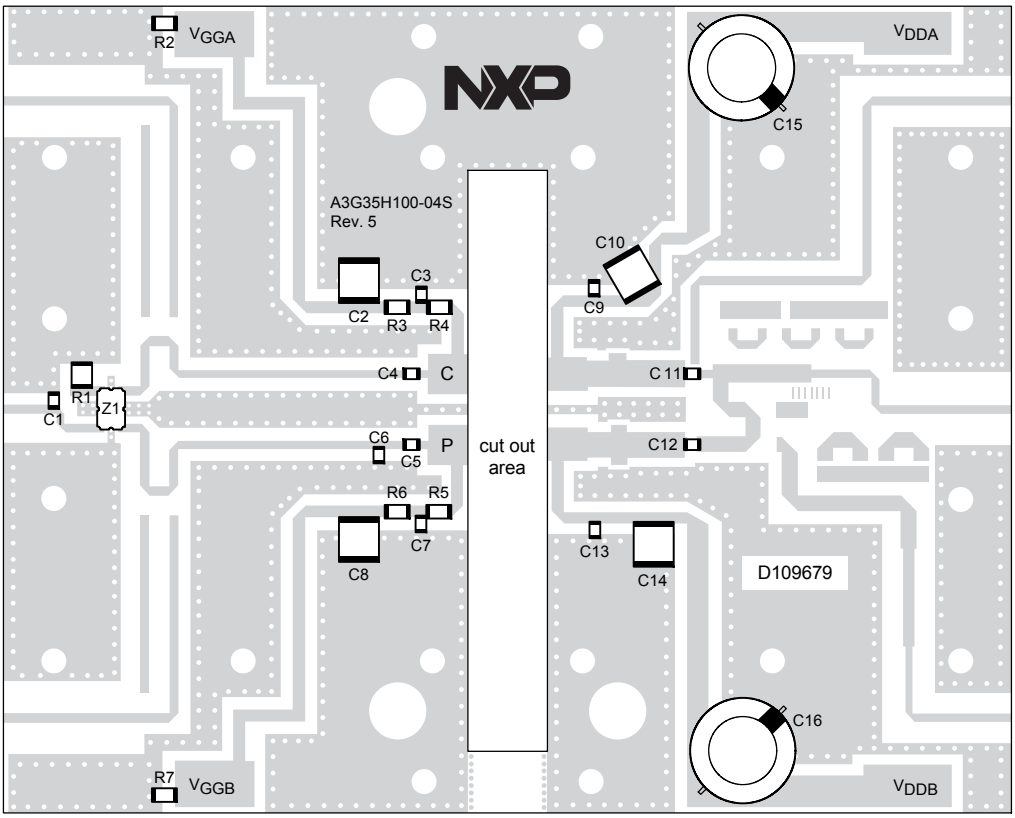

Figure 2. A3G35H100-04SR3 Test Circuit Component Layout

Table 6. A3G35H100-04SR3 Test Circuit Component Designations and Values

Part	Description	Part Number	Manufacturer
C1, C6	0.1 pF Chip Capacitor	ATC600F0R1BT250XT	ATC
C2, C8, C10, C14	10 μF Chip Capacitor	C5750X7S2A106M230KB	TDK
C3, C4, C5, C7, C9, C11, C13	5.1 pF Chip Capacitor	ATC600F5R1BT250XT	ATC
C12	4.3 pF Chip Capacitor	ATC600F4R3BT250XT	ATC
C15, C16	220 μF, 100 V Electrolytic Capacitor	MCGPR100V227M16X26	Multicomp
R1	50 Ω, 10 W Chip Resistor	C10A50Z4	Anaren
R2, R7	51 kΩ, 1/4 W Chip Resistor	CRCW120651K0FKEA	Vishay
R3, R6	3 Ω, 1/4 W Chip Resistor	CRCW12063R00JNEA	Vishay
R4	1.5 Ω, 1/4 W Chip Resistor	RC1206FR-071R5L	Yageo
R5	1 Ω, 1/4 W Chip Resistor	CRCW12061R00FKEA	Vishay
Z1	3300–3800 MHz Band, 90°, 2 dB Hybrid Coupler	X3C35F1-02S	Anaren
PCB	Rogers RO4350B, 0.020″, ε_r = 3.66	D109679	MTL

TYPICAL CHARACTERISTICS — 3400–3600 MHz

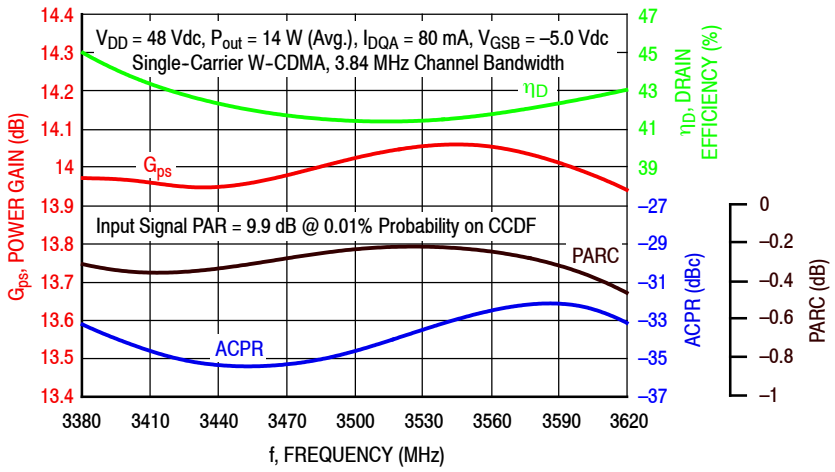

Figure 3. Single-Carrier Output Peak-to-Average Ratio Compression (PARC) Broadband Performance @ P_{out} = 14 Watts Avg.

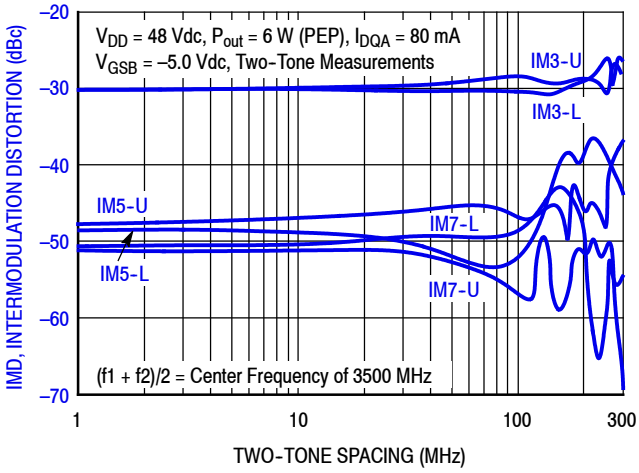

Figure 4. Intermodulation Distortion Products versus Two-Tone Spacing

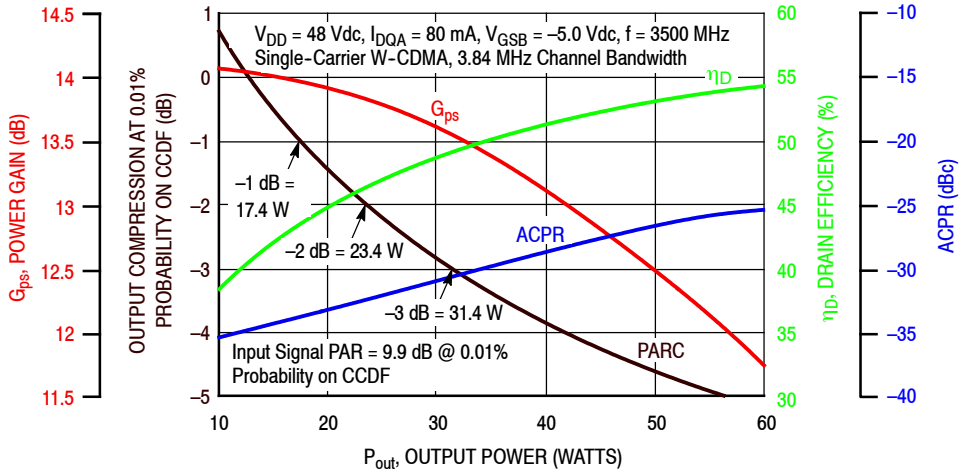

Figure 5. Output Peak-to-Average Ratio Compression (PARC) versus Output Power

TYPICAL CHARACTERISTICS — 3400–3600 MHz

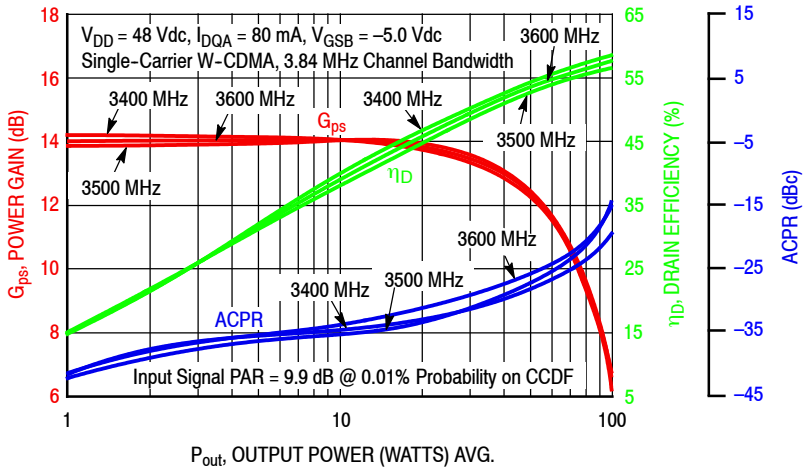

Figure 6. Single-Carrier W-CDMA Power Gain, Drain Efficiency and ACPR versus Output Power

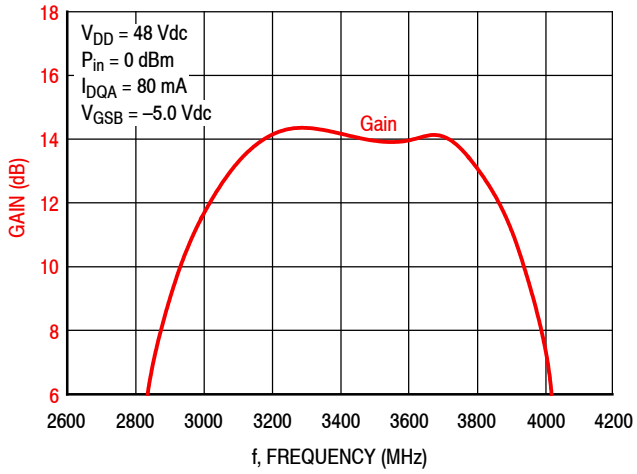

Figure 7. Broadband Frequency Response

PACKAGE DIMENSIONS

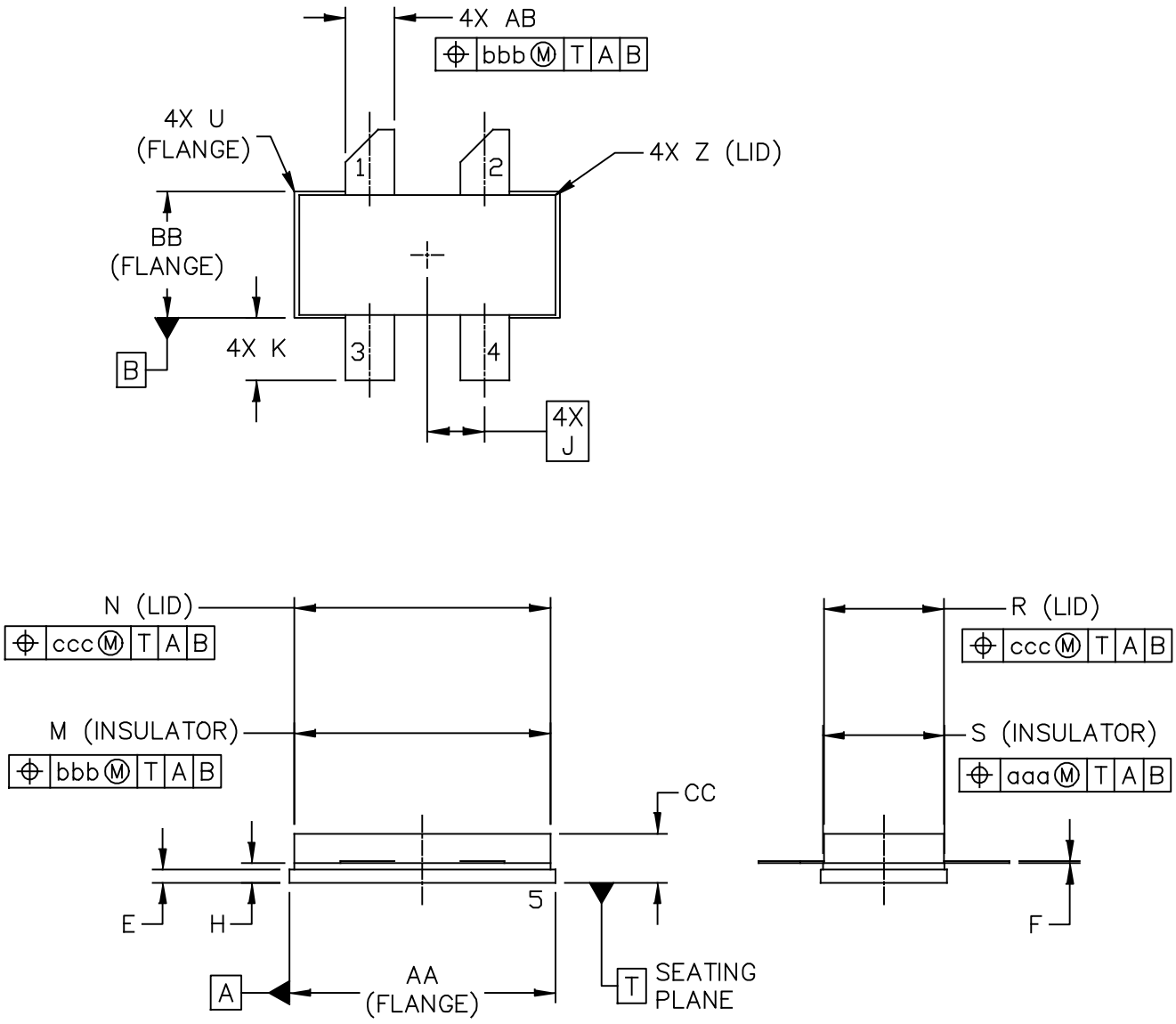

© NXP SEMICONDUCTORS N.V. ALL RIGHTS RESERVED	MECHANICAL OUTLINE	PRINT VERSION NOT TO SCALE
TITLE: NI−780S−4L	DOCUMENT NO: 98ASA10718D	REV: C
	STANDARD: NON−JEDEC	
	SOT1826−1	01 AUG 2016

NOTES:

1. DIMENSIONING AND TOLERANCING PER ANSI Y14.5M–1994.
2. CONTROLLING DIMENSION: INCH.
3. DELETED
4. DIMENSION H IS MEASURED .030 (0.762) AWAY FROM FLANGE TO CLEAR EPOXY FLOW OUT PARALLEL TO DATUM B.

DIM	INCH MIN	INCH MAX	MILLIMETER MIN	MILLIMETER MAX	DIM	INCH MIN	INCH MAX	MILLIMETER MIN	MILLIMETER MAX
AA	.805	.815	20.45	20.70	U		.040		1.02
BB	.382	.388	9.70	9.86	Z		.030		0.76
CC	.125	.170	3.18	4.32	AB	.145	.155	3.68	3.94
E	.035	.045	0.89	1.14					
F	.003	.006	0.08	0.15	aaa		.005		0.127
H	.057	.067	1.45	1.70	bbb		.010		0.254
J	.175 BSC		4.44 BSC		ccc		.015		0.381
K	.170	.210	4.32	5.33					
M	.774	.786	19.61	20.02					
N	.772	.788	19.61	20.02					
R	.365	.375	9.27	9.53					
S	.365	.375	9.27	9.52					

© NXP SEMICONDUCTORS N.V.
ALL RIGHTS RESERVED

MECHANICAL OUTLINE | PRINT VERSION NOT TO SCALE

TITLE: NI–780S–4L

DOCUMENT NO: 98ASA10718D REV: C

STANDARD: NON–JEDEC

SOT1826–1 01 AUG 2016

PRODUCT DOCUMENTATION, SOFTWARE AND TOOLS

Refer to the following resources to aid your design process.

Application Notes

- AN1908: Solder Reflow Attach Method for High Power RF Devices in Air Cavity Packages
- AN1955: Thermal Measurement Methodology of RF Power Amplifiers

Software

- .s2p File

Development Tools

- Printed Circuit Boards

To Download Resources Specific to a Given Part Number:

1. Go to http://www.nxp.com/RF
2. Search by part number
3. Click part number link
4. Choose the desired resource from the drop down menu

REVISION HISTORY

The following table summarizes revisions to this document.

Revision	Date	Description
0	May 2018	• Initial release of data sheet

How to Reach Us:

Home Page:
nxp.com

Web Support:
nxp.com/support

Information in this document is provided solely to enable system and software implementers to use NXP products. There are no express or implied copyright licenses granted hereunder to design or fabricate any integrated circuits based on the information in this document. NXP reserves the right to make changes without further notice to any products herein.

NXP makes no warranty, representation, or guarantee regarding the suitability of its products for any particular purpose, nor does NXP assume any liability arising out of the application or use of any product or circuit, and specifically disclaims any and all liability, including without limitation consequential or incidental damages. “Typical” parameters that may be provided in NXP data sheets and/or specifications can and do vary in different applications, and actual performance may vary over time. All operating parameters, including “typicals,” must be validated for each customer application by customer’s technical experts. NXP does not convey any license under its patent rights nor the rights of others. NXP sells products pursuant to standard terms and conditions of sale, which can be found at the following address: nxp.com/SalesTermsandConditions.

NXP, the NXP logo and Airfast are trademarks of NXP B.V. All other product or service names are the property of their respective owners.
© 2018 NXP B.V.

Document Number: A3G35H100-04S
Rev. 0, 05/2018

ENTEGRECİ

Bu belge www.entegreci.com üzerinden sunulmaktadır.

Elektronik komponent tedarikinde Entegreci

Entegreci, Eskişehir merkezli, Türkiye geneline satış yapan bir elektronik komponent mağazasıdır. Entegreler (IC), mikrodenetleyiciler, transistörler, diyotlar, pasif elemanlar, konnektörler, modüller ve geliştirme kartları tek adetten seri üretim adetlerine kadar satılır. Ürün sayfalarında güncel stok durumunu, fiyatı ve datasheet bağlantısını bulabilirsiniz.

Parça koduyla arama

Üretici parça numarasını yazın; stok ve fiyatı hemen görün.

www.entegreci.com

Ürün kategorileri

Entegreden kapasitöre tüm elektronik komponent kategorileri.

Kategorilere göz atın

Üreticiler

Aradığınız üreticinin ürünlerini tek sayfada inceleyin.

Üreticileri görün

Toplu alım ve teklif

Listede olmayan ya da yüksek adetli parçalar için teklif isteyin.

Teklif isteyin

www.entegreci.com | **destek@entegreci.com** | **0850 305 90 34**

Entegreci is an online electronic components store based in Türkiye. Search by manufacturer part number to see stock, prices and datasheets for integrated circuits, microcontrollers, transistors, passive components and connectors, or request a quote for parts that are not listed.

Bu sayfa Entegreci tarafından eklenmiştir. Belgenin önceki sayfaları asıl yayıncısına aittir ve içeriği değiştirilmemiştir; en güncel sürüm için belgenin yayıncısına başvurun.