9A, 900V N-CHANNEL POWER MOSFET

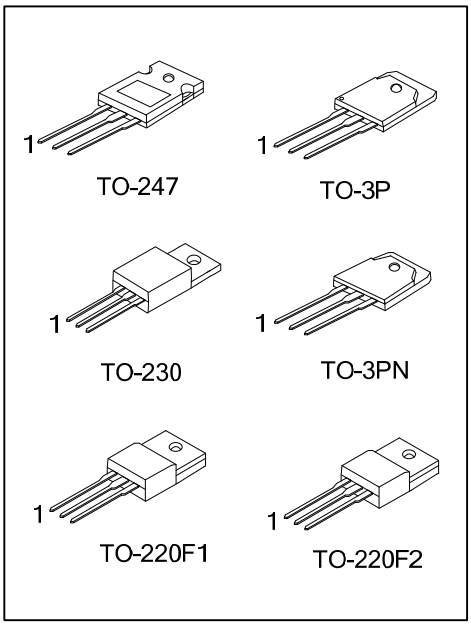

■ DESCRIPTION

The UTC **9N90** uses UTC's advanced proprietary, planar stripe, DMOS technology to provide excellent $R_{DS(ON)}$, low gate charge and operation with low gate voltages. This device is suitable for use as a load switch or in PWM applications.

■ FEATURES

* $R_{DS(ON)}$ < 1.2Ω @ V_{GS} = 10V, I_D = 4.5A
* Ultra Low Gate Charge (Typical 45 nC)
* Low Reverse Transfer Capacitance (CRSS = Typical 14 pF)
* Fast Switching Capability
* Avalanche Energy Specified
* Improved dv/dt Capability, High Ruggedness

■ SYMBOL

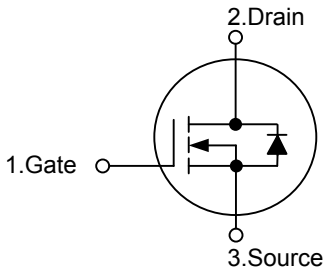

■ ORDERING INFORMATION

Ordering Number		Package	Pin Assignment			Packing
Lead Free	Halogen Free		1	2	3	
9N90L-TC3-T	9N90G-TC3-T	TO-230	G	D	S	Tube
9N90L-TF1-T	9N90G-TF1-T	TO-220F1	G	D	S	Tube
9N90L-TF2-T	9N90G-TF2-T	TO-220F2	G	D	S	Tube
9N90L-T3P-T	9N90G-T3P-T	TO-3P	G	D	S	Tube
9N90L-T3N-T	9N90G-T3N-T	TO-3PN	G	D	S	Tube
9N90L-T47-T	9N90G-T47-T	TO-247	G	D	S	Tube

Note: Pin Assignment: G: Gate D: Drain S: Source

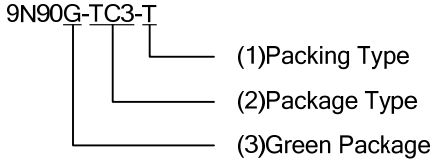

(1) T: Tube

(2) TC3: TO-230, TF1: TO-220F1, TF2: TO-220F2, T3P: TO-3P, T3N: TO-3PN, T47: TO-247

(3) G: Halogen Free and Lead Free, L: Lead Free

Copyright © 2017 Unisonic Technologies Co., Ltd

■ MARKING

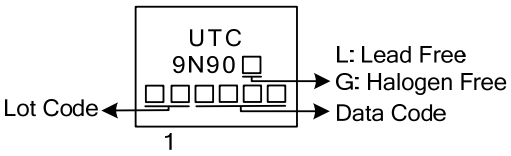

■ ABSOLUTE MAXIMUM RATING (T_C =25°C, unless otherwise specified)

PARAMETER		SYMBOL	RATINGS	UNIT
Drain-Source Voltage		V_{DSS}	900	V
Gate-Source Voltage		V_{GSS}	±30	V
Continuous Drain Current (T_C = 25°C)		I_D	9.0	A
Pulsed Drain Current (Note 2)		I_{DM}	36	A
Avalanche Current (Note 2)		I_{AR}	9.0	A
Avalanche Energy	Single Pulsed(Note 3)	E_{AS}	900	mJ
	Repetitive(Note 2)	E_{AR}	28	mJ
Peak Diode Recovery dv/dt (Note 4)		dv/dt	4.0	V/ns
Power Dissipation	TO-247	P_D	160	W
	TO-3P/TO-3PN		240	W
	TO-230		147	
	TO-220F1		56	
	TO-220F2		58	
Linear Derating Factor above T_C = 25°C	TO-247		1.28	W/°C
	TO-3P/TO-3PN		1.92	
	TO-230		1.176	
	TO-220F1		0.448	
	TO-220F2		0.464	
Junction Temperature		T_J	+150	°C
Storage Temperature		T_{STG}	-55 ~ +150	°C

Notes: 1. Absolute maximum ratings are those values beyond which the device could be permanently damaged. Absolute maximum ratings are stress ratings only and functional device operation is not implied.
2. Repetitive Rating : Pulse width limited by maximum junction temperature
3. L = 21mH, I_{AS} = 9.0A, V_{DD} = 50V, R_G = 25 Ω, Starting T_J = 25°C
4. I_{SD}≤9.0A, di/dt ≤ 200A/μs, V_{DD}≤ BV_{DSS}, Starting T_J = 25°C

■ THERMAL DATA

PARAMETER		SYMBOL	RATINGS	UNIT
Junction to Ambient	TO-247	θ_{JA}	50	°C/W
	TO-3P/TO-3PN		40	
	TO-220F1/ TO-220F2 TO-230		62.5	
Junction to Case	TO-247	θ_{JC}	0.78	°C/W
	TO-3P/TO-3PN		0.52	
	TO-230		0.85	
	TO-220F1		2.25	
	TO-220F2		2.15	

■ ELECTRICAL CHARACTERISTICS (T_J=25°C, unless otherwise specified)

PARAMETER		SYMBOL	TEST CONDITIONS	MIN	TYP	MAX	UNIT
OFF CHARACTERISTICS							
Drain-Source Breakdown Voltage		BV_{DSS}	V_{GS} = 0 V, I_D = 250μA	900			V
Drain-Source Leakage Current		I_{DSS}	V_{DS} = 900 V, V_{GS} = 0 V			10	μA
Gate-Body Leakage Current	Forward	I_{GSSF}	V_{GS} = 30 V, V_{DS} = 0 V			100	nA
	Reverse	I_{GSSR}	V_{GS} = -30 V, V_{DS} = 0 V			-100	nA
ON CHARACTERISTICS							
Gate Threshold Voltage		$V_{GS(TH)}$	V_{DS} = V_{GS}, I_D = 250μA	3.0		5.0	V
Static Drain-Source On-Resistance		$R_{DS(ON)}$	V_{GS} = 10V, I_D = 4.5A			1.2	Ω
DYNAMIC PARAMETERS							
Input Capacitance		C_{ISS}	V_{DS} = 25 V, V_{GS} = 0 V, f = 1.0 MHz		1870		pF
Output Capacitance		C_{OSS}			185		pF
Reverse Transfer Capacitance		C_{RSS}			21		pF
SWITCHING CHARACTERISTICS							
Total Gate Charge(Note 1)		Q_G	V_{DS} = 50V, V_{GS} = 10 V, I_D = 1.3A, I_G = 100μA (Note 1,2)		215		nC
Gate-Source Charge		Q_{GS}			17		nC
Gate-Drain Charge		Q_{GD}			44		nC
Turn-On Delay Time(Note 1)		$t_{D(ON)}$	V_{DD} = 30V, V_{GS} = 10V, I_D =0.5 A, R_G = 25Ω (Note 1, 2)		100		ns
Turn-On Rise Time		t_R			170		ns
Turn-Off Delay Time		$t_{D(OFF)}$			410		ns
Turn-Off Fall Time		t_F			175		ns
DRAIN-SOURCE DIODE CHARACTERISTICS AND MAXIMUM RATINGS							
Maximum Continuous Drain-Source Diode Forward Current		I_S				9.0	A
Maximum Pulsed Drain-Source Diode Forward Current		I_{SM}				36	A
Drain-Source Diode Forward Voltage (Note 1)		V_{SD}	V_{GS} = 0 V, I_S = 9.0 A			1.4	V
Reverse Recovery Time(Note 1)		t_{rr}	V_{GS} = 0 V, I_S = 9.0 A, d_{IF} / dt =100 A/μs (Note 1)		550		ns
Reverse Recovery Charge		Q_{rr}			6.5		μC

Notes: 1. Pulse Test: Pulse width ≤ 300μs, Duty cycle ≤ 2%.
2. Essentially independent of operating temperature.

■ TEST CIRCUITS AND WAVEFORMS

Peak Diode Recovery dv/dt Test Circuit & Waveforms

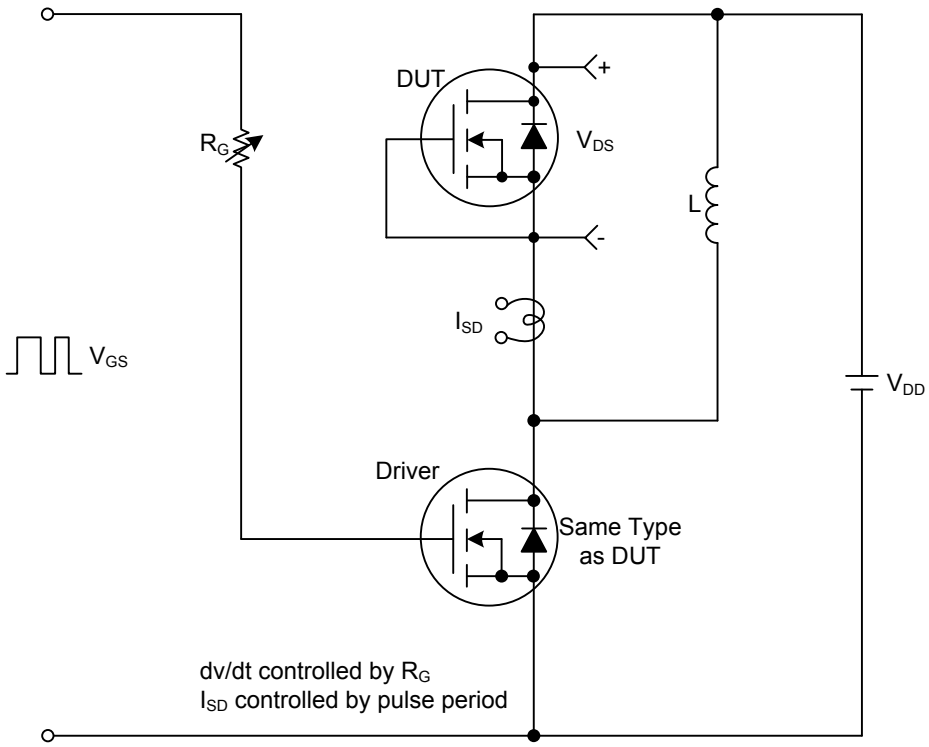

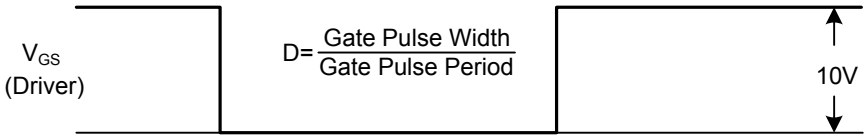

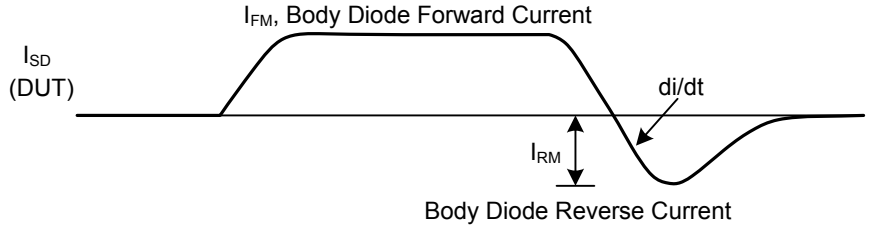

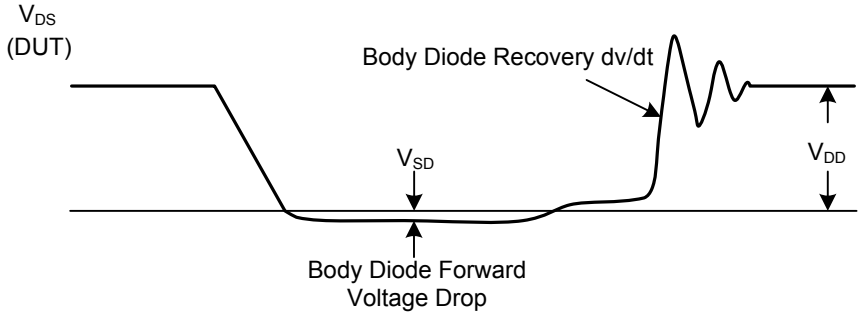

■ TEST CIRCUITS AND WAVEFORMS (Cont.)

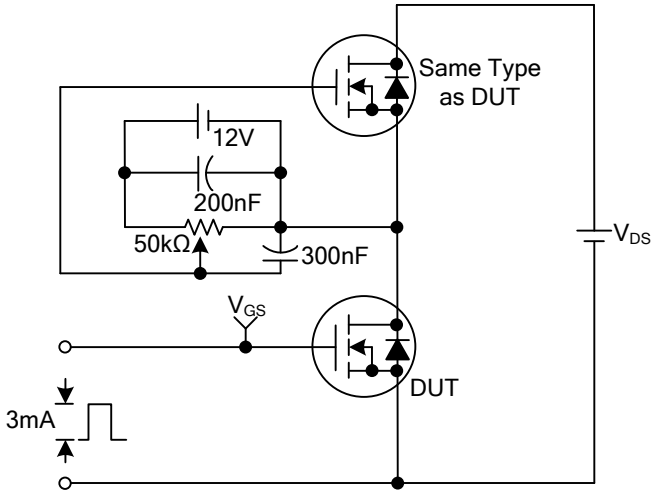

Gate Charge Test Circuit

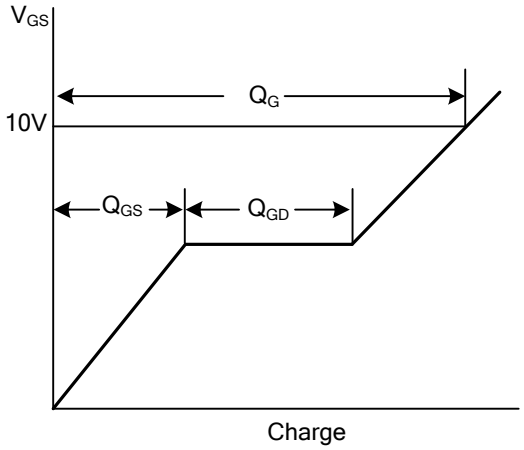

Gate Charge Waveforms

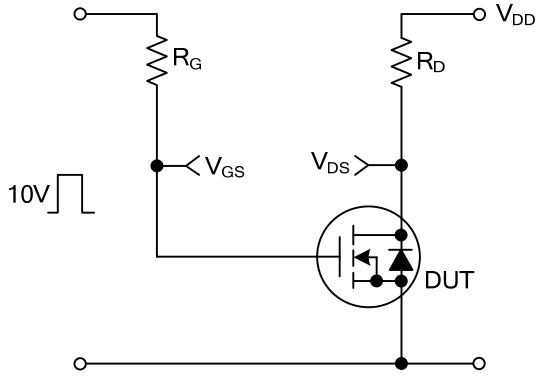

Resistive Switching Test Circuit

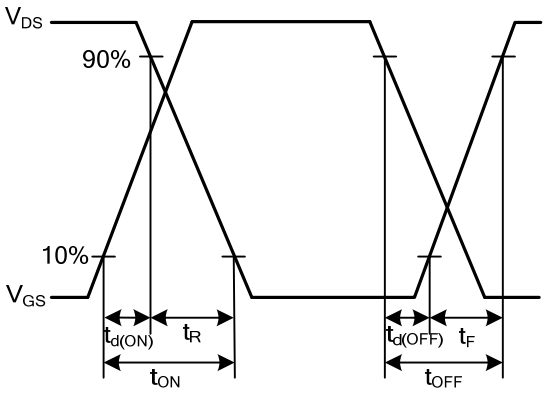

Resistive Switching Waveforms

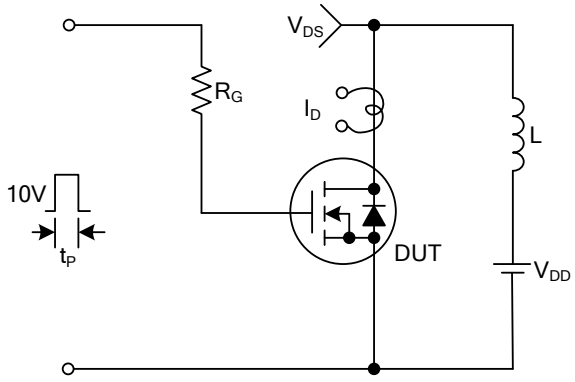

Unclamped Inductive Switching Test Circuit

$$E_{AS}=\frac{1}{2}LI_{AS}^{2}\frac{BV_{DSS}}{BV_{DSS}-V_{DD}}$$

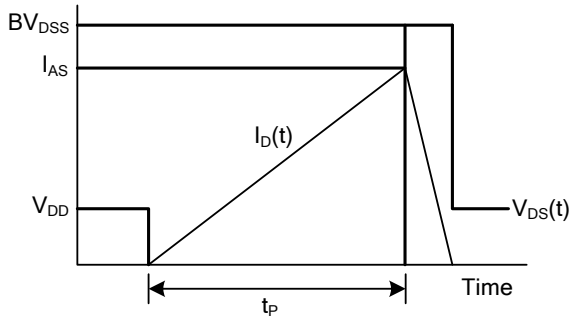

Unclamped Inductive Switching Waveforms

■ TYPICAL CHARACTERISTICS

Drain Current vs. Drain-Source Breakdown Voltage

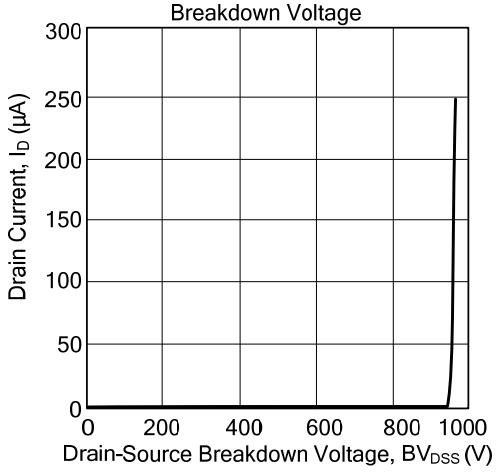

Drain Current vs. Gate Threshold Voltage

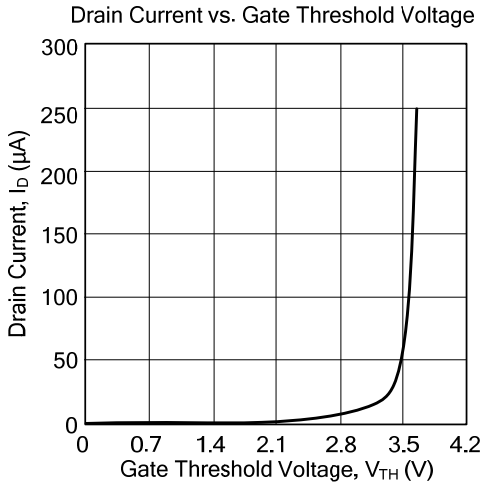

Drain-Source On-State Resistance Characteristics

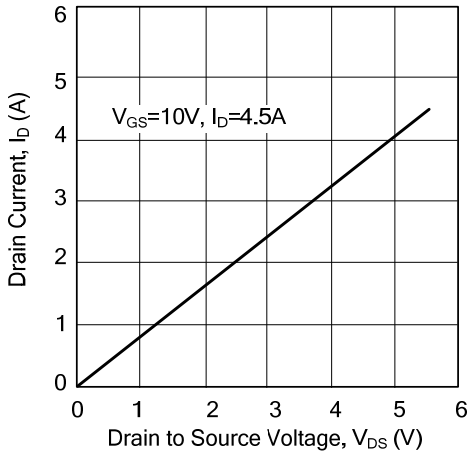

Continuous Drain-Source Diode Forward Current vs. Source to Drain Voltage

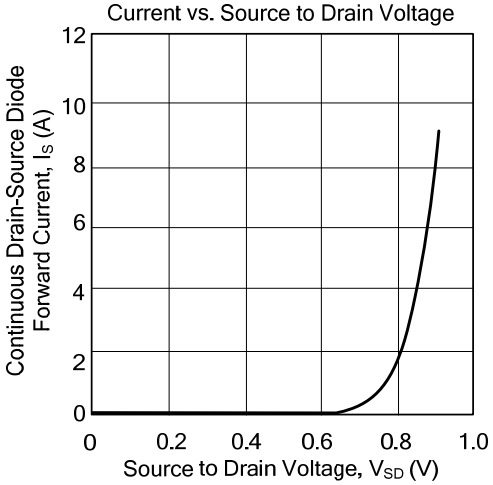

Maximum Safe Operating Area

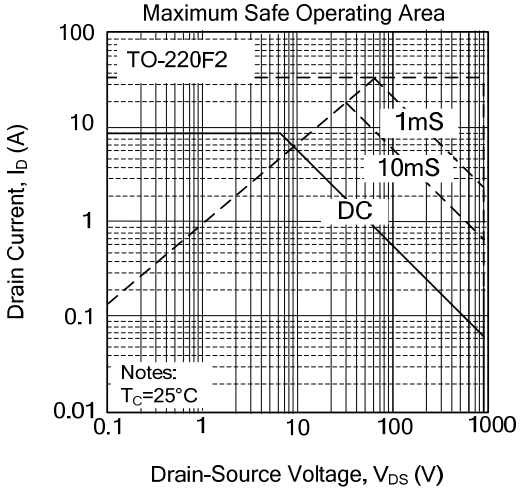

UTC assumes no responsibility for equipment failures that result from using products at values that exceed, even momentarily, rated values (such as maximum ratings, operating condition ranges, or other parameters) listed in products specifications of any and all UTC products described or contained herein. UTC products are not designed for use in life support appliances, devices or systems where malfunction of these products can be reasonably expected to result in personal injury. Reproduction in whole or in part is prohibited without the prior written consent of the copyright owner. The information presented in this document does not form part of any quotation or contract, is believed to be accurate and reliable and may be changed without notice.

ENTEGRECİ

Bu belge www.entegreci.com üzerinden sunulmaktadır.

Elektronik komponent tedarikinde Entegreci

Entegreci, Eskişehir merkezli, Türkiye geneline satış yapan bir elektronik komponent mağazasıdır. Entegreler (IC), mikrodenetleyiciler, transistörler, diyotlar, pasif elemanlar, konnektörler, modüller ve geliştirme kartları tek adetten seri üretim adetlerine kadar satılır. Ürün sayfalarında güncel stok durumunu, fiyatı ve datasheet bağlantısını bulabilirsiniz.

Parça koduyla arama

Üretici parça numarasını yazın; stok ve fiyatı hemen görün.

www.entegreci.com

Ürün kategorileri

Entegreden kapasitöre tüm elektronik komponent kategorileri.

Kategorilere göz atın

Üreticiler

Aradığınız üreticinin ürünlerini tek sayfada inceleyin.

Üreticileri görün

Toplu alım ve teklif

Listede olmayan ya da yüksek adetli parçalar için teklif isteyin.

Teklif isteyin

www.entegreci.com | **destek@entegreci.com** | **0850 305 90 34**

Entegreci is an online electronic components store based in Türkiye. Search by manufacturer part number to see stock, prices and datasheets for integrated circuits, microcontrollers, transistors, passive components and connectors, or request a quote for parts that are not listed.

Bu sayfa Entegreci tarafından eklenmiştir. Belgenin önceki sayfaları asıl yayıncısına aittir ve içeriği değiştirilmemiştir; en güncel sürüm için belgenin yayıncısına başvurun.