Power MOSFET

TO-247

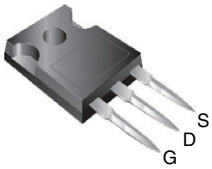

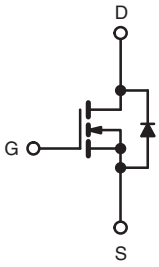

N-Channel MOSFET

FEATURES

- Dynamic dV/dt rating
- Repetitive avalanche rated
- Isolated central mounting hole
- Fast switching
- Ease of paralleling
- Simple drive requirements
- Material categorization: for definitions of compliance please see www.vishay.com/doc?99912

RoHS* Available

Note

* This datasheet provides information about parts that are RoHS-compliant and / or parts that are non RoHS-compliant. For example, parts with lead (Pb) terminations are not RoHS-compliant. Please see the information / tables in this datasheet for details

PRODUCT SUMMARY		
V_{DS} (V)	500	
$R_{DS(on)}$ (Ω)	V_{GS} = 10 V	0.27
Q_g (max.) (nC)	210	
Q_{gs} (nC)	29	
Q_{gd} (nC)	110	
Configuration	Single	

DESCRIPTION

Third generation Power MOSFETs from Vishay provide the designer with the best combination of fast switching, ruggedized device design, low on-resistance and cost-effectiveness.

The TO-247 package is preferred for commercial-industrial applications where higher power levels preclude the use of TO-220 devices. The TO-247 is similar but superior to the earlier TO-218 package because its isolated mounting hole. It also provides greater creepage distances between pins to meet the requirements of most safety specifications.

ORDERING INFORMATION	
Package	TO-247
Lead (Pb)-free	IRFP460PbF

ABSOLUTE MAXIMUM RATINGS T_C = 25 °C, unless otherwise noted

PARAMETER			SYMBOL	LIMIT	UNIT
Drain-source voltage			V_{DS}	500	V
Gate-source voltage			V_{GS}	± 20	
Continuous drain current	V_{GS} at 10 V	T_C = 25 °C	I_D	20	A
		T_C = 100 °C		13	
Pulsed drain current [a]			I_{DM}	80	
Linear derating factor				2.2	W/°C
Single pulse avalanche energy [b]			E_{AS}	960	mJ
Repetitive avalanche current [a]			I_{AR}	20	A
Repetitive avalanche energy [a]			E_{AR}	28	mJ
Maximum power dissipation	T_C = 25 °C		P_D	280	W
Peak diode recovery dV/dt [c]			dV/dt	3.5	V/ns
Operating junction and storage temperature range			T_J, T_{stg}	-55 to +150	°C
Soldering recommendations (peak temperature)	for 10 s			300 [d]	
Mounting Torque	6-32 or M3 screw			10	lbf · in
				1.1	N · m

Notes

a. Repetitive rating; pulse width limited by maximum junction temperature (see fig. 11)
b. V_{DD} = 50 V, starting T_J = 25 °C, L = 4.3 mH, R_G = 25 Ω, I_{AS} = 20 A (see fig. 12)
c. I_{SD} ≤ 20 A, dI/dt ≤ 160 A/μs, V_{DD} ≤ V_{DS}, T_J ≤ 150 °C
d. 1.6 mm from case

For technical questions, contact: hvmos.techsupport@vishay.com

THIS DOCUMENT IS SUBJECT TO CHANGE WITHOUT NOTICE. THE PRODUCTS DESCRIBED HEREIN AND THIS DOCUMENT ARE SUBJECT TO SPECIFIC DISCLAIMERS, SET FORTH AT www.vishay.com/doc?91000

THERMAL RESISTANCE RATINGS				
PARAMETER	**SYMBOL**	**TYP.**	**MAX.**	**UNIT**
Maximum junction-to-ambient	R_{thJA}	-	40	°C/W
Case-to-sink, flat, greased surface	R_{thCS}	0.24	-	
Maximum junction-to-case (drain)	R_{thJC}	-	0.45	

SPECIFICATIONS T_J = 25 °C, unless otherwise noted						
PARAMETER	**SYMBOL**	**TEST CONDITIONS**	**MIN.**	**TYP.**	**MAX.**	**UNIT**
Static						
Drain-source breakdown voltage	V_{DS}	V_{GS} = 0 V, I_D = 250 µA	500	-	-	V
V_{DS} temperature coefficient	$\Delta V_{DS}/T_J$	Reference to 25 °C, I_D = 1 mA	-	0.63	-	V/°C
Gate-source threshold voltage	$V_{GS(th)}$	V_{DS} = V_{GS}, I_D = 250 µA	2.0	-	4.0	V
Gate-source leakage	I_{GSS}	V_{GS} = ± 20 V	-	-	± 100	nA
Zero gate voltage drain current	I_{DSS}	V_{DS} = 500 V, V_{GS} = 0 V	-	-	25	µA
		V_{DS} = 400 V, V_{GS} = 0 V, T_J = 125 °C	-	-	250	
Drain-source on-state resistance	$R_{DS(on)}$	V_{GS} = 10 V; I_D = 12 A[b]	-	-	0.27	Ω
Forward transconductance	g_{fs}	V_{DS} = 50 V, I_D = 12 A[b]	13	-	-	S
Dynamic						
Input capacitance	C_{iss}	V_{GS} = 0 V, V_{DS} = 25 V, f = 1.0 MHz, see fig. 5	-	4200	-	pF
Output capacitance	C_{oss}		-	870	-	
Reverse transfer capacitance	C_{rss}		-	350	-	
Total gate charge	Q_g	V_{GS} = 10 V; I_D = 20 A, V_{DS} = 400 V see fig. 6 and 13[b]	-	-	210	nC
Gate-source charge	Q_{gs}		-	-	29	
Gate-drain charge	Q_{gd}		-	-	110	
Turn-on delay time	$t_{d(on)}$	V_{DD} = 250 V, I_D = 20 A , R_G = 4.3 Ω, R_D = 13 Ω, see fig. 10[b]	-	18	-	ns
Rise time	t_r		-	59	-	
Turn-off delay time	$t_{d(off)}$		-	110	-	
Fall time	t_f		-	58	-	
Internal drain inductance	L_D	Between lead, 6 mm (0.25") from package and center of die contact 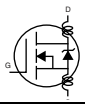	-	5.0	-	nH
Internal source inductance	L_S		-	13	-	
Drain-Source Body Diode Characteristics						
Continuous source-drain diode current	I_S	MOSFET symbol showing the integral reverse p - n junction diode 	-	-	20	A
Pulsed diode forward current [a]	I_{SM}		-	-	80	
Body diode voltage	V_{SD}	T_J = 25 °C, I_S = 20 A, V_{GS} = 0 V[b]	-	-	1.8	V
Body diode reverse recovery time	t_{rr}	T_J = 25 °C, I_F = 20A, dI/dt = 100 A/µs[b]	-	570	860	ns
Body diode reverse recovery charge	Q_{rr}		-	5.7	8.6	µC
Forward turn-on time	t_{on}	Intrinsic turn-on time is negligible (turn-on is dominated by L_S and L_D)				

Notes

a. Repetitive rating; pulse width limited by maximum junction temperature (see fig. 11)

b. Pulse width ≤ 300 µs; duty cycle ≤ 2 %

For technical questions, contact: hvmos.techsupport@vishay.com
THIS DOCUMENT IS SUBJECT TO CHANGE WITHOUT NOTICE. THE PRODUCTS DESCRIBED HEREIN AND THIS DOCUMENT ARE SUBJECT TO SPECIFIC DISCLAIMERS, SET FORTH AT www.vishay.com/doc?91000

TYPICAL CHARACTERISTICS 25 °C, unless otherwise noted

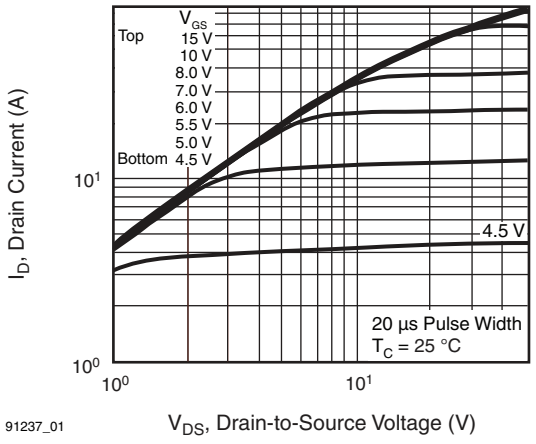

Fig. 1 - Typical Output Characteristics, T_C = 25 °C

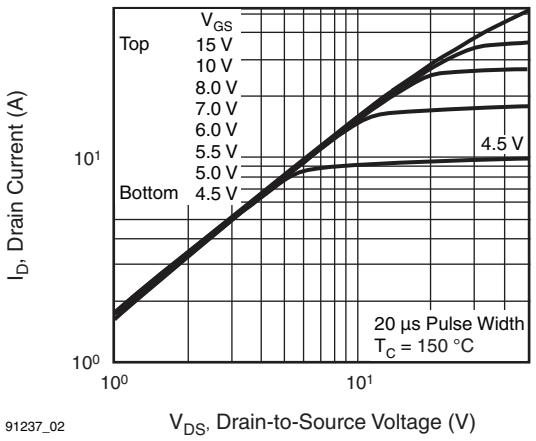

Fig. 2 - Typical Output Characteristics, T_C = 150 °C

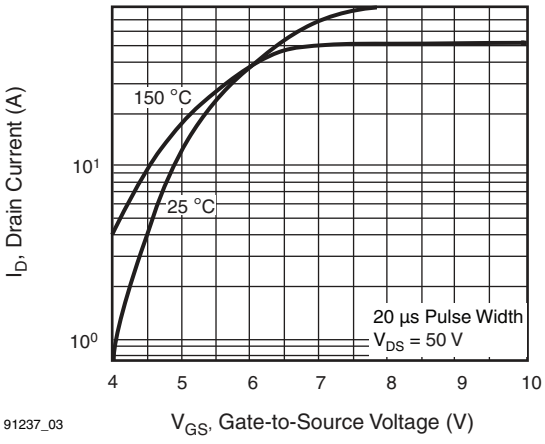

Fig. 3 - Typical Transfer Characteristics

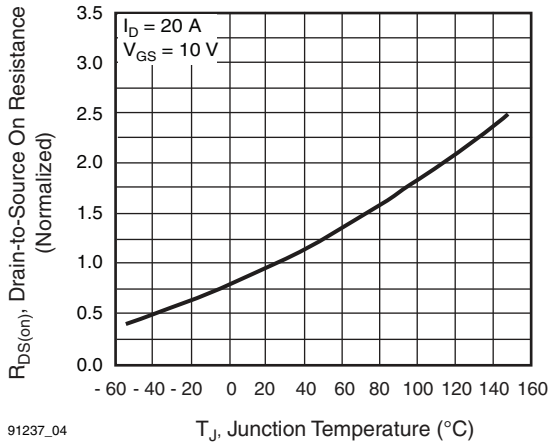

Fig. 4 - Normalized On-Resistance vs. Temperature

For technical questions, contact: hvmos.techsupport@vishay.com

THIS DOCUMENT IS SUBJECT TO CHANGE WITHOUT NOTICE. THE PRODUCTS DESCRIBED HEREIN AND THIS DOCUMENT ARE SUBJECT TO SPECIFIC DISCLAIMERS, SET FORTH AT www.vishay.com/doc?91000

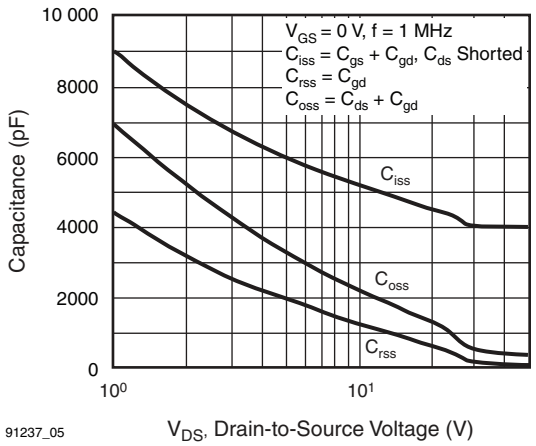

Fig. 5 - Typical Capacitance vs. Drain-to-Source Voltage

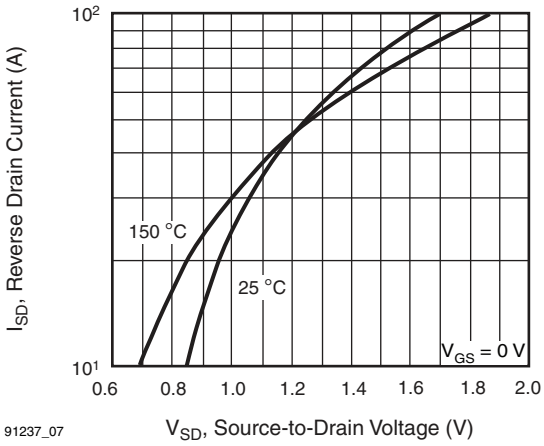

Fig. 7 - Typical Source-Drain Diode Forward Voltage

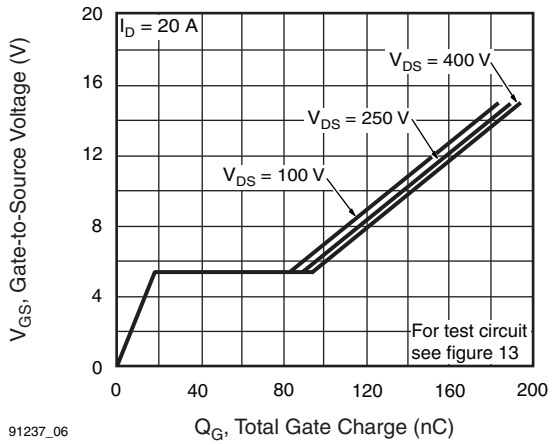

Fig. 6 - Typical Gate Charge vs. Gate-to-Source Voltage

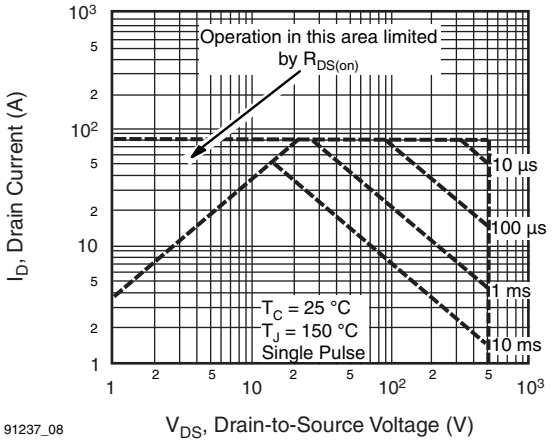

Fig. 8 - Maximum Safe Operating Area

For technical questions, contact: hvmos.techsupport@vishay.com

THIS DOCUMENT IS SUBJECT TO CHANGE WITHOUT NOTICE. THE PRODUCTS DESCRIBED HEREIN AND THIS DOCUMENT ARE SUBJECT TO SPECIFIC DISCLAIMERS, SET FORTH AT www.vishay.com/doc?91000

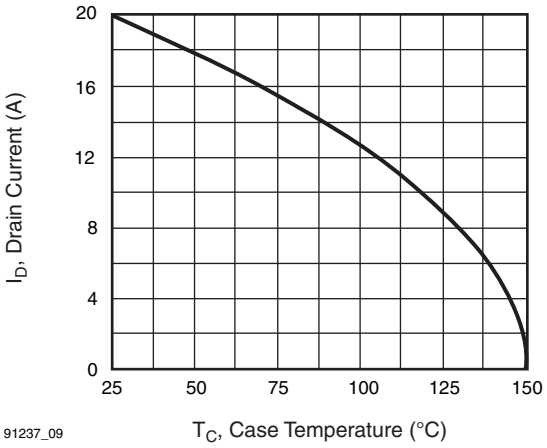

Fig. 9 - Maximum Drain Current vs. Case Temperature

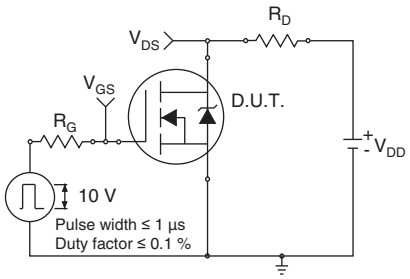

Fig. 10 - Switching Time Test Circuit

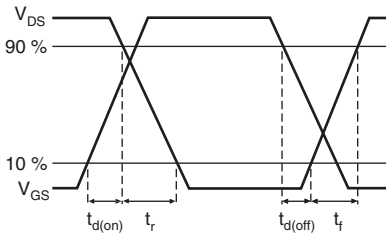

Fig. 11 - Switching Time Waveforms

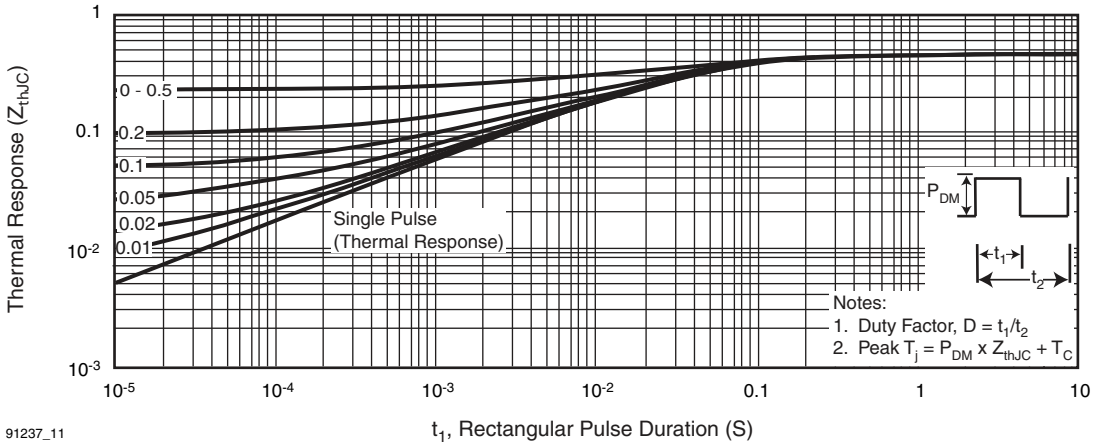

Fig. 12 - Maximum Effective Transient Thermal Impedance, Junction-to-Case

For technical questions, contact: hvmos.techsupport@vishay.com
THIS DOCUMENT IS SUBJECT TO CHANGE WITHOUT NOTICE. THE PRODUCTS DESCRIBED HEREIN AND THIS DOCUMENT ARE SUBJECT TO SPECIFIC DISCLAIMERS, SET FORTH AT www.vishay.com/doc?91000

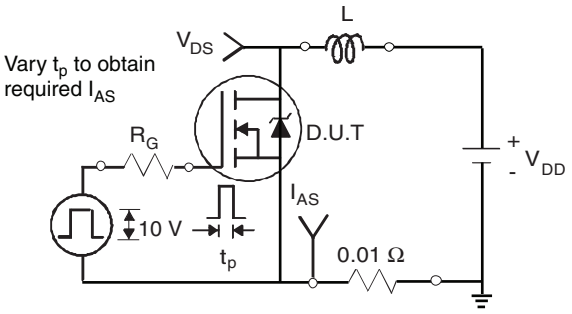

Fig. 13 - Unclamped Inductive Test Circuit

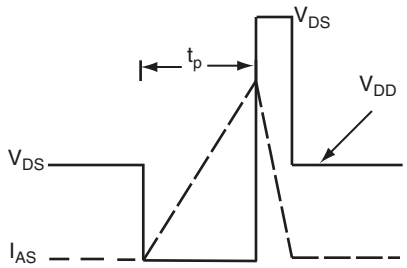

Fig. 14 - Unclamped Inductive Waveforms

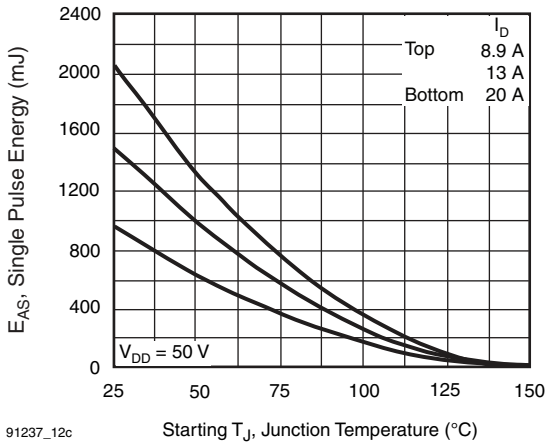

Fig. 15 - Maximum Avalanche Energy vs. Drain Current

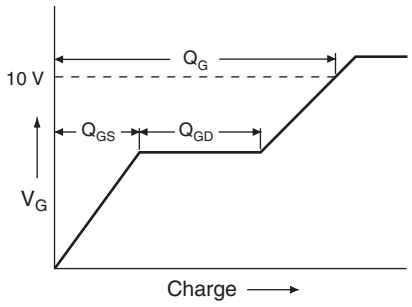

Fig. 16 - Basic Gate Charge Waveform

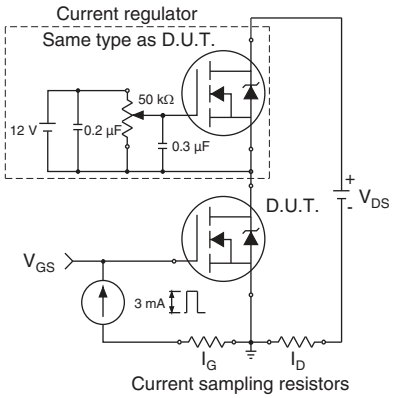

Fig. 17 - Gate Charge Test Circuit

For technical questions, contact: hvmos.techsupport@vishay.com
THIS DOCUMENT IS SUBJECT TO CHANGE WITHOUT NOTICE. THE PRODUCTS DESCRIBED HEREIN AND THIS DOCUMENT ARE SUBJECT TO SPECIFIC DISCLAIMERS, SET FORTH AT www.vishay.com/doc?91000

Peak Diode Recovery dV/dt Test Circuit

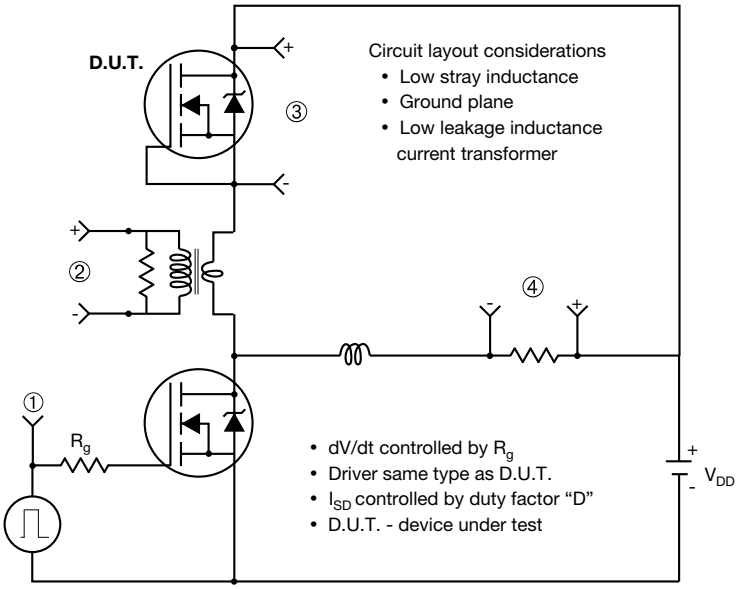

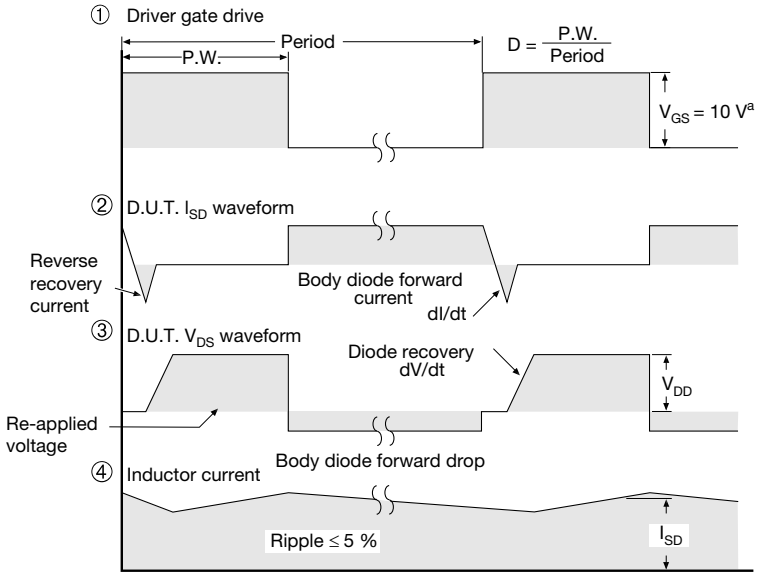

Note

a. V_{GS} = 5 V for logic level devices

Fig. 18 - For N-Channel

Vishay Siliconix maintains worldwide manufacturing capability. Products may be manufactured at one of several qualified locations. Reliability data for Silicon Technology and Package Reliability represent a composite of all qualified locations. For related documents such as package/tape drawings, part marking, and reliability data, see www.vishay.com/ppg?91237.

For technical questions, contact: hvmos.techsupport@vishay.com

THIS DOCUMENT IS SUBJECT TO CHANGE WITHOUT NOTICE. THE PRODUCTS DESCRIBED HEREIN AND THIS DOCUMENT ARE SUBJECT TO SPECIFIC DISCLAIMERS, SET FORTH AT www.vishay.com/doc?91000

TO-247AC (High Voltage)

VERSION 1: FACILITY CODE = 9

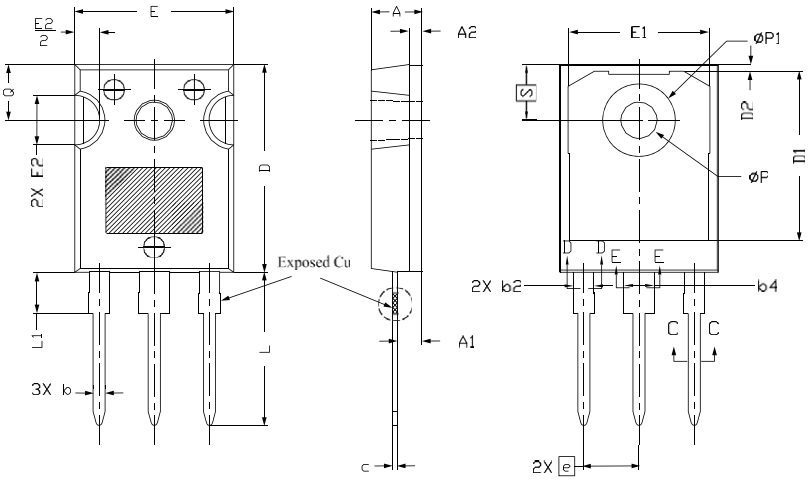

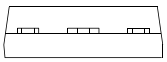

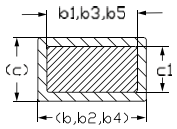

Section C--C,D--D,E--E

	MILLIMETERS			
DIM.	MIN.	NOM.	MAX.	NOTES
A	4.83	5.02	5.21	
A1	2.29	2.41	2.55	
A2	1.17	1.27	1.37	
b	1.12	1.20	1.33	
b1	1.12	1.20	1.28	
b2	1.91	2.00	2.39	6
b3	1.91	2.00	2.34	
b4	2.87	3.00	3.22	6, 8
b5	2.87	3.00	3.18	
c	0.40	0.50	0.60	6
c1	0.40	0.50	0.56	
D	20.40	20.55	20.70	4

	MILLIMETERS			
DIM.	MIN.	NOM.	MAX.	NOTES
D1	16.46	16.76	17.06	5
D2	0.56	0.66	0.76	
E	15.50	15.70	15.87	4
E1	13.46	14.02	14.16	5
E2	4.52	4.91	5.49	3
e	5.46 BSC			
L	14.90	15.15	15.40	
L1	3.96	4.06	4.16	6
Ø P	3.56	3.61	3.65	7
Ø P1	7.19 ref.			
Q	5.31	5.50	5.69	
S	5.51 BSC			

Notes

(1) Package reference: JEDEC® TO247, variation AC
(2) All dimensions are in mm
(3) Slot required, notch may be rounded
(4) Dimension D and E do not include mold flash. Mold flash shall not exceed 0.127 mm per side. These dimensions are measured at the outermost extremes of the plastic body
(5) Thermal pad contour optional with dimensions D1 and E1
(6) Lead finish uncontrolled in L1
(7) Ø P to have a maximum draft angle of 1.5° to the top of the part with a maximum hole diameter of 3.91 mm
(8) Dimension b2 and b4 does not include dambar protrusion. Allowable dambar protrusion shall be 0.1 mm total in excess of b2 and b4 dimension at maximum material condition

For technical questions, contact: hvm@vishay.com

THIS DOCUMENT IS SUBJECT TO CHANGE WITHOUT NOTICE. THE PRODUCTS DESCRIBED HEREIN AND THIS DOCUMENT ARE SUBJECT TO SPECIFIC DISCLAIMERS, SET FORTH AT www.vishay.com/doc?91000

VERSION 2: FACILITY CODE = Y

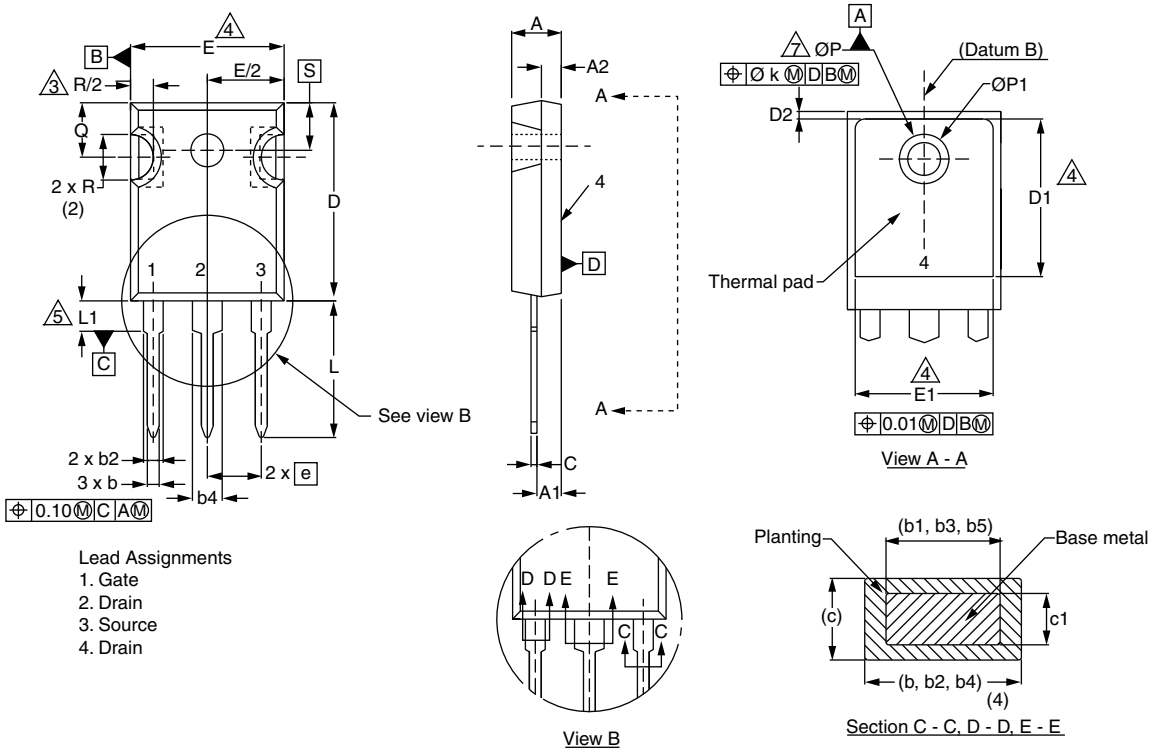

Lead Assignments
1. Gate
2. Drain
3. Source
4. Drain

	MILLIMETERS		
DIM.	MIN.	MAX.	NOTES
A	4.58	5.31	
A1	2.21	2.59	
A2	1.17	2.49	
b	0.99	1.40	
b1	0.99	1.35	
b2	1.53	2.39	
b3	1.65	2.37	
b4	2.42	3.43	
b5	2.59	3.38	
c	0.38	0.86	
c1	0.38	0.76	
D	19.71	20.82	
D1	13.08	-	

	MILLIMETERS		
DIM.	MIN.	MAX.	NOTES
D2	0.51	1.30	
E	15.29	15.87	
E1	13.72	-	
e	5.46 BSC		
Ø k	0.254		
L	14.20	16.25	
L1	3.71	4.29	
Ø P	3.51	3.66	
Ø P1	-	7.39	
Q	5.31	5.69	
R	4.52	5.49	
S	5.51 BSC		

Notes

(1) Dimensioning and tolerancing per ASME Y14.5M-1994
(2) Contour of slot optional
(3) Dimension D and E do not include mold flash. Mold flash shall not exceed 0.127 mm (0.005") per side. These dimensions are measured at the outermost extremes of the plastic body
(4) Thermal pad contour optional with dimensions D1 and E1
(5) Lead finish uncontrolled in L1
(6) Ø P to have a maximum draft angle of 1.5 to the top of the part with a maximum hole diameter of 3.91 mm (0.154")
(7) Outline conforms to JEDEC outline TO-247 with exception of dimension c

For technical questions, contact: hvm@vishay.com

THIS DOCUMENT IS SUBJECT TO CHANGE WITHOUT NOTICE. THE PRODUCTS DESCRIBED HEREIN AND THIS DOCUMENT ARE SUBJECT TO SPECIFIC DISCLAIMERS, SET FORTH AT www.vishay.com/doc?91000

VERSION 3: FACILITY CODE = N

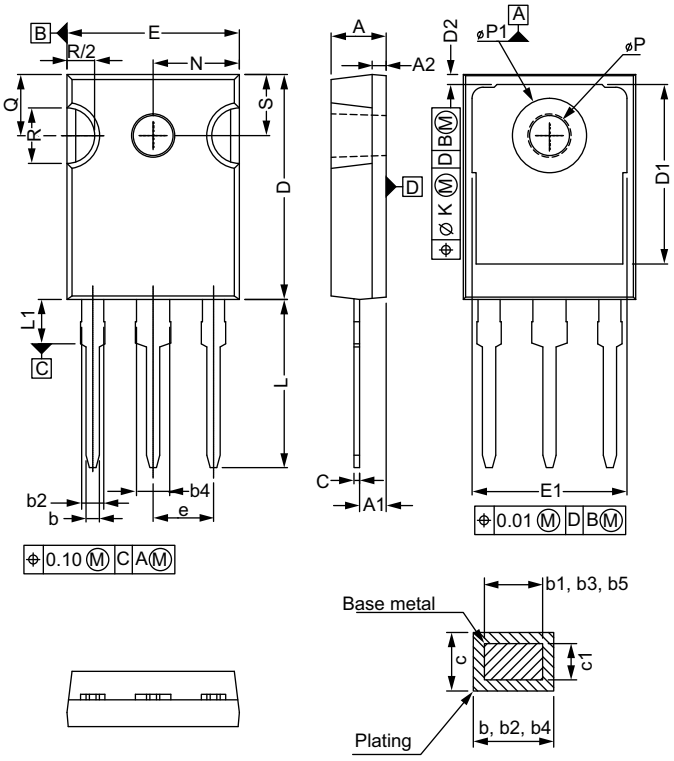

	MILLIMETERS	
DIM.	MIN.	MAX.
A	4.65	5.31
A1	2.21	2.59
A2	1.17	1.37
b	0.99	1.40
b1	0.99	1.35
b2	1.65	2.39
b3	1.65	2.34
b4	2.59	3.43
b5	2.59	3.38
c	0.38	0.89
c1	0.38	0.84
D	19.71	20.70
D1	15.97	-

	MILLIMETERS	
DIM.	MIN.	MAX.
D2	0.51	1.35
E	15.29	15.87
E1	13.46	-
e	5.46 BSC	
k	0.254	
L	14.20	16.10
L1	3.71	4.29
N	7.62 BSC	
P	3.56	3.66
P1	-	7.39
Q	5.31	5.69
R	4.52	5.49
S	5.51 BSC	

ECN: E26-0465-Rev. H, 07-Sep-2026
DWG: 5971

Notes

(1) Dimensioning and tolerancing per ASME Y14.5M-1994
(2) Contour of slot optional
(3) Dimension D and E do not include mold flash. Mold flash shall not exceed 0.127 mm (0.005") per side. These dimensions are measured at the outermost extremes of the plastic body
(4) Thermal pad contour optional with dimensions D1 and E1
(5) Lead finish uncontrolled in L1
(6) Ø P to have a maximum draft angle of 1.5 to the top of the part with a maximum hole diameter of 3.91 mm (0.154")

For technical questions, contact: hvm@vishay.com

THIS DOCUMENT IS SUBJECT TO CHANGE WITHOUT NOTICE. THE PRODUCTS DESCRIBED HEREIN AND THIS DOCUMENT ARE SUBJECT TO SPECIFIC DISCLAIMERS, SET FORTH AT www.vishay.com/doc?91000

Disclaimer

ALL PRODUCT, PRODUCT SPECIFICATIONS AND DATA ARE SUBJECT TO CHANGE WITHOUT NOTICE TO IMPROVE RELIABILITY, FUNCTION OR DESIGN OR OTHERWISE.

Vishay Intertechnology, Inc., its affiliates, agents, and employees, and all persons acting on its or their behalf (collectively, “Vishay”), disclaim any and all liability for any errors, inaccuracies or incompleteness contained in any datasheet or in any other disclosure relating to any product.

Vishay makes no warranty, representation or guarantee regarding the suitability of the products for any particular purpose or the continuing production of any product. To the maximum extent permitted by applicable law, Vishay disclaims (i) any and all liability arising out of the application or use of any product, (ii) any and all liability, including without limitation special, consequential or incidental damages, and (iii) any and all implied warranties, including warranties of fitness for particular purpose, non-infringement and merchantability.

Statements regarding the suitability of products for certain types of applications are based on Vishay's knowledge of typical requirements that are often placed on Vishay products in generic applications. Such statements are not binding statements about the suitability of products for a particular application. It is the customer's responsibility to validate that a particular product with the properties described in the product specification is suitable for use in a particular application. Parameters provided in datasheets and / or specifications may vary in different applications and performance may vary over time. All operating parameters, including typical parameters, must be validated for each customer application by the customer's technical experts. Product specifications do not expand or otherwise modify Vishay's terms and conditions of purchase, including but not limited to the warranty expressed therein.

Hyperlinks included in this datasheet may direct users to third-party websites. These links are provided as a convenience and for informational purposes only. Inclusion of these hyperlinks does not constitute an endorsement or an approval by Vishay of any of the products, services or opinions of the corporation, organization or individual associated with the third-party website. Vishay disclaims any and all liability and bears no responsibility for the accuracy, legality or content of the third-party website or for that of subsequent links.

Vishay products are not designed for use in life-saving or life-sustaining applications or any application in which the failure of the Vishay product could result in personal injury or death unless specifically qualified in writing by Vishay. Customers using or selling Vishay products not expressly indicated for use in such applications do so at their own risk. Please contact authorized Vishay personnel to obtain written terms and conditions regarding products designed for such applications.

No license, express or implied, by estoppel or otherwise, to any intellectual property rights is granted by this document or by any conduct of Vishay. Product names and markings noted herein may be trademarks of their respective owners.

© 2026 VISHAY INTERTECHNOLOGY, INC. ALL RIGHTS RESERVED

THIS DOCUMENT IS SUBJECT TO CHANGE WITHOUT NOTICE. THE PRODUCTS DESCRIBED HEREIN AND THIS DOCUMENT ARE SUBJECT TO SPECIFIC DISCLAIMERS, SET FORTH AT www.vishay.com/doc?91000

ENTEGRECİ

Bu belge www.entegreci.com üzerinden sunulmaktadır.

Elektronik komponent tedarikinde Entegreci

Entegreci, Eskişehir merkezli, Türkiye geneline satış yapan bir elektronik komponent mağazasıdır. Entegreler (IC), mikrodenetleyiciler, transistörler, diyotlar, pasif elemanlar, konnektörler, modüller ve geliştirme kartları tek adetten seri üretim adetlerine kadar satılır. Ürün sayfalarında güncel stok durumunu, fiyatı ve datasheet bağlantısını bulabilirsiniz.

Parça koduyla arama

Üretici parça numarasını yazın; stok ve fiyatı hemen görün.

www.entegreci.com

Ürün kategorileri

Entegreden kapasitöre tüm elektronik komponent kategorileri.

Kategorilere göz atın

Üreticiler

Aradığınız üreticinin ürünlerini tek sayfada inceleyin.

Üreticileri görün

Toplu alım ve teklif

Listede olmayan ya da yüksek adetli parçalar için teklif isteyin.

Teklif isteyin

www.entegreci.com | **destek@entegreci.com** | **0850 305 90 34**

Entegreci is an online electronic components store based in Türkiye. Search by manufacturer part number to see stock, prices and datasheets for integrated circuits, microcontrollers, transistors, passive components and connectors, or request a quote for parts that are not listed.

Bu sayfa Entegreci tarafından eklenmiştir. Belgenin önceki sayfaları asıl yayıncısına aittir ve içeriği değiştirilmemiştir; en güncel sürüm için belgenin yayıncısına başvurun.