# UMW 10N65F

650V N-Channel MOSFET

## 1.Features

- $V_{DS\ (V)}$=650V
- $I_D$=10A
- $R_{DS(ON)}$=0.9Ω

## 2.Pinning information

| Pin | Symbol | Description |
|---|---|---|
| 1 | G | GATE |
| 2 | D | DRAIN |
| 3 | S | SOURCE |

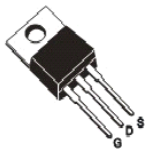

TO-220



TO-220F

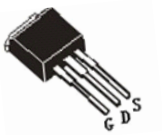

TO-262



TO-263

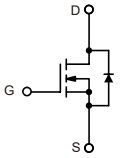

N-Channel

## 3.Absolute Maximum Ratings $T_C$= 25°C

| Parameter | | Symbol | Rating | Units |
|---|---|---|---|---|
| Drain-source Voltage | | $V_{DS}$ | 650 | V |
| gate-source Voltage | | $V_{GS}$ | ±30 | V |
| Continuous Drain Current | $T_C$=25°C | $I_D$ | 10 | A |
| Continuous Drain Current | $T_C$=100°C | $I_D$ | 6 | A |
| Drain Current －Pulsed ① | | $I_{DM}$ | 40 | A |
| Power Dissipation | | $P_D$ | 50 | W |
| Junction Temperature | | $T_J$ | 150 | °C |
| Storage Temperature | | $T_{STG}$ | -55 to 150 | °C |
| Single Pulse Avalanche Energy ② | | $E_{AS}$ | 500 | mJ |

## 4.Thermal resistance rating

| Parameter | Symbol | MAX | | | Units |
|---|---|---|---|---|---|
| | | TO-220 | TO-220F | TO-262/263 | |
| Thermal Resistance Junction-case | $R_{thJC}$ | 0.8 | 2.5 | 1 | °C/W |
| Thermal Resistance Junction-ambient | $R_{thJA}$ | 62.5 | 62.5 | 62.5 | °C/W |

## 5.Electrical Characteristic ($T_C$=25°C unless otherwise noted)

| Parameter | Symbol | Conditions | Min | Typ | Max | Units |
|---|---|---|---|---|---|---|
| Drain-source Breakdown Voltage | $BV_{DSS}$ | $V_{GS}$=0V, $I_D$=250μA | 650 | | | V |
| Breakdown Voltage Temperature Coefficient | $\frac{\Delta BV_{DSS}}{\Delta T_J}$ | $I_D$=250μA Referenced to 25°C | | 0.65 | | V/°C |
| Gate Threshold Voltage | $V_{GS(th)}$ | $V_{DS}$=$V_{GS}$, $I_D$=250μA | 2 | | 4 | V |
| Drain-source Leakage Current | $I_{DSS}$ | $V_{DS}$=650V, $V_{GS}$=0V, $T_J$=25°C | | | 1 | μA |
| | | $V_{DS}$=480V, $V_{GS}$=0V, $T_J$=125°C | | | 10 | μA |
| Forward Transconductance | $g_{fs}$ | $V_{DS}$=40V, $I_D$=5A ③ | | 8 | | S |
| Gate-body Leakage Current ($V_{DS}$=0) | $I_{GSS}$ | $V_{GS}$=±20V | | | ±100 | nA |
| Static Drain-source On Resistance | $R_{DS(ON)}$ | $V_{GS}$=10V, $I_D$=5A ③ | | 0.75 | 0.9 | Ω |
| Input capacitance | $C_{iss}$ | $V_{GS}$=0V, $V_{DS}$=25V, f=1MHz | | 1570 | | pF |
| Turn -Off Delay Time | $t_{D(off)}$ | $V_{DD}$=300V,$I_D$=10A,$R_G$=25Ω ③ | | 130 | | ns |
| Total Gate Charge | $Q_g$ | $I_D$=10A,$V_{DS}$=480V,$V_{GS}$=10V③ | | 45 | | nC |
| Gate-to-Source Charge | $Q_{gs}$ | | | 7.5 | | nC |
| Gate-to-Drain Charge | $Q_{gd}$ | | | 18.5 | | nC |
| Continuous Diode Forward Current | $I_S$ | | | | 10 | A |
| Diode Forward Voltage | $V_{SD}$ | $T_J$=25°C, $I_S$=10A, $V_{GS}$=0V ③ | | | 1.4 | V |
| Reverse Recovery Time | $t_{rr}$ | $T_J$=25°C, $I_F$=10A | | 420 | | ns |
| Reverse Recovery Charge | $Q_{rr}$ | di/dt=100A/μs ③ | | 4.2 | | uC |

Notes:

① Repetitive rating: Pulse width limited by maximum junction temperature.

② Starting $T_J$=25°C, $V_{DD}$ =50V, L=10mH, $R_G$ =25Ω, $I_{AS}$=10A.

③ Pulse Test : Pulse width ≤ 300μs, Duty cycle ≤ 2%.

## 6.1Typical characteristic

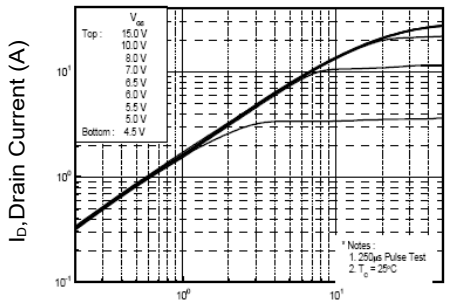


$I_D$,Drain Current (A)

$V_{DS}$,Drain to Source Voltage (V)

Figure 1: Typical Output Characteristics, Tc=25°C

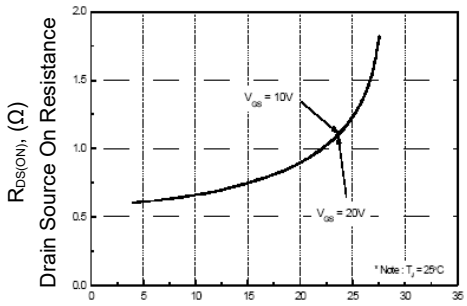


$I_D$,Drain Current (A)

Figure 2: Typical Output Characteristics, Tc=150°C

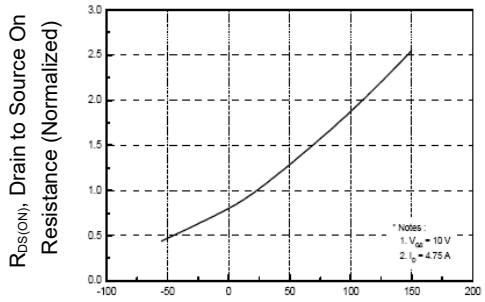


$T_J$,Junction Temperature (°C)

Figure 3: Normalized On-Resistance Vs.Temperature

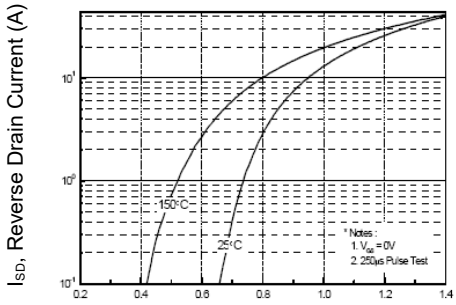


$V_{SD}$,Source to Drain Voltage (V)

Figure 4: Typical Source-Drain Diode Forward Voltage

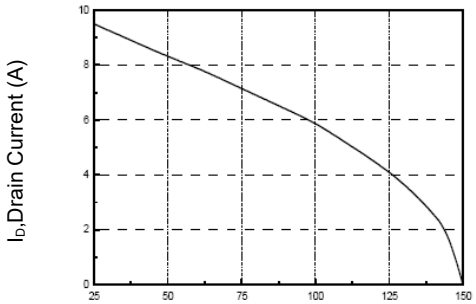


$T_C$,Case Temperature (°C)

Figure 5: Maximum Drain Current Vs.Case Temperature

## 6.2Typical characteristic

10N65(TO-220)

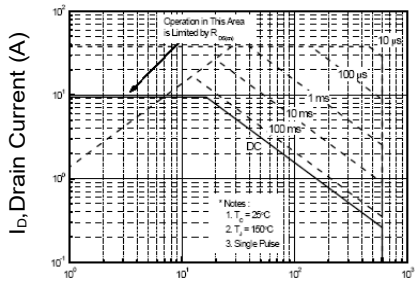


Figure 7: Maximum Safe Operating Area

10N65(TO-220F)

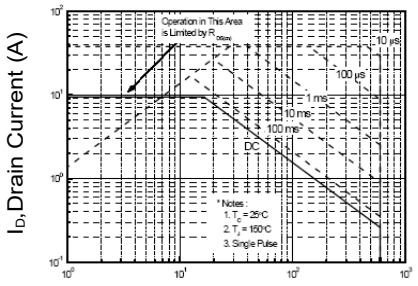


Figure 8: Maximum Safe Operating Area

10N65(TO-262&263)

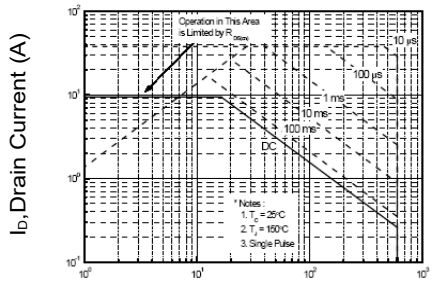


Figure 9: Maximum Safe Operating Area

## 7.1 TO-220 Package Outline Dimensions

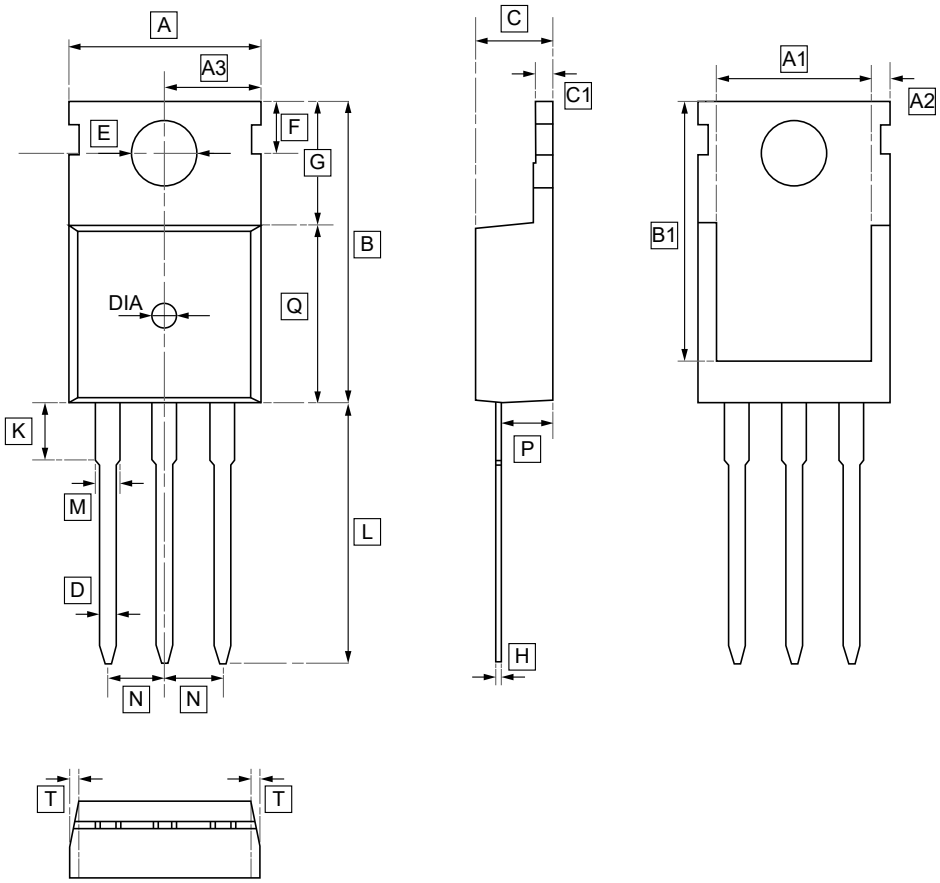


**DIMENSIONS (mm are the original dimensions)**

| Symbol | A | A1 | A2 | A3 | B | B1 | C | C1 | D | E | F | G |
|---|---|---|---|---|---|---|---|---|---|---|---|---|
| Min | 9.7 | 8.44 | 1.05 | 4.8 | 15.4 | 12.9 | 4.28 | 1.1 | 0.6 | 3.4 | 2.65 | 5.2 |
| Max | 10.3 | 8.84 | 1.25 | 5.2 | 16.2 | 13.5 | 4.68 | 1.5 | 1.0 | 3.8 | 3.25 | 5.8 |

| Symbol | H | K | L | L1 | M | N | P | Q | T | DIA |
|---|---|---|---|---|---|---|---|---|---|---|
| Min | 0.4 | 2.9 | 12.8 | 2.7 | 1.15 | 2.49 | 2.1 | 8.7 | W:0.35 | ⊙1.5 |
| Max | 0.6 | 3.3 | 13.6 | 3.3 | 1.35 | 2.59 | 2.7 | 9.3 | | (deep 0.2) |

## 7.2 TO-220F Package Outline Dimensions

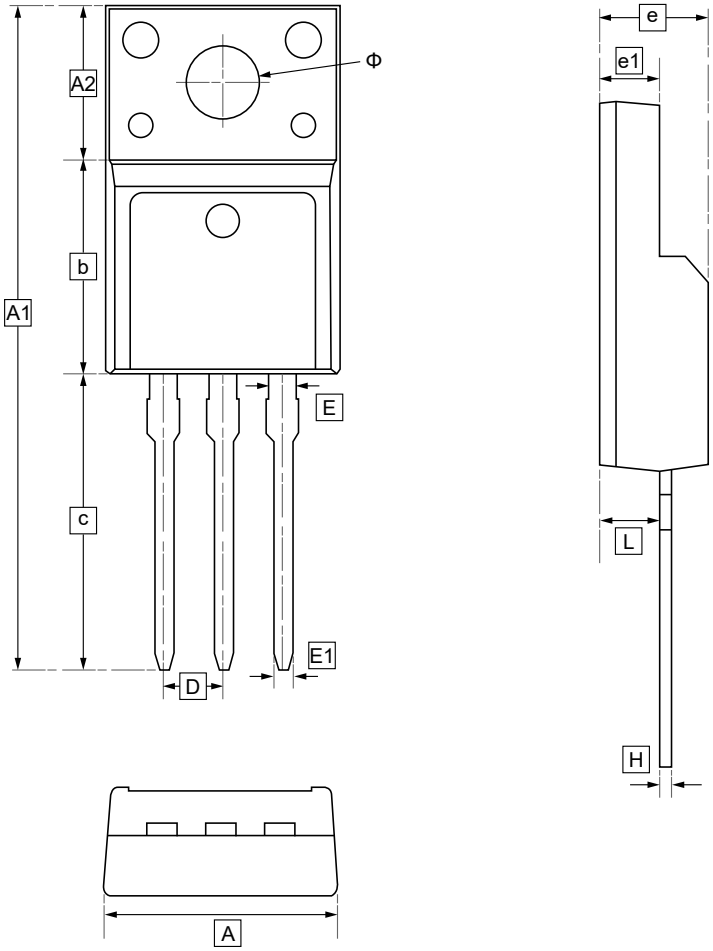


**DIMENSIONS (mm are the original dimensions)**

| Symbol | A | A1 | A2 | b | c | D | E | E1 | Φ | e | e1 | L |
|---|---|---|---|---|---|---|---|---|---|---|---|---|
| **Min** | 10.00 | 28.80 | 6.58 | 9.12 | 12.95 | 2.54 | 1.15 | 0.75 | 3.13 | 4.50 | 2.40 | 2.50 |
| **Max** | 10.20 | 29.20 | 6.78 | 9.32 | 13.25 | | 1.25 | 0.85 | 3.23 | 4.70 | 2.60 | 2.70 |

| Symbol | H |
|---|---|
| **Min** | 0.45 |
| **Max** | 0.55 |

## 7.2 TO-262 Package Outline Dimensions

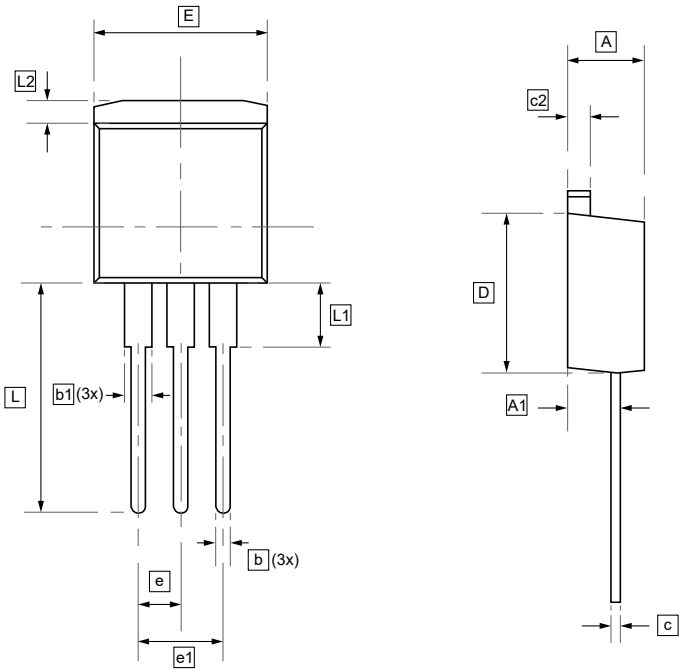


**DIMENSIONS (mm are the original dimensions)**

| Symbol | A | A1 | b | b1 | c | c2 | D | e | e1 | E | L | L1 | L2 |
|---|---|---|---|---|---|---|---|---|---|---|---|---|---|
| Min | 3.80 | 2.00 | 0.60 | 1.20 | 0.40 | 1.10 | - | - | - | 9.90 | 12.50 | 0.80 | - |
| Max | 4.80 | 2.80 | 1.00 | 1.40 | 0.70 | 1.40 | 9.60 | - | 5.30 | 10.70 | 14.50 | 1.20 | 1.50 |

## 7.3 TO-263 Package Outline Dimensions

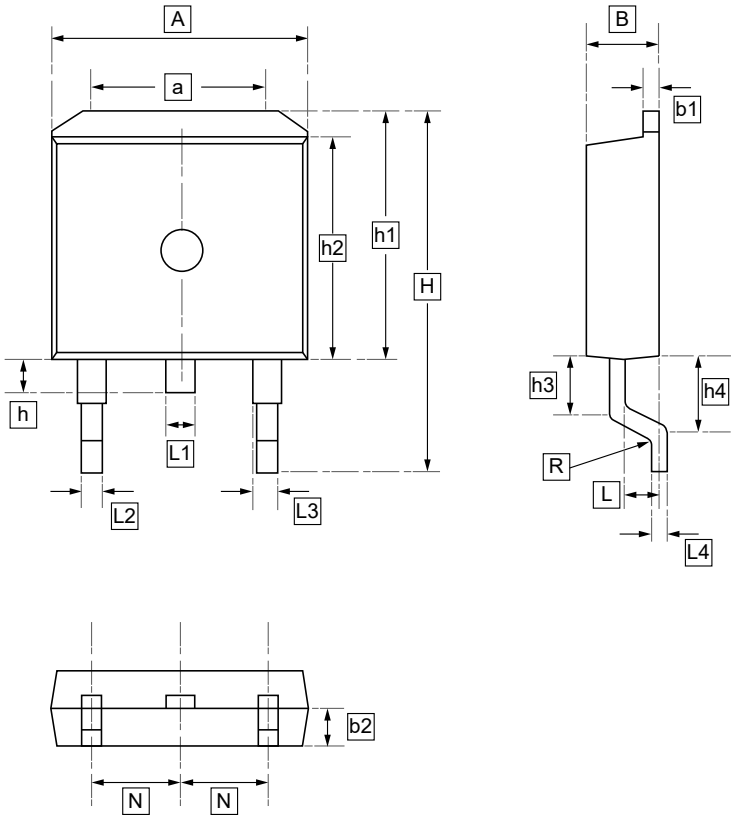


**DIMENSIONS (mm are the original dimensions)**

| Symbol | A | a | B | b1 | b2 | H | h | h1 | h2 | h3 | h4 | L | L1 | L2 | L3 |
|---|---|---|---|---|---|---|---|---|---|---|---|---|---|---|---|
| Min | 9.6 | 7.2 | 4.3 | 1.25 | 2.2 | 15.2 | 1.34 | 10.3 | 9.1 | 1.34 | 2.5 | 2.2 | 1.2 | 0.7 | 1.2 |
| Max | 10.0 | 7.6 | 4.7 | 1.35 | 2.6 | 15.8 | 1.74 | 10.7 | 9.3 | 1.74 | 2.9 | 2.6 | 1.4 | 0.9 | 1.4 |

| Symbol | L4 | N | R |
|---|---|---|---|
| Min | 0.4 | 2.4 | 0.45 |
| Max | 0.6 | 2.5 | 0.55 |

## 8.Ordering information




yy: Year Code
ww: Week Code

| Order Code | Package | Base QTY | Delivery Mode |
|---|---|---|---|
| UMW 10N65F | TO-220F | 1000 | Tube and box |

## 9.Disclaimer

UMW reserves the right to make changes to all products, specifications. Customers should obtain the latest version of product documentation and verify the completeness and currency of the information before placing an order.

When applying our products, please do not exceed the maximum rated values, as this may affect the reliability of the entire system. Under certain conditions, any semiconductor product may experience faults or failures. Buyers are responsible for adhering to safety standards and implementing safety measures during system design, prototyping, and manufacturing when using our products to prevent potential failure risks that could lead to personal injury or property damage.

Unless explicitly stated in writing, UMW products are not intended for use in medical, life-saving, or life-sustaining applications, nor for any other applications where product failure could result in personal injury or death. If customers use or sell the product for such applications without explicit authorization, they assume all associated risks.

When reselling, applying, or exporting, please comply with export control laws and regulations of China, the United States, the United Kingdom, the European Union, and other relevant countries, regions, and international organizations.

This document and any actions by UMW do not grant any intellectual property rights, whether express or implied, by estoppel or otherwise. The product names and marks mentioned herein may be trademarks of their respective owners.

ENTEGRECİ

Bu belge www.entegreci.com üzerinden sunulmaktadır.

# Elektronik komponent tedarikinde Entegreci

Entegreci, Eskişehir merkezli, Türkiye geneline satış yapan bir elektronik komponent mağazasıdır. Entegreler (IC), mikrodenetleyiciler, transistörler, diyotlar, pasif elemanlar, konnektörler, modüller ve geliştirme kartları tek adetten seri üretim adetlerine kadar satılır. Ürün sayfalarında güncel stok durumunu, fiyatı ve datasheet bağlantısını bulabilirsiniz.

### Parça koduyla arama

Üretici parça numarasını yazın; stok ve fiyatı hemen görün.

**www.entegreci.com**

### Ürün kategorileri

Entegreden kapasitöre tüm elektronik komponent kategorileri.

**Kategorilere göz atın**

### Üreticiler

Aradığınız üreticinin ürünlerini tek sayfada inceleyin.

**Üreticileri görün**

### Toplu alım ve teklif

Listede olmayan ya da yüksek adetli parçalar için teklif isteyin.

**Teklif isteyin**

**www.entegreci.com** | **destek@entegreci.com** | **0850 305 90 34**

Entegreci is an online electronic components store based in Türkiye. Search by manufacturer part number to see stock, prices and datasheets for integrated circuits, microcontrollers, transistors, passive components and connectors, or request a quote for parts that are not listed.

Bu sayfa Entegreci tarafından eklenmiştir. Belgenin önceki sayfaları asıl yayıncısına aittir ve içeriği değiştirilmemiştir; en güncel sürüm için belgenin yayıncısına başvurun.