LINEAR SYSTEMS

Improved Standard Products®

SD5000/5001/5400/5401

Quad N-Channel Lateral DMOS Switch, Zener Protected

Product Summary

Part Number	$V_{(BR)DS}$ Min (V)	$V_{GS(th)}$ Max (V)	$r_{DS(on)}$ Max (Ω)	C_{rss} Max (pF)	t_{ON} Max (ns)
SD5000I	20	1.5	70 @ V_{GS} = 5 V	0.5	2
SD5000N	20	1.5	70 @ V_{GS} = 5 V	0.5	2
SD5001N	10	1.5	70 @ V_{GS} = 5 V	0.5	2
SD5400CY	20	1.5	75 @ V_{GS} = 5 V	0.5	2
SD5401CY	10	1.5	75 @ V_{GS} = 5 V	0.5	2

Features

- Quad SPST Switch with Zener Input Protection
- Low Interelectrode Capacitance and Leakage
- Ultra-High Speed Switching—t_{ON}: 1 ns
- Ultra-Low Reverse Capacitance: 0.2 pF
- Low Guaranteed r_{DS} @5 V
- Low Turn-On Threshold Voltage

Benefits

- High-Speed System Performance
- Low Insertion Loss at High Frequencies
- Low Transfer Signal Loss
- Simple Driver Requirement
- Single Supply Operation

Applications

- Fast Analog Switch
- Fast Sample-and-Holds
- Pixel-Rate Switching
- Video Switch
- Multiplexer
- DAC Deglitchers
- High-Speed Driver

Description

The SD5000/5400 series of monolithic switches features four individual double-diffused enhancement-mode MOSFETs built on a common substrate. These bidirectional devices provide low on-resistance and low interelectrode capacitances to minimize insertion loss and crosstalk.

Built on Siliconix' proprietary DMOS process, the SD5000/5400 series utilizes lateral construction to achieve low capacitance and ultra-fast switching speeds. For manufacturing reliability, these devices feature poly-silicon gates protected by Zener diodes

The SD 5000/5400 are rated to handle ±10-V analog signals, while the SD5001/5401 are rated for ±5-V signals.

For similar products packaged in TO-206AF (TO-72) and TO-253 (SOT-143) see the SD211DE/SST211 series.

Dual-In-Line

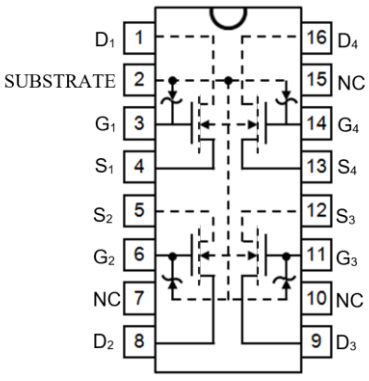

Top View

Plastic: SD5000N
SD5001N
Sidebraze: SD5000I

Narrow Body SOIC

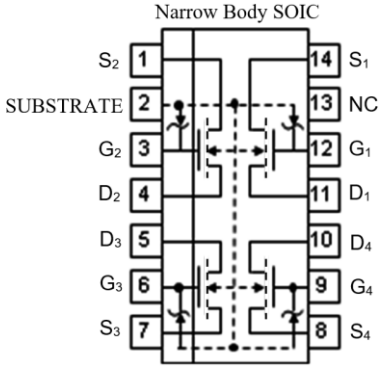

Top View

SD5400CY
SD5401CY

Absolute Maximum Ratings (T_A = 25ºC Unless Otherwise Noted)

Gate-Drain, Gate-Source Voltage
(SD5000, SD5400).....+30V/-25V
(SD5001, SD5401).....+25V/-15V
Gate-Substrate Voltage (SD5000, SD5400).....+30V/-0.3V
(SD5001I, SD5401).....+25V/-0.3V
Drain-Source Voltage (SD5000, SD5400).....20V
(SD5001I, SD5401).....10V
Drain-Source-Substrate Voltage (SD5000, SD5400).....25V
(SD5001I, SD5401).....15V

Drain Current.....50 mA
Lead Temperature (1/16" from case for 10 seconds).....300ºC
Storage Temperature.....-65 to 150ºC
Operating Junction Temperature.....-55 to 150ºC
Power Dissipation": (Package).....500 mW
(each Device).....300 mW

Notes:
a. SD5000/SD5001I derate 5 mW/C above 25ºC
b. SD5400/SD5401 derate 4 mW/C above 25ºC

Specifications[a]

Parameter	Symbol[b]	Test Conditions[b]		Typ[c]	Limits SD5000 SD5400 Min	Limits SD5000 SD5400 Max	Limits SD5001 SD5401 Min	Limits SD5001 SD5401 Max	Unit
Static									
Drain-Source Breakdown Voltage	$V_{(BR)DS}$	V_{GS}=V_{BS}=-5V, I_D=10nA		30	20		10		V
Source-Drain Breakdown Voltage	$V_{(BR)SD}$	V_{GD}=V_{BD}=-5V, I_S=10nA		22	20		10		V
Drain-Substrate Breakdown Voltage	$V_{(BR)DBO}$	V_{GB}=0 V, I_D=10µA, Source Open		35	25		15		V
Source-Substrate Breakdown Voltage	$V_{(BR)SBO}$	V_{GB}=0 V, I_S=10µA, Drain Open		35	25		15		V
Drain-Source Leakage	$I_{DS(off)}$	V_{GS}= V_{BS}=-5 V	V_{DS}= 10 V	0.4				10	nA
			V_{DS}= 15 V	0.7					nA
			V_{DS}= 20 V	0.9		10			nA
Source-Drain Leakage	$I_{SD(off)}$	V_{GD}= V_{BD}=-5 V	V_{SD}= 10 V	0.5				10	nA
			V_{SD}= 15 V	0.8					nA
			V_{SD}= 20 V	1		10			nA
Gate Leakage	I_{GBS}	V_{DB} = V_{SB} = 0 V, V_{GB} =30V		0.01		100		100	nA
Threshold Voltage	$V_{GS(th)}$	V_{DS} = V_{GS}, I_D = I µA, V_{SB} =0V		0.8		1.5		1.5	V
Drain-Source On-Resistance	$r_{DS(on)}$	V_{SB} = 0 V I_D = 1 mA	SD5000 Series V_{GS} = 5 V	58		70		70	Ω
			SD5400 Series V_{GS} = 5 V	60		75		75	Ω
			V_{GS} = 10 V	38					Ω
			V_{GS} = 15 V	30					Ω
			V_{GS} = 20 V	26					Ω
Resistance Match	$\Delta r_{DS(on)}$		V_{GS} = 5 V	1		5		5	Ω
Dynamic									
Forward Transconductance	g_{fs}	V_{DS} = 10 V V_{SB} = 0 V I_D = 20 mA f = 1 kHz	SD5000 Series	12	10		10		mS
			SD5400 Series	11	9		9		mS
Gate Node Capacitance	$C_{(GS+GD+GB)}$	V_{DS} = 10 V f = 1 MHz V_{GS} = V_{BS} = -15V	SD5000 Series	2.5		3.5		3.5	pF
Drain Node Capacitance	$C_{(GD+DB)}$			2.0		3		3	pF
Source Node Capacitance	$C_{(GS+SB)}$			3.7		5		5	pF
Reverse Transfer Capacitance	C_{rss}			0.2		0.5		0.5	pF
Crosstalk		f = 3 kHz		-107					dB

Specifications[a]

Parameter	Symbol[b]	Test Conditions[b]	Typ[c]	Limits SD5000 SD5400 Min	Limits SD5000 SD5400 Max	Limits SD5001 SD5401 Min	Limits SD5001 SD5401 Max	Unit
Switching								
Turn-On Time	$t_{d(on)}$	V_{SB}= 1-5 Vin, V_{GN} 0 to 5 V, R_G = 25 Ω V_{DD} = 5 V, R_L = 680 Ω	0.5		1		1	ns
	t_r		0.6		1		1	
Turn-Off Time	$t_{d(off)}$		2					
	t_f		6					

DMCA

Switching Time Test Circuit

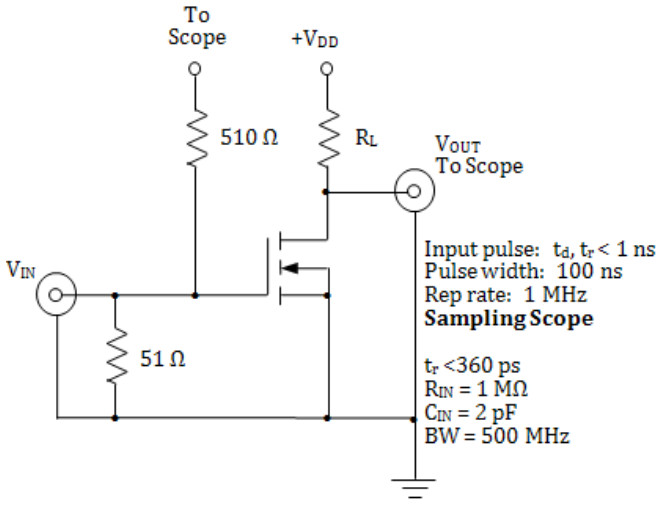

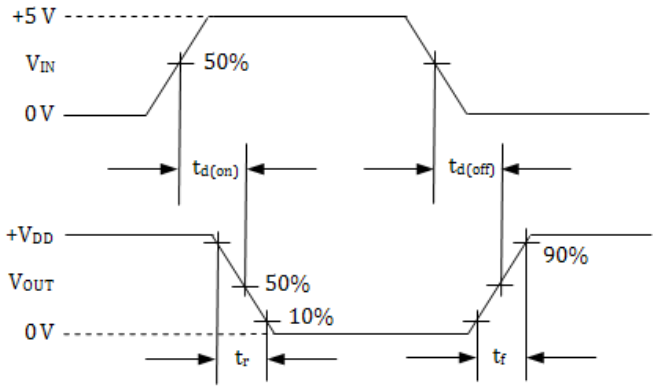

VIN	Switch (On/Off)	VOUT
High	On	GND
Low	Off	VDD

Notes:

a. T_A = 25ºC unless otherwise noted.
b. B is the body (substrate) and $V_{(BR)}$ is breakdown.
c. Typical values are for DESIGN AID ONLY, not guaranteed nor subject to production testing.
d. Information furnished by Linear Integrated Systems is believed to be accurate and reliable. However, no responsibility is assumed for its use; nor for any infringement of patents or other rights of third parties which may result from its use. No license is granted by implication or otherwise under any patent or patent rights of Linear Integrated Systems.

Package Dimensions:

SOIC 14 Lead Narrow Body Plastic Package

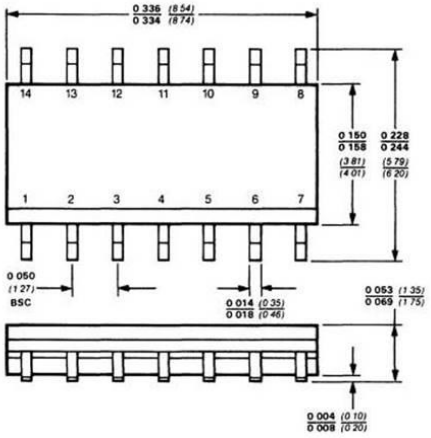

S/B (Side Braze) DIP 16 Lead Dual In Line Package

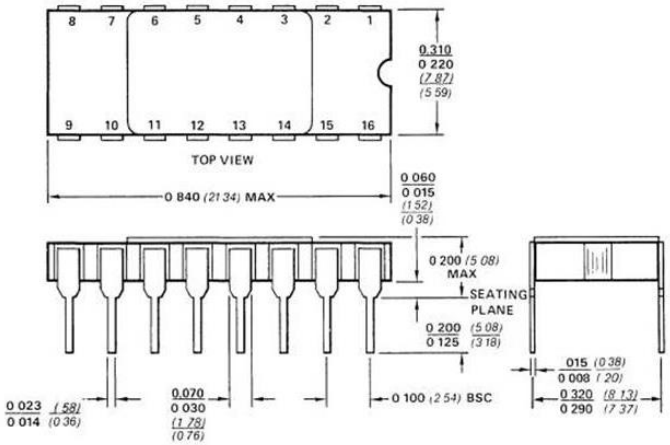

Ordering Information:

Standard Part Call-Out
SD5000N PDIP 16L RoHS
SD5001N PDIP 16L RoHS
SD5000I S/B DIP 16L RoHS
SD5400CY SOIC 14L RoHS
SD5401CY SOIC 14L RoHS
Custom Part Call-Out (Custom Parts Include SEL + 4 Digit Numeric Code)
SD5000N PDIP 16L RoHS SELXXXX
SD5001N PDIP 16L RoHS SELXXXX
SD5000I S/B DIP 16L RoHS SELXXXX
SD5400CY SOIC 14L RoHS SELXXXX
SD5401CY SOIC 14L RoHS SELXXXX

PDIP 16 Lead Dual In Line Plastic Package

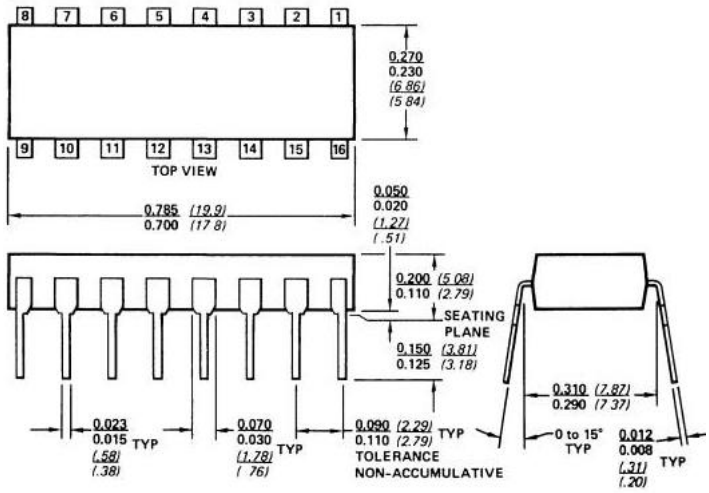

ENTEGRECİ

Bu belge www.entegreci.com üzerinden sunulmaktadır.

Elektronik komponent tedarikinde Entegreci

Entegreci, Eskişehir merkezli, Türkiye geneline satış yapan bir elektronik komponent mağazasıdır. Entegreler (IC), mikrodenetleyiciler, transistörler, diyotlar, pasif elemanlar, konnektörler, modüller ve geliştirme kartları tek adetten seri üretim adetlerine kadar satılır. Ürün sayfalarında güncel stok durumunu, fiyatı ve datasheet bağlantısını bulabilirsiniz.

Parça koduyla arama

Üretici parça numarasını yazın; stok ve fiyatı hemen görün.

www.entegreci.com

Ürün kategorileri

Entegreden kapasitöre tüm elektronik komponent kategorileri.

Kategorilere göz atın

Üreticiler

Aradığınız üreticinin ürünlerini tek sayfada inceleyin.

Üreticileri görün

Toplu alım ve teklif

Listede olmayan ya da yüksek adetli parçalar için teklif isteyin.

Teklif isteyin

www.entegreci.com | **destek@entegreci.com** | **0850 305 90 34**

Entegreci is an online electronic components store based in Türkiye. Search by manufacturer part number to see stock, prices and datasheets for integrated circuits, microcontrollers, transistors, passive components and connectors, or request a quote for parts that are not listed.

Bu sayfa Entegreci tarafından eklenmiştir. Belgenin önceki sayfaları asıl yayıncısına aittir ve içeriği değiştirilmemiştir; en güncel sürüm için belgenin yayıncısına başvurun.