LINEAR SYSTEMS

Over 30 Years of Quality Through Innovation

3N163 and 3N164

P-Channel Enhancement Mode MOSFET

VERY HIGH INPUT IMPEDANCE, HIGH GATE BREAKDOWN, FAST SWITCHING, LOW CAPACITANCE

FEATURES	
VERY HIGH INPUT IMPEDANCE	
HIGH GATE BREAKDOWN	
ULTRA LOW LEAKAGE	
FAST SWITCHING	
LOW CAPACITANCE	
ABSOLUTE MAXIMUM RATINGS	
@ 25°C (unless otherwise stated)	
Drain-Source or Drain-Gate Voltage	
3N163	-40V
3N164	-30V
Drain Current	50mA
Storage Temperature	-55ºC to +150ºC
Power Dissipation TO-72 case	375mW[2]
Power Dissipation SOT-143 case	350mW[3]

TO-72 4L TOP VIEW

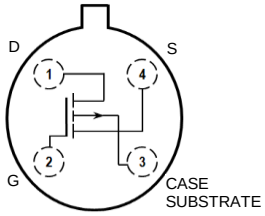

SOT-143 4L TOP VIEW

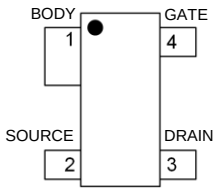

TO-72 4L PACKAGE PHOTO



SOT-143 4L TOP VIEW



ELECTRICAL CHARACTERISTICS @ 25°C (unless otherwise noted)

SYMBOL	CHARACTERISTIC	3N163		3N164		UNITS	CONDITIONS
		MIN	MAX	MIN	MAX		
I_{GSS}	Gate Leakage Current		-10		-10	pA	V_{GS}=-40V, V_{DS}=0 (3N163), V_{SB}=0V
	T_A=+125ºC		-25		-25		V_{GS}=-30V, V_{DS}=0 (3N164), V_{SB}=0V
BV_{DSS}	Drain-Source Breakdown Voltage	-40		-30			I_D=-10µA V_{GS}=0, V_{BS}=0
BV_{SDS}	Source-Drain Breakdown Voltage	-40		-30		V	I_S=-10µA V_{GD}=0, V_{BD}=0
$V_{GS(th)}$	Threshold Voltage	-2.0	-5.0	-2.0	-5.0		V_{DS}=V_{GS} I_D=-10µA, V_{SB}=0V
V_{GS}	Gate Source Voltage (on)	-3.0	-6.5	-3.0	-6.5		V_{DS}=-15V I_D=-0.5mA, V_{SB}=0V
I_{DSS}	Zero Gate Voltage, Drain Current (off)		-200		-400	pA	V_{DS}=-15V V_{GS}=0, V_{SB}=0V
I_{SDS}	Zero Gate Voltage, Source Current		-400		-800		V_{SD}=-15V V_{GS}=0, V_{DB}=0V
$R_{DS(on)}$	Drain-Source on Resistance		250		300	ohms	V_{GS}=-20V I_D=-100µA, V_{SB}=0V
$I_{D(on)}$	On Drain Current	-5.0	-30	-3.0	-30	mA	V_{DS}=-15V V_{GS}=-10V, V_{SB}=0V
g_{fs}	Forward Transconductance	2.0	4.0	1.0	4.0	mS	V_{DS}=-15V I_D=-10mA f=1kHz
g_{og}	Output Admittance		250		250	µS	
C_{iss}	Input Capacitance-Output Shorted		3.5		3.5	pF	V_{DS}=-15V I_D=-10mA [1] f=1MHz
C_{rss}	Reverse Transfer Capacitance		0.7		0.7		
C_{oss}	Output Capacitance Input Shorted		3.0		3.0		

SWITCHING CHARACTERISTICS T_A=25°C and V_{BS}=0 (unless otherwise noted)

SYMBOL	CHARACTERISTIC	3N163		3N164		UNITS	CONDITIONS
		MIN	MAX	MIN	MAX		
t_{on}	Turn-On Delay Time		12		12	ns	V_{DD}=-15V, V_{SB}=0V $I_{D(on)}$=-10mA[1] R_G=R_L=1.4K
t_r	Rise Time		24		24		
t_{off}	Turn-Off Time		50		50		

Switching Times Test Circuit

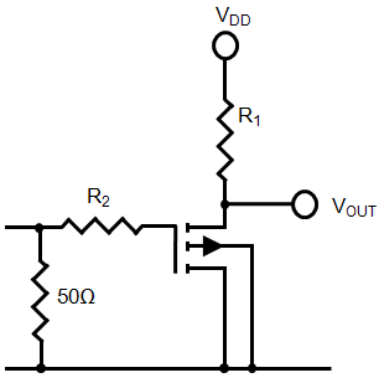

TYPICAL SWITCHING WAVEFORM

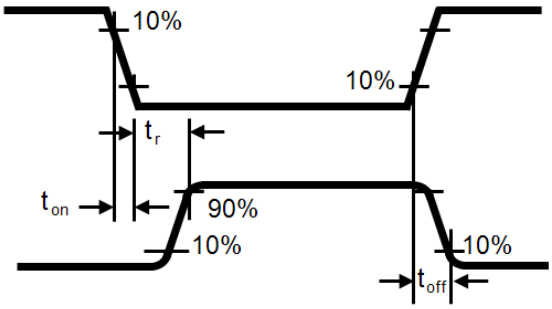

INPUT PULSE
Rise Time≤2ns
Pulse Width≥200ns

SAMPLING SCOPE
T_r≤0.2ns
C_{IN}≤2pF
R_{IN}≥10M

Simplest Possible Smoke Detector

KRL 09/26/2021

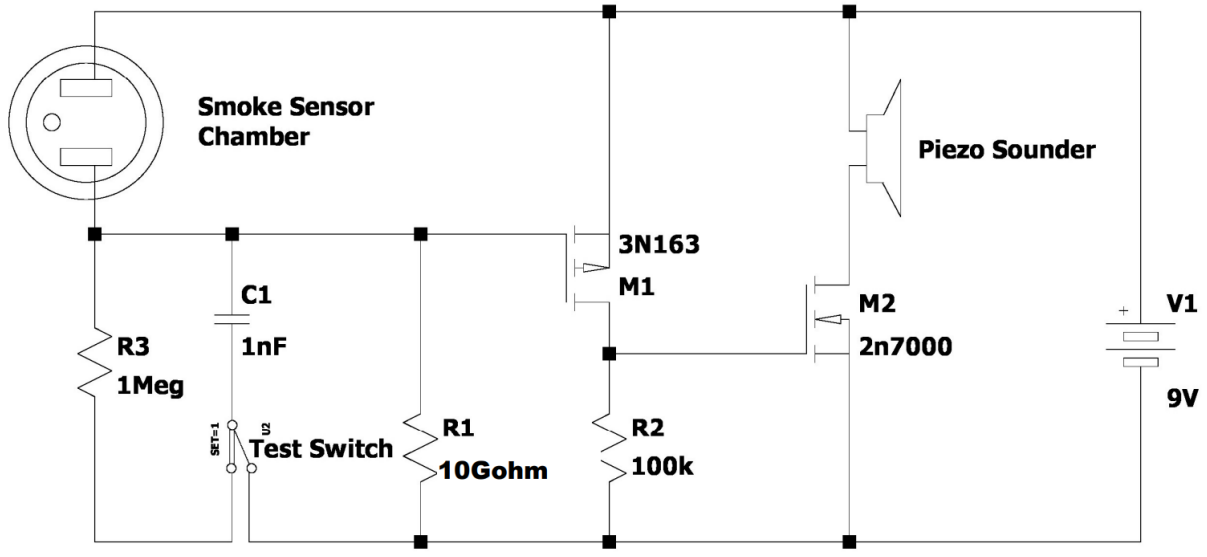

NOTES:

1. For design reference only, not 100% tested.
2. Derate 3mW/ºC above 25ºC
3. Derate 3.5mW/ºC above 25ºC
4. All min/max limits are absolute numbers. Negative signs indicate electrical polarity only.

Stresses above those listed under “Absolute Maximum Ratings” may cause permanent damage to the device. These are stress ratings only and functional operation of the device at these or any other conditions above those indicated in the operational sections of the specifications is not implied. Exposure to absolute maximum rating conditions for extended periods may affect device reliability.

Information furnished by Linear Integrated Systems is believed to be accurate and reliable. However, no responsibility is assumed for its use; nor for any infringement of patents or other rights of third parties which may result from its use. No license is granted by implication or otherwise under any patent or patent rights of Linear Integrated Systems.

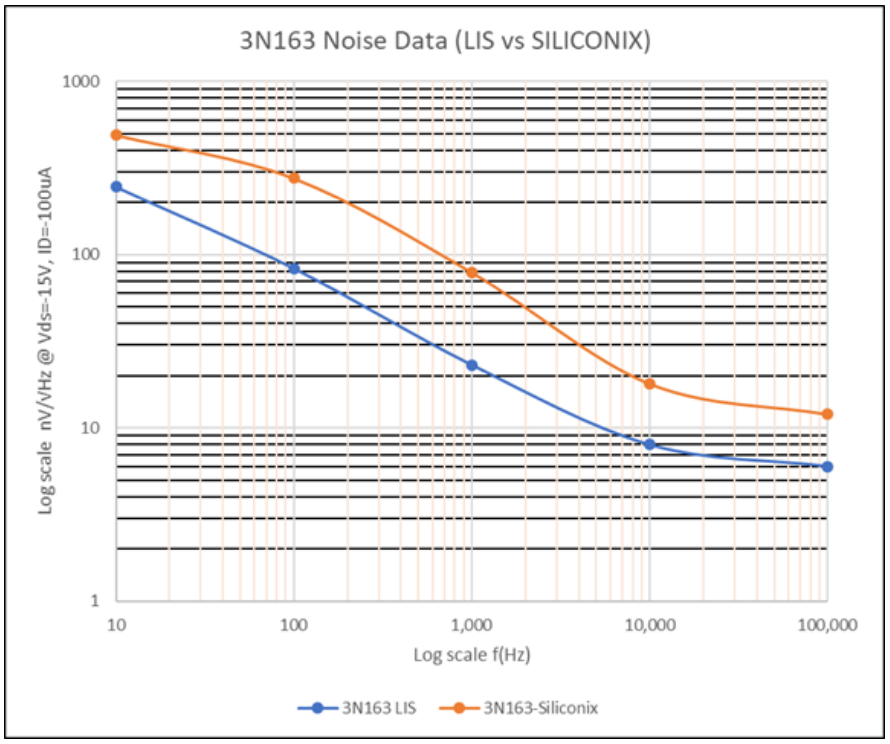

ENTEGRECİ

Bu belge www.entegreci.com üzerinden sunulmaktadır.

Elektronik komponent tedarikinde Entegreci

Entegreci, Eskişehir merkezli, Türkiye geneline satış yapan bir elektronik komponent mağazasıdır. Entegreler (IC), mikrodenetleyiciler, transistörler, diyotlar, pasif elemanlar, konnektörler, modüller ve geliştirme kartları tek adetten seri üretim adetlerine kadar satılır. Ürün sayfalarında güncel stok durumunu, fiyatı ve datasheet bağlantısını bulabilirsiniz.

Parça koduyla arama

Üretici parça numarasını yazın; stok ve fiyatı hemen görün.

www.entegreci.com

Ürün kategorileri

Entegreden kapasitöre tüm elektronik komponent kategorileri.

Kategorilere göz atın

Üreticiler

Aradığınız üreticinin ürünlerini tek sayfada inceleyin.

Üreticileri görün

Toplu alım ve teklif

Listede olmayan ya da yüksek adetli parçalar için teklif isteyin.

Teklif isteyin

www.entegreci.com | **destek@entegreci.com** | **0850 305 90 34**

Entegreci is an online electronic components store based in Türkiye. Search by manufacturer part number to see stock, prices and datasheets for integrated circuits, microcontrollers, transistors, passive components and connectors, or request a quote for parts that are not listed.

Bu sayfa Entegreci tarafından eklenmiştir. Belgenin önceki sayfaları asıl yayıncısına aittir ve içeriği değiştirilmemiştir; en güncel sürüm için belgenin yayıncısına başvurun.