# 7.0A, 800V N-CHANNEL POWER MOSFET

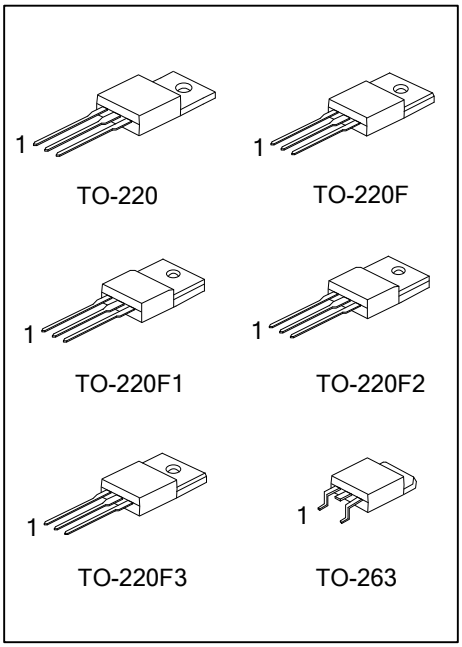


## ■ DESCRIPTION

The UTC **7N80** is a N-channel mode power MOSFET using UTC's advanced technology to provide customers with planar stripe and DMOS technology. This technology specializes in allowing a minimum on-state resistance and superior switching performance. It also can withstand high energy pulse in the avalanche and commutation mode.

The UTC **7N80** is universally applied in high efficiency switch mode power supply.

## ■ FEATURES

* $R_{DS(on)}$<1.5Ω @ $V_{GS}$=10V, $I_D$=3.3A
* High switching speedY
* 100% avalanche tested

## ■ SYMBOL

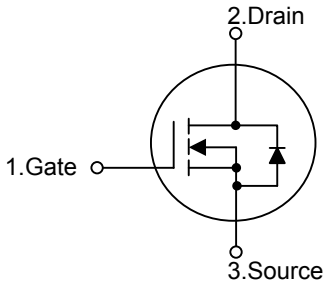


## ■ ORDERING INFORMATION

| Ordering Number | | Package | Pin Assignment | | | Packing |
|---|---|---|---|---|---|---|
| Lead Free | Halogen Free | | 1 | 2 | 3 | |
| 7N80L-TA3-T | 7N80G-TA3-T | TO-220 | G | D | S | Tube |
| 7N80L-TF3-T | 7N80G-TF3-T | TO-220F | G | D | S | Tube |
| 7N80L-TF1-T | 7N80G-TF1-T | TO-220F1 | G | D | S | Tube |
| 7N80L-TF2-T | 7N80G-TF2-T | TO-220F2 | G | D | S | Tube |
| 7N80L-TF3T-T | 7N80G-TF3T-T | TO-220F3 | G | D | S | Tube |
| 7N80L-TQ2-T | 7N80G-TQ2-T | TO-263 | G | D | S | Tube |
| 7N80L-TQ2-R | 7N80G-TQ2-R | TO-263 | G | D | S | Tape Reel |

Note: Pin Assignment: G: Gate D: Drain S: Source

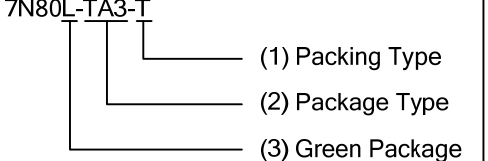


(1) T: Tube, R: Tape Reel
(2) TA3: TO-220, TF1: TO-220F1, TF2: TO-220F2
TF3: TO-220F, TF3T: TO-220F3, TQ2: TO-263
(3) L: Lead Free, G: Halogen Free and Lead Free


Copyright © 2016 Unisonic Technologies Co., Ltd

## ■ MARKING

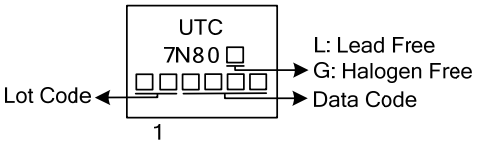

## ■ ABSOLUTE MAXIMUM RATINGS ($T_C$=25°C, unless otherwise specified)

| PARAMETER | | SYMBOL | RATINGS | UNIT |
|---|---|---|---|---|
| Drain-Source Voltage | | $V_{DSS}$ | 800 | V |
| Gate-Source Voltage | | $V_{GSS}$ | ±30 | V |
| Drain Current | Continuous | $I_D$ | 7.0 | A |
| | Pulsed (Note 2) | $I_{DM}$ | 26.4 | A |
| Avalanche Energy | Single Pulsed (Note 3) | $E_{AS}$ | 670 | mJ |
| | Repetitive (Note 2) | $E_{AR}$ | 16.7 | mJ |
| Peak Diode Recovery dv/dt (Note 4) | | dv/dt | 4.5 | V/ns |
| Power Dissipation | TO-220 /TO-263 | $P_D$ | 142 | W |
| | TO-220F/ TO-220F1 TO-220F3 | | 52 | |
| | TO-220F2 | | 54 | |
| Junction Temperature | | $T_J$ | +150 | °C |
| Storage Temperature | | $T_{STG}$ | -55 ~ +150 | °C |

Notes: 1. Absolute maximum ratings are those values beyond which the device could be permanently damaged. Absolute maximum ratings are stress ratings only and functional device operation is not implied.
2. Repetitive Rating: Pulse width limited by maximum junction temperature.
3. L=27.5mH, $I_{AS}$=7A, $V_{DD}$= 50V, $R_G$=25Ω, Starting $T_J$=25°C
4. $I_{SD}$ ≤8A, di/dt ≤200A/μs, $V_{DD}$ ≤$BV_{DSS}$, Starting $T_J$=25°C

## ■ THERMAL DATA

| PARAMETER | | SYMBOL | RATINGS | UNIT |
|---|---|---|---|---|
| Junction to Ambient | | $\theta_{JA}$ | 62.5 | °C/W |
| Junction to Case | TO-220 /TO-263 | $\theta_{JC}$ | 0.88 | °C/W |
| | TO-220F/ TO-220F1 TO-220F3 | | 2.4 | |
| | TO-220F2 | | 2.31 | |

## ■ ELECTRICAL CHARACTERISTICS ($T_C$=25°C, unless otherwise specified)

| PARAMETER | | SYMBOL | TEST CONDITIONS | MIN | TYP | MAX | UNIT |
|---|---|---|---|---|---|---|---|
| **OFF CHARACTERISTICS** | | | | | | | |
| Drain-Source Breakdown Voltage | | $BV_{DSS}$ | $V_{GS}$=0V, $I_D$=250μA | 800 | | | V |
| Drain-Source Leakage Current | | $I_{DSS}$ | $V_{DS}$=800V, $V_{GS}$=0V | | | 10 | μA |
| Gate-Source Leakage Current | Forward | $I_{GSS}$ | $V_{DS}$=0V ,$V_{GS}$=30V | | | 100 | nA |
| | Reverse | | $V_{DS}$=0V ,$V_{GS}$=-30V | | | -100 | nA |
| **ON CHARACTERISTICS** | | | | | | | |
| Gate Threshold Voltage | | $V_{GS(TH)}$ | $V_{DS}$=$V_{GS}$, $I_D$=250μA | 3.0 | | 5.0 | V |
| Drain-Source On-State Resistance | | $R_{DS(ON)}$ | $V_{GS}$=10V, $I_D$=3.3A | | | 1.5 | Ω |
| **DYNAMIC PARAMETERS** | | | | | | | |
| Input Capacitance | | $C_{ISS}$ | $V_{DS}$=25V,$V_{GS}$=0V,f=1.0MHz | | 1200 | | pF |
| Output Capacitance | | $C_{OSS}$ | | | 120 | | pF |
| Reverse Transfer Capacitance | | $C_{RSS}$ | | | 17 | | pF |
| **SWITCHING PARAMETERS** | | | | | | | |
| Total Gate Charge | | $Q_G$ | $V_{DS}$=120V, $V_{GS}$=10V, $I_D$=6.6A $I_G$=3.3mA (Note 1,2) | | 155 | | nC |
| Gate-Source Charge | | $Q_{GS}$ | | | 11 | | nC |
| Gate-Drain Charge | | $Q_{GD}$ | | | 23 | | nC |
| Turn-ON Delay Time | | $t_{D(ON)}$ | $V_{DD}$=400V, $I_D$=6.6A, $R_G$=25Ω (Note 1,2) | | 65 | | ns |
| Turn-ON Rise Time | | $t_R$ | | | 100 | | ns |
| Turn-OFF Delay Time | | $t_{D(OFF)}$ | | | 300 | | ns |
| Turn-OFF Fall Time | | $t_F$ | | | 125 | | ns |
| **SOURCE- DRAIN DIODE RATINGS AND CHARACTERISTICS** | | | | | | | |
| Maximum Body-Diode Continuous Current | | $I_S$ | | | | 6.6 | A |
| Maximum Body-Diode Pulsed Current | | $I_{SM}$ | | | | 26.4 | A |
| Drain-Source Diode Forward Voltage | | $V_{SD}$ | $I_S$ =6.6A, $V_{GS}$=0V | | | 1.4 | V |
| Body Diode Reverse Recovery Time | | $t_{rr}$ | $V_{GS}$=0V, $I_S$=6.6A, $dI_F/dt$=100A/μs (Note 1) | | 650 | | ns |
| Body Diode Reverse Recovery Charge | | $Q_{rr}$ | | | 7.0 | | μC |

Notes: 1. Pulse Test: Pulse width ≤ 300μs, Duty cycle ≤ 2%.
2. Essentially independent of operating temperature.

## ■ TEST CIRCUITS AND WAVEFORMS

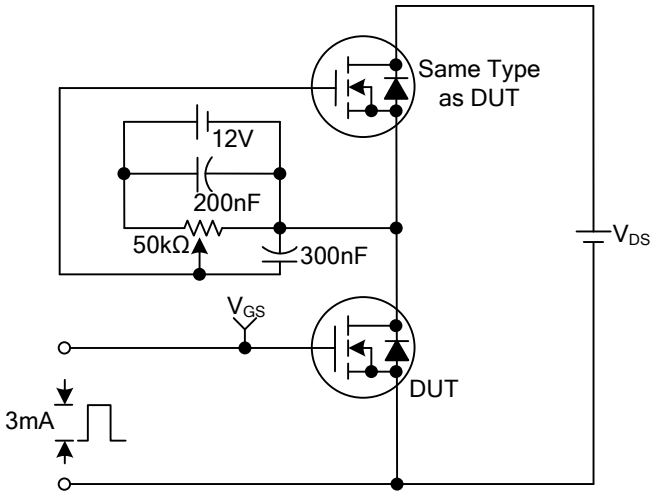


**Gate Charge Test Circuit**

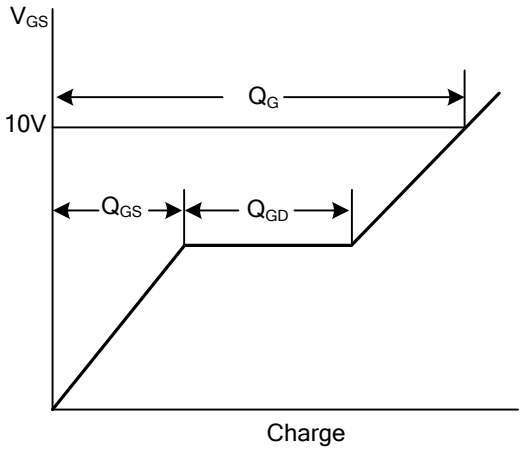


**Gate Charge Waveforms**

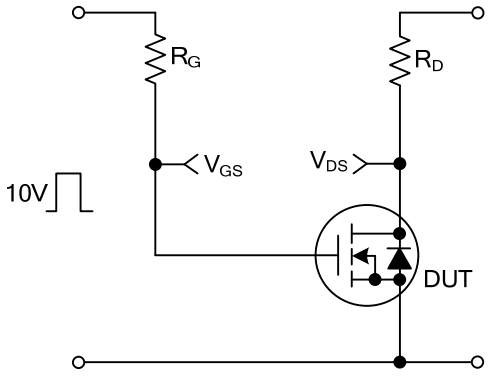


**Resistive Switching Test Circuit**

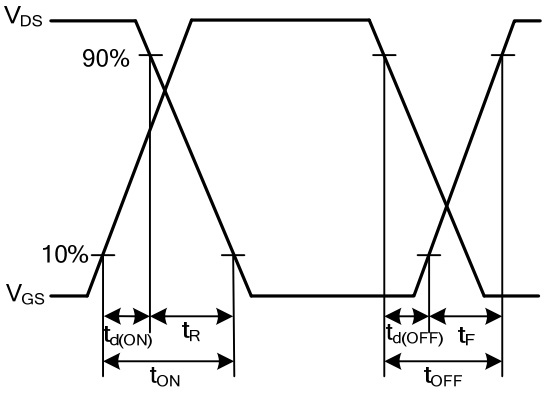


**Resistive Switching Waveforms**

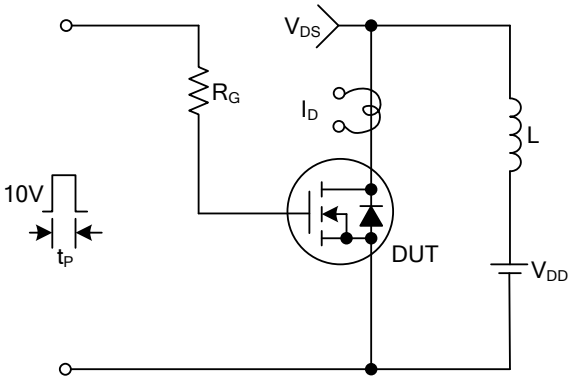


**Unclamped Inductive Switching Test Circuit**

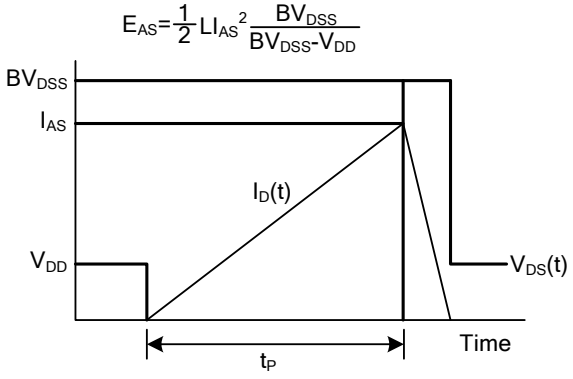


**Unclamped Inductive Switching Waveforms**

■ TEST CIRCUITS AND WAVEFORMS(Cont.)

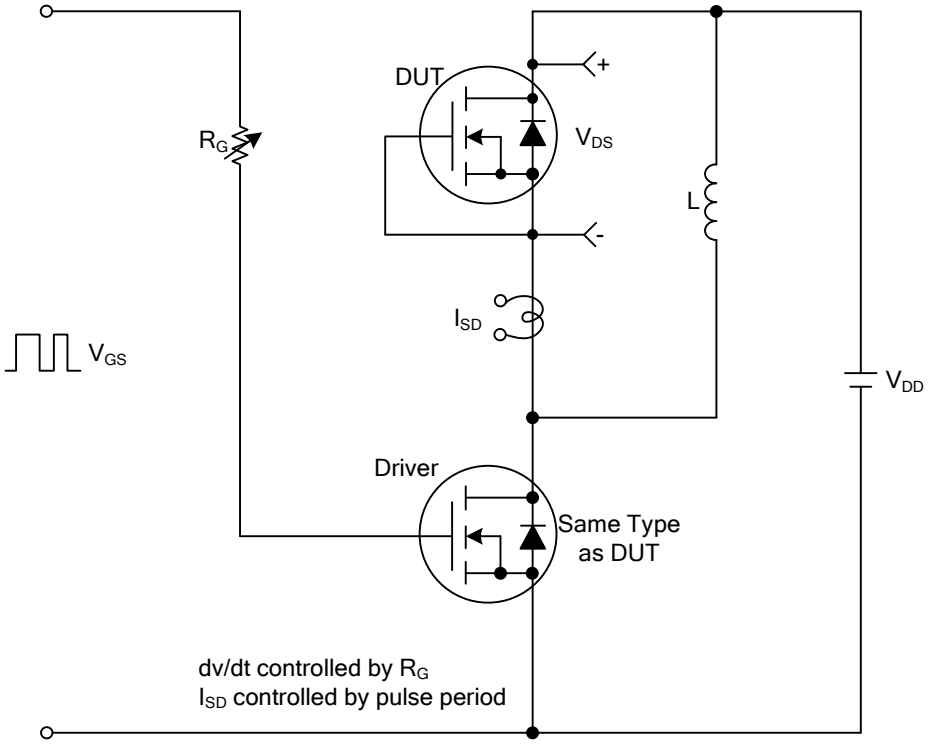


Peak Diode Recovery dv/dt Test Circuit & Waveforms

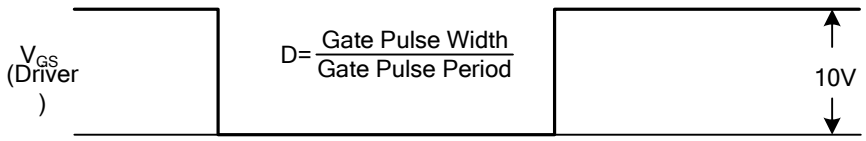


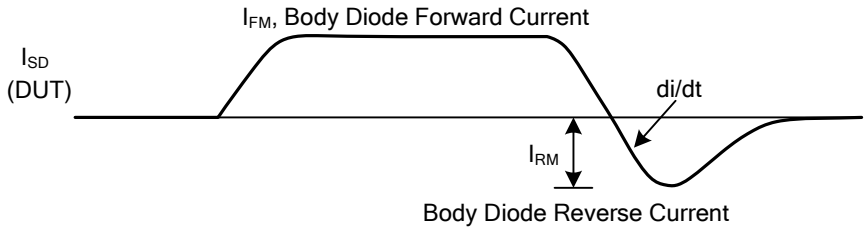


Body Diode Reverse Current

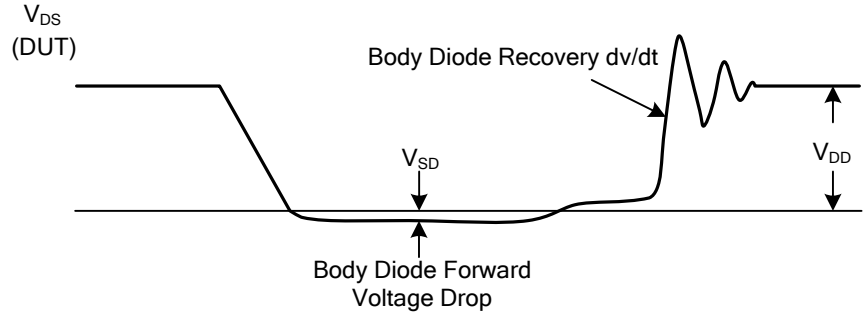

## ■ TYPICAL CHARACTERISTICS

Drain Current vs. Source to Drain Voltage

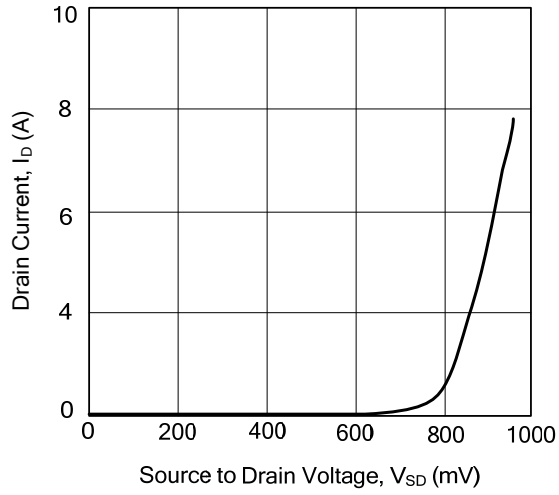


Drain-Source On State Resistance Characteristics

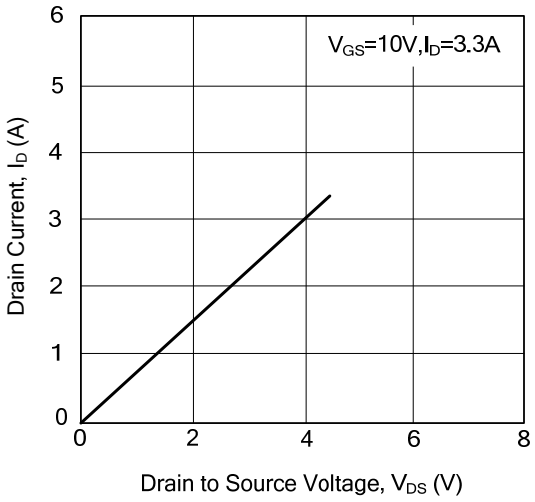


Drain Current vs. Gate Threshold Voltage

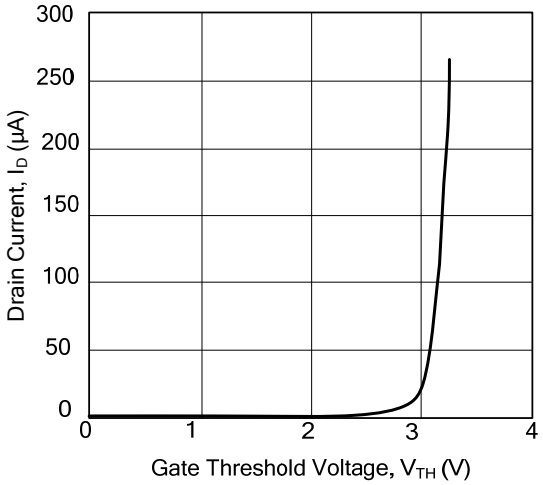


Drain Current vs. Drain-Source Breakdown Voltage

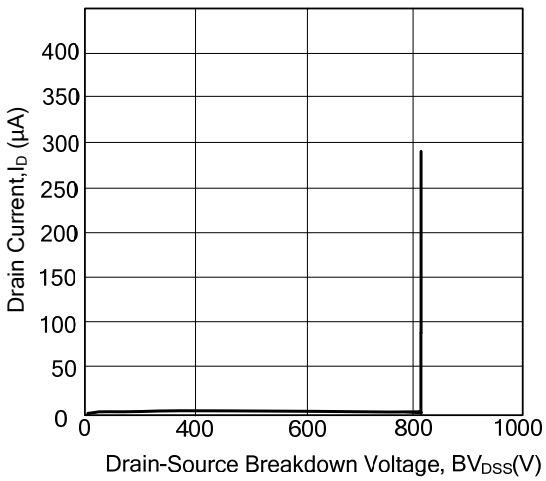


UTC assumes no responsibility for equipment failures that result from using products at values that exceed, even momentarily, rated values (such as maximum ratings, operating condition ranges, or other parameters) listed in products specifications of any and all UTC products described or contained herein. UTC products are not designed for use in life support appliances, devices or systems where malfunction of these products can be reasonably expected to result in personal injury. Reproduction in whole or in part is prohibited without the prior written consent of the copyright owner. The information presented in this document does not form part of any quotation or contract, is believed to be accurate and reliable and may be changed without notice.

ENTEGRECİ

Bu belge www.entegreci.com üzerinden sunulmaktadır.

# Elektronik komponent tedarikinde Entegreci

Entegreci, Eskişehir merkezli, Türkiye geneline satış yapan bir elektronik komponent mağazasıdır. Entegreler (IC), mikrodenetleyiciler, transistörler, diyotlar, pasif elemanlar, konnektörler, modüller ve geliştirme kartları tek adetten seri üretim adetlerine kadar satılır. Ürün sayfalarında güncel stok durumunu, fiyatı ve datasheet bağlantısını bulabilirsiniz.

### Parça koduyla arama

Üretici parça numarasını yazın; stok ve fiyatı hemen görün.

**www.entegreci.com**

### Ürün kategorileri

Entegreden kapasitöre tüm elektronik komponent kategorileri.

**Kategorilere göz atın**

### Üreticiler

Aradığınız üreticinin ürünlerini tek sayfada inceleyin.

**Üreticileri görün**

### Toplu alım ve teklif

Listede olmayan ya da yüksek adetli parçalar için teklif isteyin.

**Teklif isteyin**

**www.entegreci.com** | **destek@entegreci.com** | **0850 305 90 34**

Entegreci is an online electronic components store based in Türkiye. Search by manufacturer part number to see stock, prices and datasheets for integrated circuits, microcontrollers, transistors, passive components and connectors, or request a quote for parts that are not listed.

Bu sayfa Entegreci tarafından eklenmiştir. Belgenin önceki sayfaları asıl yayıncısına aittir ve içeriği değiştirilmemiştir; en güncel sürüm için belgenin yayıncısına başvurun.