# 6R600P-VB TO220F Datasheet

# N-Channel 650V (D-S) Power MOSFET

| PRODUCT SUMMARY | | |
|---|---|---|
| $V_{DS}$ (V) at $T_J$ max. | 650 | |
| $R_{DS(on)}$ at 25 °C (Ω) | $V_{GS}$ = 10 V | 0.65 |
| $Q_g$ max. (nC) | 43 | |
| $Q_{gs}$ (nC) | 5 | |
| $Q_{gd}$ (nC) | 22 | |
| Configuration | Single | |

## FEATURES

- Low figure-of-merit (FOM) $R_{on}$ x $Q_g$
- Low input capacitance ($C_{iss}$)
- Reduced switching and conduction losses
- Ultra low gate charge ($Q_g$)
- Avalanche energy rated (UIS)

RoHS

## APPLICATIONS

- Server and telecom power supplies
- Switch mode power supplies (SMPS)
- Power factor correction power supplies (PFC)
- Lighting
  - High-intensity discharge (HID)
  - Fluorescent ballast lighting
- Industrial

**TO-220 FULLPAK**

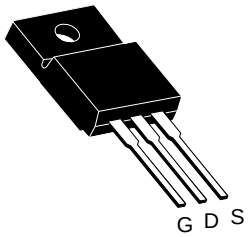


Top View

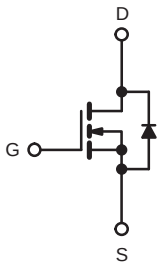


N-Channel MOSFET

| ABSOLUTE MAXIMUM RATINGS ($T_C$ = 25 °C, unless otherwise noted) | | | | | |
|---|---|---|---|---|---|
| **PARAMETER** | | | **SYMBOL** | **LIMIT** | **UNIT** |
| Drain-Source Voltage | | | $V_{DS}$ | 650 | V |
| Gate-Source Voltage | | | $V_{GS}$ | ± 30 | |
| Continuous Drain Current ($T_J$ = 150 °C) | $V_{GS}$ at 10 V | $T_C$ = 25 °C | $I_D$ | 12 | A |
| | | $T_C$ = 100 °C | | 9.4 | |
| Pulsed Drain Current [a] | | | $I_{DM}$ | 45 | |
| Linear Derating Factor | | | | 3.6 | W/°C |
| Single Pulse Avalanche Energy [b] | | | $E_{AS}$ | 290 | mJ |
| Maximum Power Dissipation | | | $P_D$ | 106 /34 | W |
| Operating Junction and Storage Temperature Range | | | $T_J$, $T_{stg}$ | -55 to +150 | °C |
| Drain-Source Voltage Slope | $T_J$ = 125 °C | | dV/dt | 15 | V/ns |
| Reverse Diode dV/dt [d] | | | | 4.1 | |
| Soldering Recommendations (Peak Temperature) [c] | for 10 s | | | 300 | °C |

**Notes**

a. Repetitive rating; pulse width limited by maximum junction temperature.
b. $V_{DD}$ = 50 V, starting $T_J$ = 25 °C, L = 28.2 mH, $R_g$ = 25 Ω, $I_{AS}$ = 4.5 A.
c. 1.6 mm from case.
d. $I_{SD} \leq I_D$, dI/dt = 100 A/μs, starting $T_J$ = 25 °C.

| THERMAL RESISTANCE RATINGS | | | | |
|---|---|---|---|---|
| **PARAMETER** | **SYMBOL** | **TYP.** | **MAX.** | **UNIT** |
| Maximum Junction-to-Ambient | $R_{thJA}$ | - | 60 | °C/W |
| Maximum Junction-to-Case (Drain) | $R_{thJC}$ | - | 0.8 | |

| **SPECIFICATIONS** ($T_J$ = 25 °C, unless otherwise noted) | | | | | | |
|---|---|---|---|---|---|---|
| **PARAMETER** | **SYMBOL** | **TEST CONDITIONS** | **MIN.** | **TYP.** | **MAX.** | **UNIT** |
| **Static** | | | | | | |
| Drain-Source Breakdown Voltage | $V_{DS}$ | $V_{GS}$ = 0 V, $I_D$ = 250 µA | 650 | - | - | V |
| $V_{DS}$ Temperature Coefficient | $\Delta V_{DS}/T_J$ | Reference to 25 °C, $I_D$ = 1 mA | - | 0.75 | - | V/°C |
| Gate-Source Threshold Voltage (N) | $V_{GS(th)}$ | $V_{DS}$ = $V_{GS}$, $I_D$ = 250 µA | 3 | - | 5 | V |
| Gate-Source Leakage | $I_{GSS}$ | $V_{GS}$ = ± 20 V | - | - | ± 100 | nA |
| | | $V_{GS}$ = ± 30 V | - | - | ± 1 | µA |
| Zero Gate Voltage Drain Current | $I_{DSS}$ | $V_{DS}$ = 650 V, $V_{GS}$ = 0 V | - | - | 1 | µA |
| | | $V_{DS}$ = 520 V, $V_{GS}$ = 0 V, $T_J$ = 125 °C | - | - | 10 | |
| Drain-Source On-State Resistance | $R_{DS(on)}$ | $V_{GS}$ = 10 V, $I_D$ = 8 A | - | 0.65 | - | Ω |
| Forward Transconductance | $g_{fs}$ | $V_{DS}$ = 30 V, $I_D$ = 8 A | - | 16 | - | S |
| **Dynamic** | | | | | | |
| Input Capacitance | $C_{iss}$ | $V_{GS}$ = 0 V, $V_{DS}$ = 100 V, f = 1 MHz | - | 1600 | - | pF |
| Output Capacitance | $C_{oss}$ | | - | 300 | - | |
| Reverse Transfer Capacitance | $C_{rss}$ | | - | 200 | - | |
| Effective Output Capacitance, Energy Related [a] | $C_{o(er)}$ | $V_{DS}$ = 0 V to 520 V, $V_{GS}$ = 0 V | - | 63 | - | |
| Effective Output Capacitance, Time Related [b] | $C_{o(tr)}$ | | - | 213 | - | |
| Total Gate Charge | $Q_g$ | $V_{GS}$ = 10 V; $I_D$ = 8 A, $V_{DS}$ = 520 V | - | 43 | 96 | nC |
| Gate-Source Charge | $Q_{gs}$ | | - | 5 | - | |
| Gate-Drain Charge | $Q_{gd}$ | | - | 22 | - | |
| Turn-On Delay Time | $t_{d(on)}$ | $V_{DD}$ = 520 V, $I_D$ = 8 A, $V_{GS}$ = 10 V, $R_g$ = 9.1 Ω | - | 13 | 25 | ns |
| Rise Time | $t_r$ | | - | 11 | 35 | |
| Turn-Off Delay Time | $t_{d(off)}$ | | - | 81 | 90 | |
| Fall Time | $t_f$ | | - | 25 | 40 | |
| Gate Input Resistance | $R_g$ | f = 1 MHz, open drain | - | 3.5 | - | Ω |
| **Drain-Source Body Diode Characteristics** | | | | | | |
| Continuous Source-Drain Diode Current | $I_S$ | MOSFET symbol showing the integral reverse p - n junction diode  | - | - | 15 | A |
| Pulsed Diode Forward Current | $I_{SM}$ | | - | - | 40 | |
| Diode Forward Voltage | $V_{SD}$ | $T_J$ = 25 °C, $I_S$ = 8 A, $V_{GS}$ = 0 V | - | - | 1.5 | V |
| Reverse Recovery Time | $t_{rr}$ | $T_J$ = 25 °C, $I_F$ = $I_S$ = 8 A, dI/dt = 100 A/µs, $V_R$ = 400 V | - | 345 | - | ns |
| Reverse Recovery Charge | $Q_{rr}$ | | - | 4.5 | - | µC |
| Reverse Recovery Current | $I_{RRM}$ | | - | 35 | - | A |

**Notes**

a. $C_{oss(er)}$ is a fixed capacitance that gives the same energy as $C_{oss}$ while $V_{DS}$ is rising from 0 % to 80 % $V_{DSS}$.

b. $C_{oss(tr)}$ is a fixed capacitance that gives the same charging time as $C_{oss}$ while $V_{DS}$ is rising from 0 % to 80 % $V_{DSS}$.

## TYPICAL CHARACTERISTICS (25 °C, unless otherwise noted)

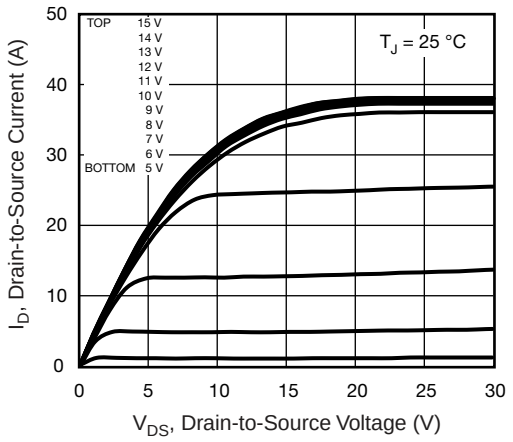


**Fig. 1 - Typical Output Characteristics**

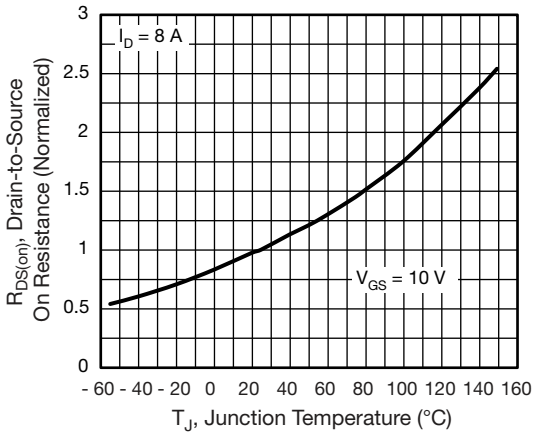


**Fig. 4 - Normalized On-Resistance vs. Temperature**

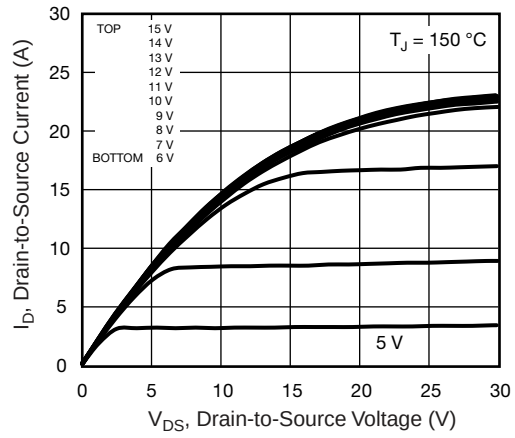


**Fig. 2 - Typical Output Characteristics**

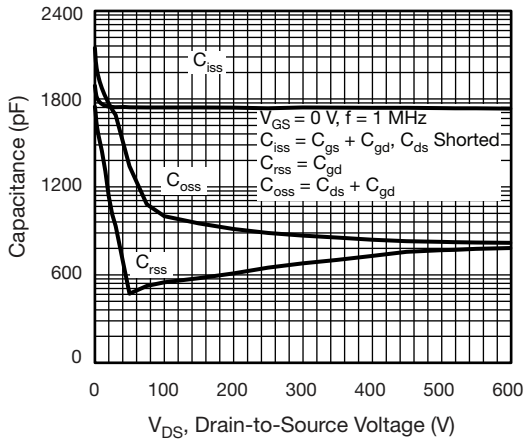


**Fig. 5 - Typical Capacitance vs. Drain-to-Source Voltage**

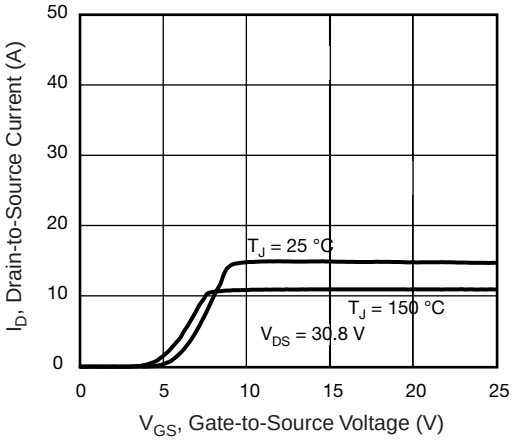


**Fig. 3 - Typical Transfer Characteristics**

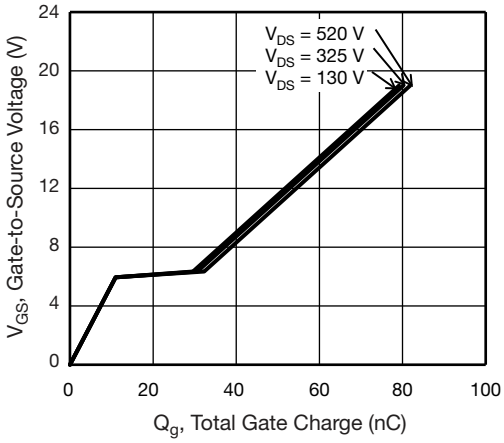


**Fig. 6 - Typical Gate Charge vs. Gate-to-Source Voltage**

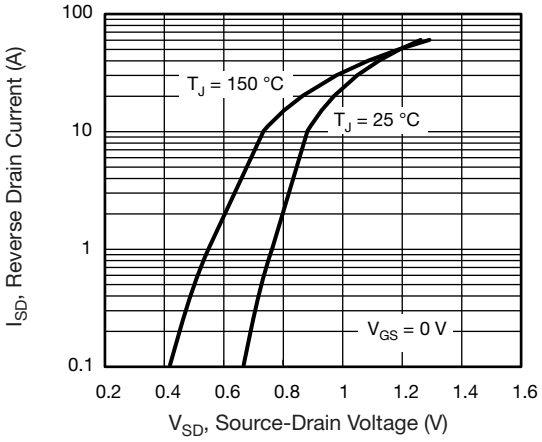


**Fig. 7 - Typical Source-Drain Diode Forward Voltage**

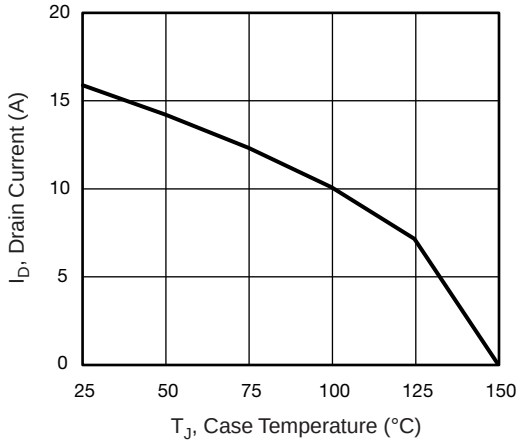


**Fig. 9 - Maximum Drain Current vs. Case Temperature**

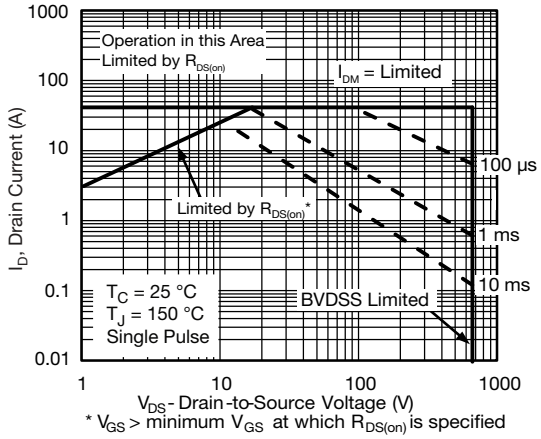


**Fig. 8 - Maximum Safe Operating Area**

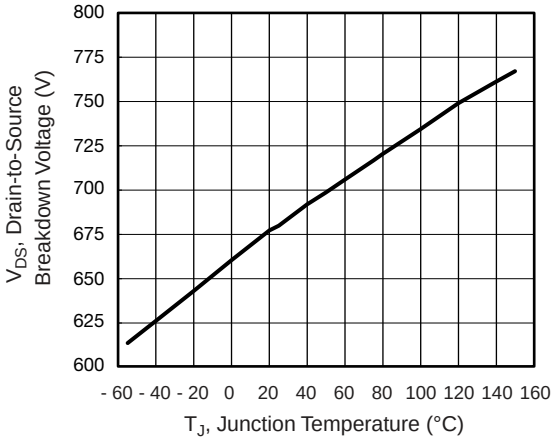


**Fig. 10 - Temperature vs. Drain-to-Source Voltage**

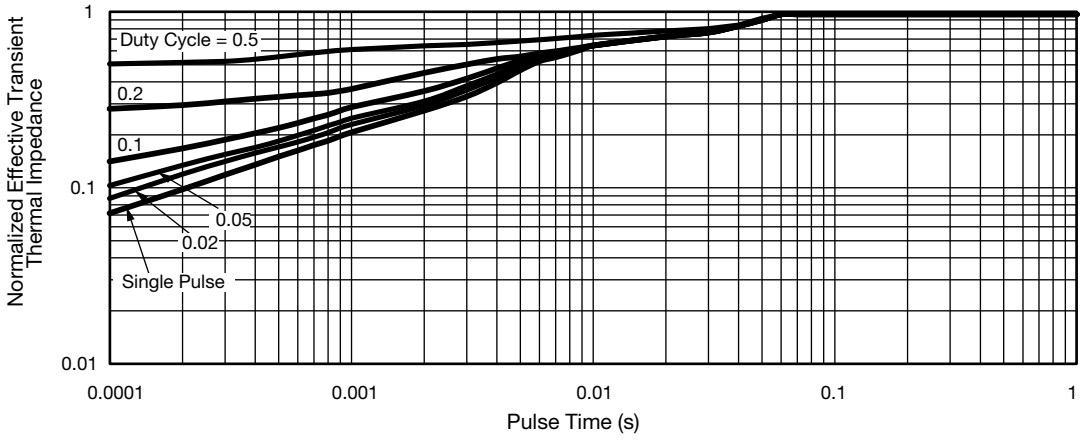


**Fig. 11 - Normalized Thermal Transient Impedance, Junction-to-Case**

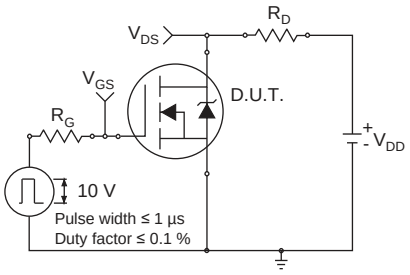


**Fig. 12 - Switching Time Test Circuit**

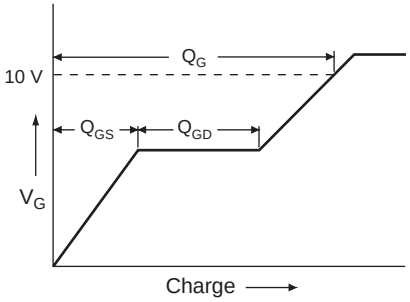


**Fig. 16 - Basic Gate Charge Waveform**

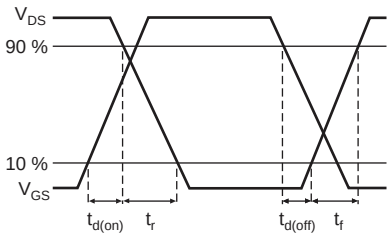


**Fig. 13 - Switching Time Waveforms**

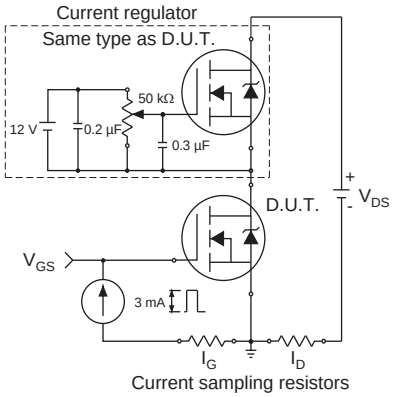


**Fig. 17 - Gate Charge Test Circuit**

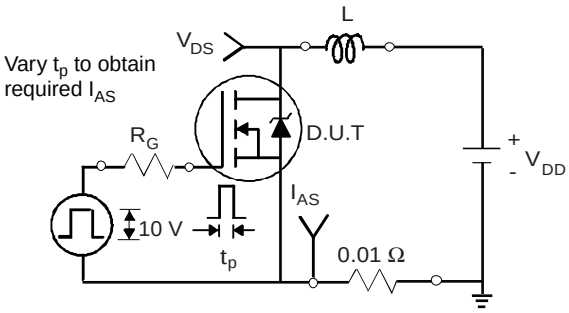


**Fig. 14 - Unclamped Inductive Test Circuit**

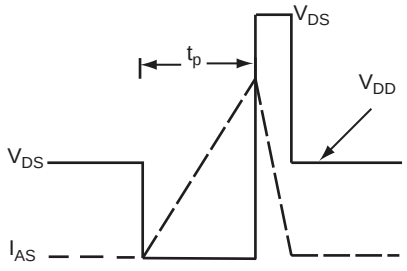


**Fig. 15 - Unclamped Inductive Waveforms**

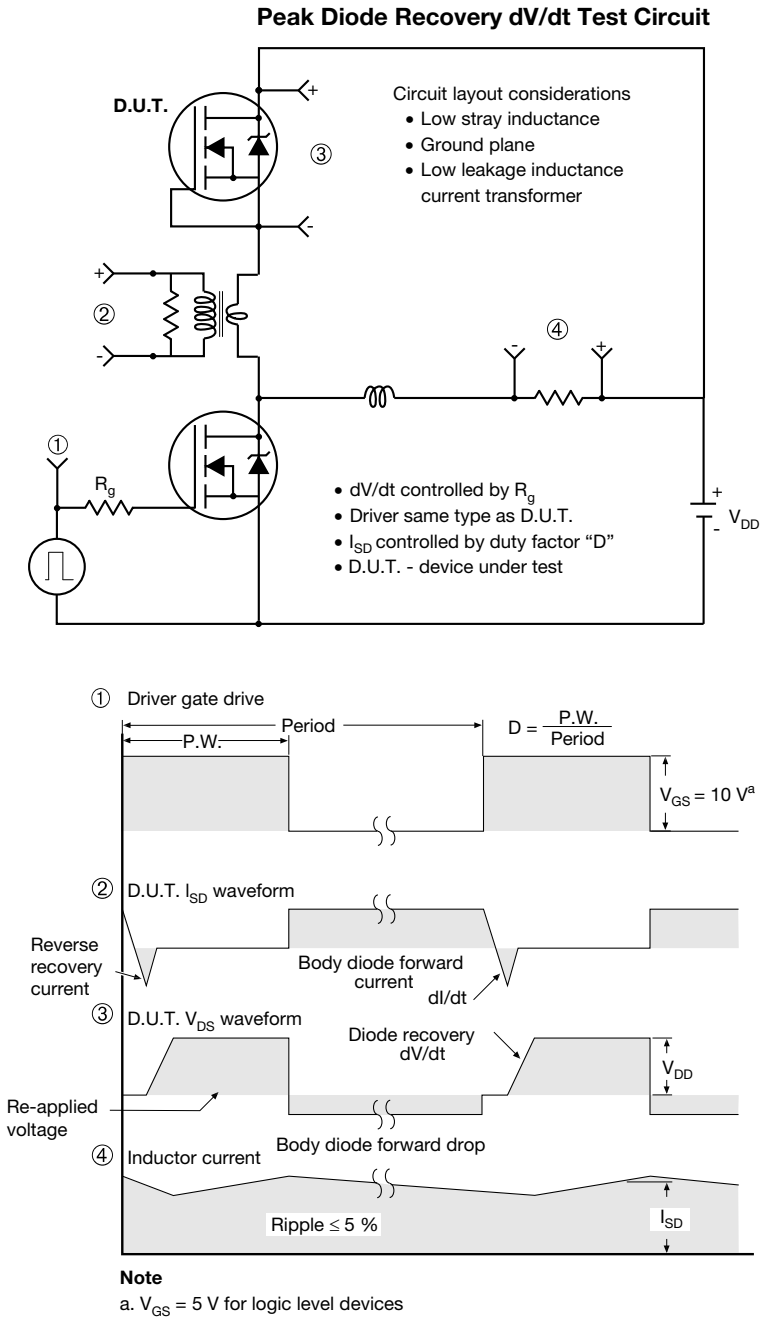


**Note**

a. $V_{GS}$ = 5 V for logic level devices

**Fig. 18 - For N-Channel**

## TO-220 FULLPAK (HIGH VOLTAGE)

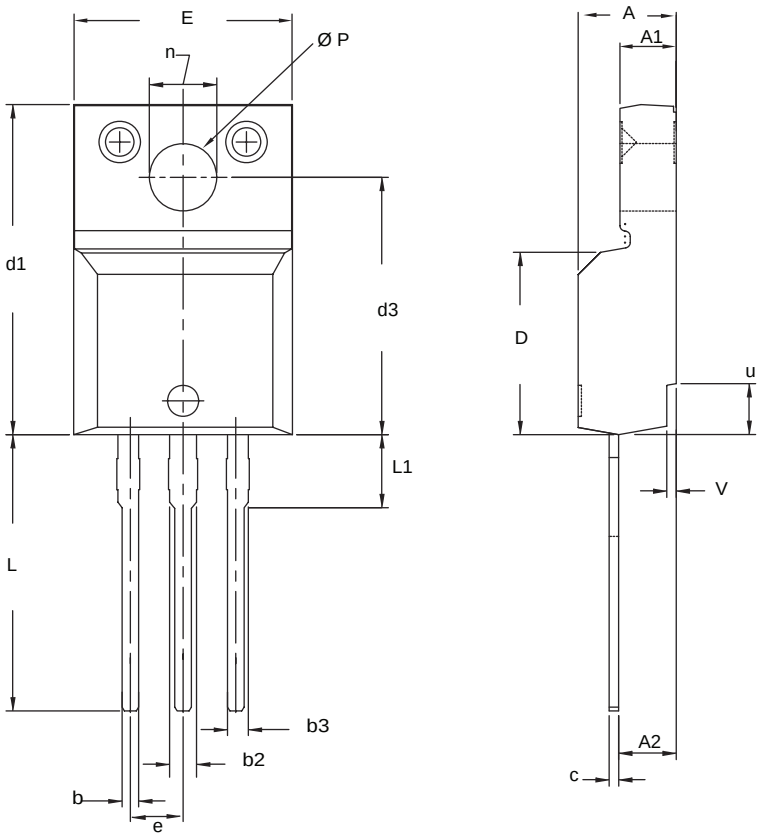


| | MILLIMETERS | | INCHES | |
|---|---|---|---|---|
| **DIM.** | **MIN.** | **MAX.** | **MIN.** | **MAX.** |
| A | 4.570 | 4.830 | 0.180 | 0.190 |
| A1 | 2.570 | 2.830 | 0.101 | 0.111 |
| A2 | 2.510 | 2.850 | 0.099 | 0.112 |
| b | 0.622 | 0.890 | 0.024 | 0.035 |
| b2 | 1.229 | 1.400 | 0.048 | 0.055 |
| b3 | 1.229 | 1.400 | 0.048 | 0.055 |
| c | 0.440 | 0.629 | 0.017 | 0.025 |
| D | 8.650 | 9.800 | 0.341 | 0.386 |
| d1 | 15.88 | 16.120 | 0.622 | 0.635 |
| d3 | 12.300 | 12.920 | 0.484 | 0.509 |
| E | 10.360 | 10.630 | 0.408 | 0.419 |
| e | 2.54 BSC | | 0.100 BSC | |
| L | 13.200 | 13.730 | 0.520 | 0.541 |
| L1 | 3.100 | 3.500 | 0.122 | 0.138 |
| n | 6.050 | 6.150 | 0.238 | 0.242 |
| Ø P | 3.050 | 3.450 | 0.120 | 0.136 |
| u | 2.400 | 2.500 | 0.094 | 0.098 |
| v | 0.400 | 0.500 | 0.016 | 0.020 |
| ECN: X09-0126-Rev. B, 26-Oct-09<br>DWG: 5972 | | | | |

**Notes**

1. To be used only for process drawing.
2. These dimensions apply to all TO-220, FULLPAK leadframe versions 3 leads.
3. All critical dimensions should C meet $C_{pk} > 1.33$.
4. All dimensions include burrs and plating thickness.
5. No chipping or package damage.

# Disclaimer

All products due to improve reliability, function or design or for other reasons, product specifications and data are subject to change without notice.

Taiwan VBsemi Electronics Co., Ltd., branches, agents, employees, and all persons acting on its or their representatives (collectively, the "Taiwan VBsemi"), assumes no responsibility for any errors, inaccuracies or incomplete data contained in the table or any other any disclosure of any information related to the product.(www.VBsemi.com)

Taiwan VBsemi makes no guarantee, representation or warranty on the product for any particular purpose of any goods or continuous production. To the maximum extent permitted by applicable law on Taiwan VBsemi relinquished: (1) any application and all liability arising out of or use of any products; (2) any and all liability, including but not limited to special, consequential damages or incidental ; (3) any and all implied warranties, including a particular purpose, non-infringement and merchantability guarantee.

Statement on certain types of applications are based on knowledge of the product is often used in a typical application of the general product VBsemi Taiwan demand that the Taiwan VBsemi of. Statement on whether the product is suitable for a particular application is non-binding. It is the customer's responsibility to verify specific product features in the products described in the specification is appropriate for use in a particular application. Parameter data sheets and technical specifications can be provided may vary depending on the application and performance over time. All operating parameters, including typical parameters must be made by customer's technical experts validated for each customer application. Product specifications do not expand or modify Taiwan VBsemi purchasing terms and conditions, including but not limited to warranty herein.

Unless expressly stated in writing, Taiwan VBsemi products are not intended for use in medical, life saving, or life sustaining applications or any other application. Wherein VBsemi product failure could lead to personal injury or death, use or sale of products used in Taiwan VBsemi such applications using client did not express their own risk. Contact your authorized Taiwan VBsemi people who are related to product design applications and other terms and conditions in writing.

The information provided in this document and the company's products without a license, express or implied, by estoppel or otherwise, to any intellectual property rights granted to the VBsemi act or document. Product names and trademarks referred to herein are trademarks of their respective representatives will be all.

# Material Category Policy

**Taiwan VBsemi Electronics Co., Ltd., hereby certify that all of the products are determined to be RoHS compliant and meets the definition of restrictions under Directive of the European Parliament 2011/65 / EU, 2011 Nian. 6. 8 Ri Yue restrict the use of certain hazardous substances in electrical and electronic equipment (EEE) - modification, unless otherwise specified as inconsistent.(www.VBsemi.com)**

**Please note that some documents may still refer to Taiwan VBsemi RoHS Directive 2002/95 / EC. We confirm that all products identified as consistent with the Directive 2002/95 / EC European Directive 2011/65 /.**

**Taiwan VBsemi Electronics Co., Ltd. hereby certify that all of its products comply identified as halogen-free halogen-free standards required by the JEDEC JS709A. Please note that some Taiwanese VBsemi documents still refer to the definition of IEC 61249-2-21, and we are sure that all products conform to confirm compliance with IEC 61249-2-21 standard level JS709A.**

ENTEGRECİ

Bu belge www.entegreci.com üzerinden sunulmaktadır.

# Elektronik komponent tedarikinde Entegreci

Entegreci, Eskişehir merkezli, Türkiye geneline satış yapan bir elektronik komponent mağazasıdır. Entegreler (IC), mikrodenetleyiciler, transistörler, diyotlar, pasif elemanlar, konnektörler, modüller ve geliştirme kartları tek adetten seri üretim adetlerine kadar satılır. Ürün sayfalarında güncel stok durumunu, fiyatı ve datasheet bağlantısını bulabilirsiniz.

### Parça koduyla arama

Üretici parça numarasını yazın; stok ve fiyatı hemen görün.

**www.entegreci.com**

### Ürün kategorileri

Entegreden kapasitöre tüm elektronik komponent kategorileri.

**Kategorilere göz atın**

### Üreticiler

Aradığınız üreticinin ürünlerini tek sayfada inceleyin.

**Üreticileri görün**

### Toplu alım ve teklif

Listede olmayan ya da yüksek adetli parçalar için teklif isteyin.

**Teklif isteyin**

**www.entegreci.com** | **destek@entegreci.com** | **0850 305 90 34**

Entegreci is an online electronic components store based in Türkiye. Search by manufacturer part number to see stock, prices and datasheets for integrated circuits, microcontrollers, transistors, passive components and connectors, or request a quote for parts that are not listed.

Bu sayfa Entegreci tarafından eklenmiştir. Belgenin önceki sayfaları asıl yayıncısına aittir ve içeriği değiştirilmemiştir; en güncel sürüm için belgenin yayıncısına başvurun.