UMW 5N65F

650V N-Channel MOSFET

1.Features

- $V_{DS\ (V)}$=650V
- I_D=5A
- $R_{DS(ON)}$=2Ω

2.Pinning information

Pin	Symbol	Description
1	G	GATE
2	D	DRAIN
3	S	SOURCE

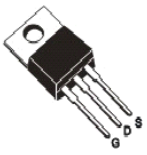

TO-220

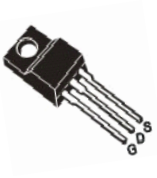

TO-220FP

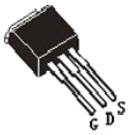

TO-252



TO-263

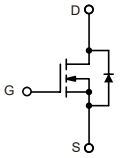

N-Channel

3.Absolute Maximum Ratings T_C= 25°C

Parameter		Symbol	Rating	Units
Drain-source Voltage		V_{DS}	650	V
gate-source Voltage		V_{GS}	±30	V
Continuous Drain Current	T_C=25°C	I_D	5	A
Continuous Drain Current	T_C=100°C	I_D	3.15	A
Drain Current －Pulsed ①		I_{DM}	20	A
Power Dissipation		P_D	TO-220:120,TO-220FP:50	W
			TO-262/263:120	W
Junction Temperature		T_J	150	°C
Storage Temperature		T_{STG}	-55 to 150	°C
Single Pulse Avalanche Energy ②		E_{AS}	210	mJ

4.Thermal resistance rating

Parameter	Symbol	MAX			Units
		TO-220	TO-220FP	TO-262/263	
Thermal Resistance Junction-case	R_{thJC}	1.04	2.50	1.04	°C/W
Thermal Resistance Junction-ambient	R_{thJA}	62.5	62.5	62.5	°C/W

5.Electrical Characteristic (T_C=25°C unless otherwise noted)

Parameter	Symbol	Conditions	Min	Typ	Max	Units
Drain-source Breakdown Voltage	BV_{DSS}	V_{GS}=0V, I_D=250μA	650			V
Breakdown Voltage Temperature Coefficient	$\frac{\Delta BV_{DSS}}{\Delta T_J}$	I_D=250μA Referenced to 25°C		0.6		V/°C
Gate Threshold Voltage	$V_{GS(th)}$	V_{DS}=V_{GS}, I_D=250μA	2		4	V
Drain-source Leakage Current	I_{DSS}	V_{DS}=650V, V_{GS}=0V, T_J=25°C			10	μA
		V_{DS}=480V, V_{GS}=0V, T_J=125°C			100	μA
Forward Transconductance	g_{fs}	V_{DS}=40V, I_D=2.5A ③		4		S
Gate-body Leakage Current (V_{DS}=0)	I_{GSS}	V_{GS}=±30V			±100	nA
Static Drain-source On Resistance	$R_{DS(ON)}$	V_{GS}=10V, I_D=2.5A ③		1.5	2	Ω
Input capacitance	C_{iss}	V_{GS}=0V, V_{DS}=25V, f=1MHz		730		pF
Output capacitance	C_{oss}			25		pF
Reverse transfer capacitance	C_{rss}			16		pF
Turn -Off Delay Time	$t_{D(off)}$	V_{DD}=300V, I_D=5A, R_G=25Ω ③		38		ns
Total Gate Charge	Q_g	I_D=5A, V_{DS}=480V, V_{GS}=10V ③		15		nC
Gate-to-Source Charge	Q_{gs}			3.7		nC
Gate-to-Drain Charge	Q_{gd}			4.8		nC
Continuous Diode Forward Current	I_S				5	A
Diode Forward Voltage	V_{SD}	T_J=25°C, I_S=5A, V_{GS}=0V ③			1.4	V
Reverse Recovery Time	t_{rr}	T_J=25°C, I_F=5A di/dt=100A/μs ③		270		ns
Reverse Recovery Charge	Q_{rr}			1.9		uC

Notes:

① Repetitive rating: Pulse width limited by maximum junction temperature.

② Starting T_J=25°C, V_{DD} =50V, L=18.9mH, R_G =25Ω, I_{AS}=5A.

③ Pulse Test : Pulse width ≤ 300μs, Duty cycle ≤ 2%.

6.1Typical characteristic

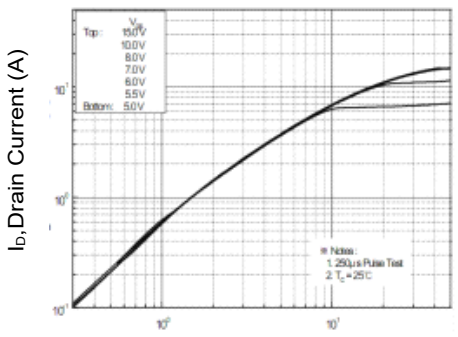

Figure 1: Typical Output Characteristics, Tc=25°C

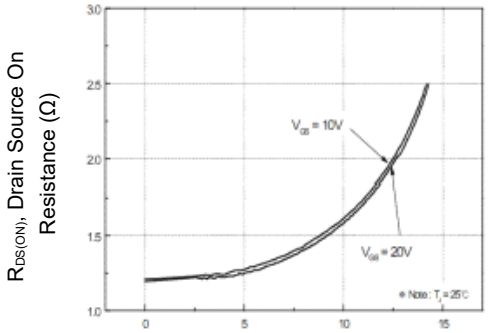

Figure 2: On-Resistance Vs. Drain Current and Gate Voltage

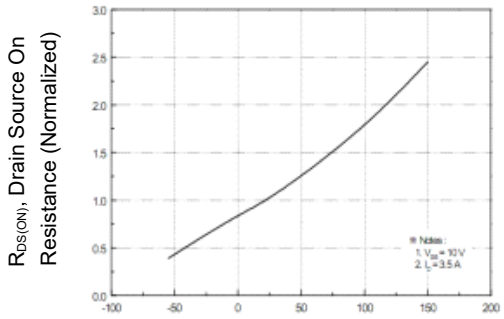

Figure 3: Normalized On-Resistance Vs.Temperature

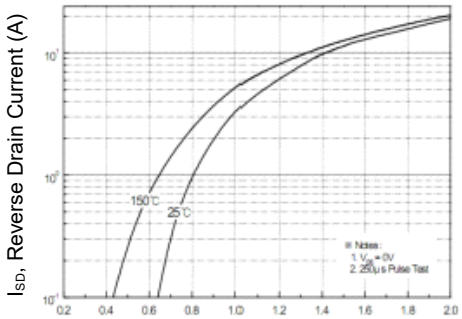

Figure 4: Typical Source-Drain Diode Forward Voltage

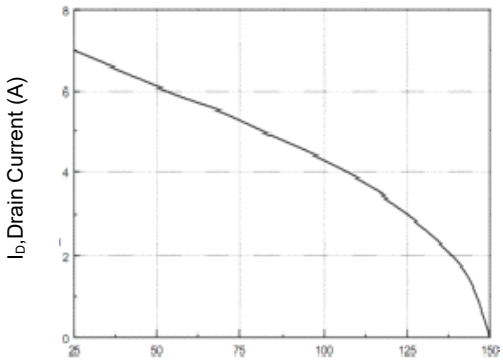

Figure 5: Maximum Drain Current Vs.Case Temperature

6.2Typical characteristic

5N65(TO-220)

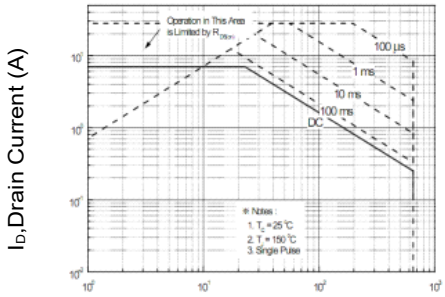

V_{DS},Drain to Source Voltage (V)

Figure 7: Maximum Safe Operating Area

5N65(TO-220FP)

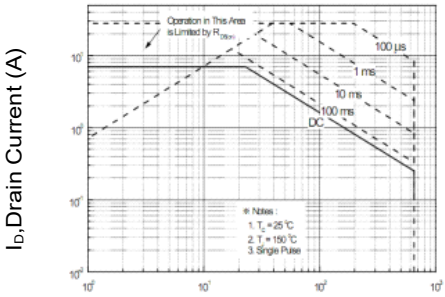

V_{DS},Drain to Source Voltage (V)

Figure 8: Maximum Safe Operating Area

5N65(TO-262&263)

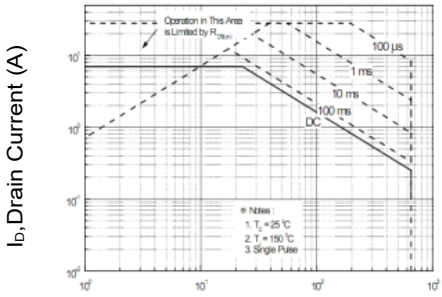

V_{DS},Drain to Source Voltage (V)

Figure 9: Maximum Safe Operating Area

7.1 TO-220 Package Outline Dimensions

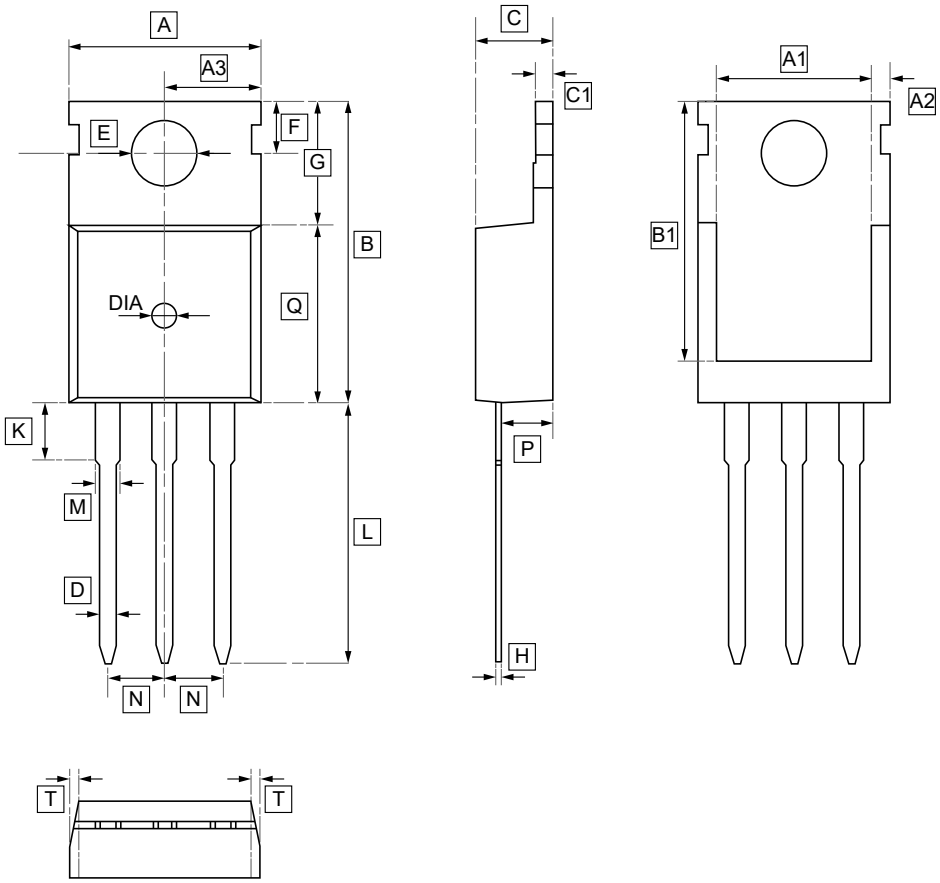

DIMENSIONS (mm are the original dimensions)

Symbol	A	A1	A2	A3	B	B1	C	C1	D	E	F	G
Min	9.7	8.44	1.05	4.8	15.4	12.9	4.28	1.1	0.6	3.4	2.65	5.2
Max	10.3	8.84	1.25	5.2	16.2	13.5	4.68	1.5	1.0	3.8	3.25	5.8

Symbol	H	K	L	L1	M	N	P	Q	T	DIA
Min	0.4	2.9	12.8	2.7	1.15	2.49	2.1	8.7	W:0.35	⊙1.5 (deep 0.2)
Max	0.6	3.3	13.6	3.3	1.35	2.59	2.7	9.3		

7.2 TO-220F Package Outline Dimensions

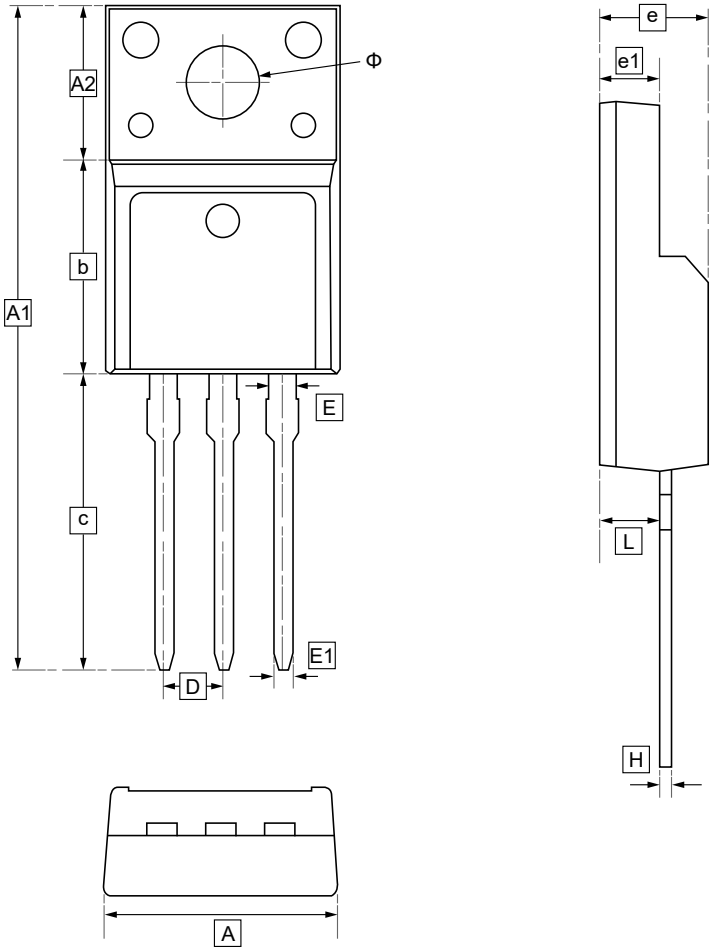

DIMENSIONS (mm are the original dimensions)

Symbol	A	A1	A2	b	c	D	E	E1	Φ	e	e1	L
Min	10.00	28.80	6.58	9.12	12.95	2.54	1.15	0.75	3.13	4.50	2.40	2.50
Max	10.20	29.20	6.78	9.32	13.25		1.25	0.85	3.23	4.70	2.60	2.70

Symbol	H
Min	0.45
Max	0.55

7.3 TO-262 Package Outline Dimensions

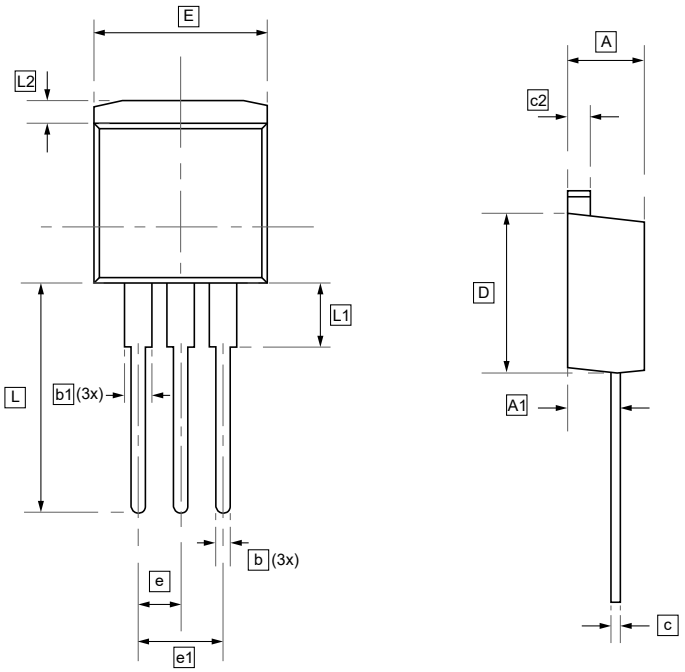

DIMENSIONS (mm are the original dimensions)

Symbol	A	A1	b	b1	c	c2	D	e	e1	E	L	L1	L2
Min	3.80	2.00	0.60	1.20	0.40	1.10	-	-	-	9.90	12.50	0.80	-
Max	4.80	2.80	1.00	1.40	0.70	1.40	9.60	-	5.30	10.70	14.50	1.20	1.50

7.4 TO-263 Package Outline Dimensions

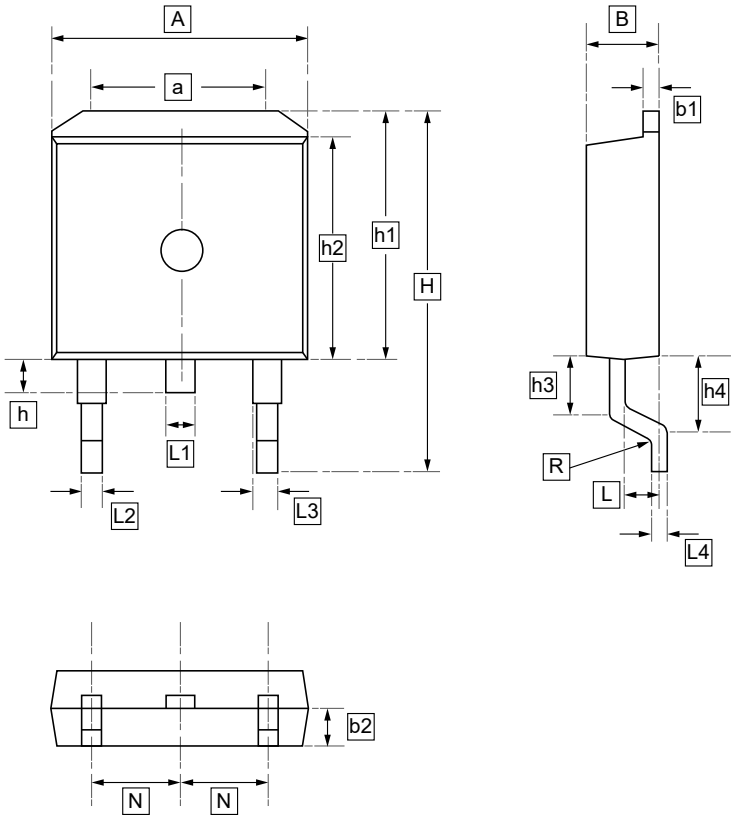

DIMENSIONS (mm are the original dimensions)

Symbol	A	a	B	b1	b2	H	h	h1	h2	h3	h4	L	L1	L2	L3
Min	9.6	7.2	4.3	1.25	2.2	15.2	1.34	10.3	9.1	1.34	2.5	2.2	1.2	0.7	1.2
Max	10.0	7.6	4.7	1.35	2.6	15.8	1.74	10.7	9.3	1.74	2.9	2.6	1.4	0.9	1.4

Symbol	L4	N	R
Min	0.4	2.4	0.45
Max	0.6	2.5	0.55

8.Ordering information



yy: Year Code
ww: Week Code

Order Code	Package	Base QTY	Delivery Mode
UMW 5N65F	TO-220F	1000	Tape and box

9.Disclaimer

UMW reserves the right to make changes to all products, specifications. Customers should obtain the latest version of product documentation and verify the completeness and currency of the information before placing an order.

When applying our products, please do not exceed the maximum rated values, as this may affect the reliability of the entire system. Under certain conditions, any semiconductor product may experience faults or failures. Buyers are responsible for adhering to safety standards and implementing safety measures during system design, prototyping, and manufacturing when using our products to prevent potential failure risks that could lead to personal injury or property damage.

Unless explicitly stated in writing, UMW products are not intended for use in medical, life-saving, or life-sustaining applications, nor for any other applications where product failure could result in personal injury or death. If customers use or sell the product for such applications without explicit authorization, they assume all associated risks.

When reselling, applying, or exporting, please comply with export control laws and regulations of China, the United States, the United Kingdom, the European Union, and other relevant countries, regions, and international organizations.

This document and any actions by UMW do not grant any intellectual property rights, whether express or implied, by estoppel or otherwise. The product names and marks mentioned herein may be trademarks of their respective owners.

ENTEGRECİ

Bu belge www.entegreci.com üzerinden sunulmaktadır.

Elektronik komponent tedarikinde Entegreci

Entegreci, Eskişehir merkezli, Türkiye geneline satış yapan bir elektronik komponent mağazasıdır. Entegreler (IC), mikrodenetleyiciler, transistörler, diyotlar, pasif elemanlar, konnektörler, modüller ve geliştirme kartları tek adetten seri üretim adetlerine kadar satılır. Ürün sayfalarında güncel stok durumunu, fiyatı ve datasheet bağlantısını bulabilirsiniz.

Parça koduyla arama

Üretici parça numarasını yazın; stok ve fiyatı hemen görün.

www.entegreci.com

Ürün kategorileri

Entegreden kapasitöre tüm elektronik komponent kategorileri.

Kategorilere göz atın

Üreticiler

Aradığınız üreticinin ürünlerini tek sayfada inceleyin.

Üreticileri görün

Toplu alım ve teklif

Listede olmayan ya da yüksek adetli parçalar için teklif isteyin.

Teklif isteyin

www.entegreci.com | **destek@entegreci.com** | **0850 305 90 34**

Entegreci is an online electronic components store based in Türkiye. Search by manufacturer part number to see stock, prices and datasheets for integrated circuits, microcontrollers, transistors, passive components and connectors, or request a quote for parts that are not listed.

Bu sayfa Entegreci tarafından eklenmiştir. Belgenin önceki sayfaları asıl yayıncısına aittir ve içeriği değiştirilmemiştir; en güncel sürüm için belgenin yayıncısına başvurun.