1.Description

The 71XX series is a low-power high-voltage regulator manufactured by CMOS process. The maximum input voltage is 30V and the output voltage range is 3.0V-5.0V.It has the characteristics of high precision output voltage, very low power supply current and very low drop voltage.

2.Features

- Low power consumption: ≤ 3μA
- Low drop voltage: typical value 0.1V
- Low temperature bleaching: typical 50 ppm/°C
- High input voltage: up to 30V
- High precision output voltage: tolerance of + 3%
- Package form: TO-92, sot89-3, sot-23-3

3.Applications

- Battery power supply equipment
- Audio / video equipment
- Various communication equipment
- Security monitoring equipment

4.Pinning information

Pin	Symbol	Description
1	G	GND
2	V	VIN
3	V	VOUT

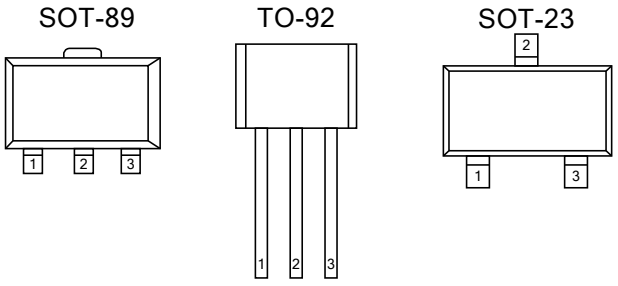

5.Model selection

Name	Model	Maximum input voltage (V)	Output voltage (V)	Tolerance	Packaging Form
71xx	7130	30	3	±3%	TO-92 SOT-89 SOT-23
	7133	30	3.3	±3%	
	7136	30	3.6	±3%	
	7140	30	4	±3%	
	7144	30	4.4	±3%	
	7150	30	5	±3%	

6.Principle block diagram

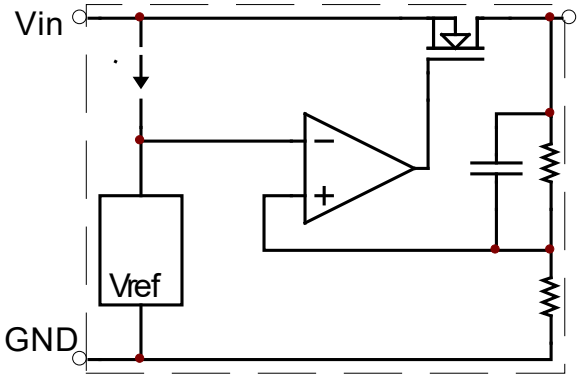

7.Limit parameter

Project	Symbol	parameter	Limit value	Company
Voltage	VIN	Maximum input voltage	30	V
power waste	PD	power waste	400	mW
temperature	Tw	working temperature	-25 to 70	°C
	Tc	Storage temperature	-50 to 125	°C
	Th	welding temperature	260	°C,10s

8.1Electrical properties (7130, T_{OPT}=25°C)

Parameter	Symbol	Conditions	Min	Typ	Max	Units
Output voltage	V_{OUT}	V_{IN}=5V, I_{OUT}=10mA	2.91	3	3.09	V
Output current	I_{OUT}	V_{IN}=5V	60	100		mA
Load regulation	ΔV_{OUT}	V_{IN}=5V, 1mA≤I_{OUT}≤20mA		100	150	mV
Drop voltage	V_{DIF}	I_{OUT}=1mA		100		mV
Quiescent current	I_{SS}	V_{IN}= 5V, no load		2	3	μA
Line Regulation	$\Delta V_{OUT}/(\Delta V_{IN}*V_{OUT})$	4V≤V_{IN}≤30V, I_{OUT}=1mA		0.2		%/V
input voltage	V_{IN}				30	V
temperature coefficient	$\Delta V_{OUT}/\Delta T_A$	V_{IN}=5V, I_{OUT}=10mA, 0°C≤T_A≤70°C		±0.45		mV/°C

8.2Electrical properties (7133, T_{OPT}=25°C)

Parameter	Symbol	Conditions	Min	Typ	Max	Units
Output voltage	V_{OUT}	V_{IN}=5.5V, I_{OUT}=10mA	3.201	3.3	3.399	V
Output current	I_{OUT}	V_{IN}=5.5V	60	100		mA
Load regulation	ΔV_{OUT}	V_{IN}=5.5V, 1mA≤I_{OUT}≤30mA		100	150	mV
Drop voltage	V_{DIF}	I_{OUT}=1mA		100		mV
Quiescent current	I_{SS}	V_{IN}=5.5V, no load		2	3	μA
Line Regulation	$\Delta V_{OUT}/(\Delta V_{IN}*V_{OUT})$	4.5V≤V_{IN}≤30V, I_{OUT}=1mA		0.2		%/V
input voltage	V_{IN}				30	V
temperature coefficient	$\Delta V_{OUT}/\Delta T_A$	V_{IN}=5.5V,I_{OUT}=10mA,0°C≤T_A≤70°C		±0.5		mV/°C

8.3Electrical properties (7136, T_{OPT}=25°C)

Parameter	Symbol	Conditions	Min	Typ	Max	Units
Output voltage	V_{OUT}	V_{IN}=5.6V, I_{OUT}=10mA	3.492	3.6	3.708	V
Output current	I_{OUT}	V_{IN}=5.6V	60	100		mA
Load regulation	ΔV_{OUT}	V_{IN}=5.6V, 1mA≤I_{OUT}≤20mA		100	150	mV
Drop voltage	V_{DIF}	I_{OUT}=1mA		100		mV
Quiescent current	I_{SS}	V_{IN}= 5.6V, no load		2	3	μA
Line Regulation	$\Delta V_{OUT}/(\Delta V_{IN}*V_{OUT})$	4.6V≤V_{IN}≤30V, I_{OUT}=1mA		0.2		%/V
input voltage	V_{IN}				30	V
temperature coefficient	$\Delta V_{OUT}/\Delta T_A$	V_{IN}=5.6V, I_{OUT}=10mA, 0°C≤T_A≤70°C		±0.6		mV/°C

8.4Electrical properties (7140, T_{OPT}=25°C)

Parameter	Symbol	Conditions	Min	Typ	Max	Units
Output voltage	V_{OUT}	V_{IN}=6V, I_{OUT}=10mA	3.88	4	4.12	V
Output current	I_{OUT}	V_{IN}=6V	60	100		mA
Load regulation	ΔV_{OUT}	V_{IN}=6V, 1mA≤I_{OUT}≤30mA		100	150	mV
Drop voltage	V_{DIF}	I_{OUT}=1mA		100		mV
Quiescent current	I_{SS}	V_{IN}=6V, no load		2	3	μA
Line Regulation	$\Delta V_{OUT}/(\Delta V_{IN}*V_{OUT})$	5V≤V_{IN}≤30V, I_{OUT}=1mA		0.2		%/V
input voltage	V_{IN}				30	V
temperature coefficient	$\Delta V_{OUT}/\Delta T_A$	V_{IN}=6V,I_{OUT}=10mA,0°C≤T_A≤70°C		±0.7		mV/°C

8.5Electrical properties (7144, T_{OPT}=25°C)

Parameter	Symbol	Conditions	Min	Typ	Max	Units
Output voltage	V_{OUT}	V_{IN}=6.4V, I_{OUT}=10mA	4.268	4.4	4.532	V
Output current	I_{OUT}	V_{IN}=6.4V	60	100		mA
Load regulation	ΔV_{OUT}	V_{IN}=6.4V, 1mA≤I_{OUT}≤20mA		100	150	mV
Drop voltage	V_{DIF}	I_{OUT}=1mA		100		mV
Quiescent current	I_{SS}	V_{IN}=6.4V, no load		2	3	μA
Line Regulation	$\Delta V_{OUT}/(\Delta V_{IN}*V_{OUT})$	5.4V≤V_{IN}≤30V, I_{OUT}=1mA		0.2		%/V
input voltage	V_{IN}				30	V
temperature coefficient	$\Delta V_{OUT}/\Delta T_A$	V_{IN}=6.4V, I_{OUT}=10mA, 0°C≤T_A≤70°C		±0.7		mV/°C

8.6Electrical properties (7150, T_{OPT}=25°C)

Parameter	Symbol	Conditions	Min	Typ	Max	Units
Output voltage	V_{OUT}	V_{IN}=7V, I_{OUT}=10mA	4.85	5	5.15	V
Output current	I_{OUT}	V_{IN}=7V	60	100		mA
Load regulation	ΔV_{OUT}	V_{IN}=7V, 1mA≤I_{OUT}≤30mA		100		mV
Drop voltage	V_{DIF}	I_{OUT}=1mA		100		mV
Quiescent current	I_{SS}	V_{IN}=7V, no load		2	3	μA
Line Regulation	$\Delta V_{OUT}/(\Delta V_{IN}*V_{OUT})$	6V≤V_{IN}≤30V, I_{OUT}=1mA		0.2		%/V
input voltage	V_{IN}				30	V
temperature coefficient	$\Delta V_{OUT}/\Delta T_A$	V_{IN}=7V,I_{OUT}=10mA,0°C≤T_A≤70°C		±0.75		mV/°C

9.Application circuit

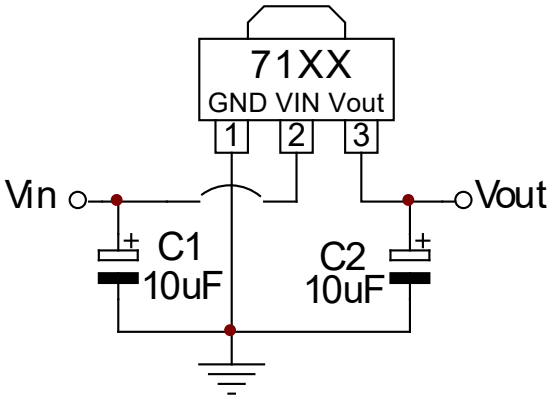

1. Basic circuit

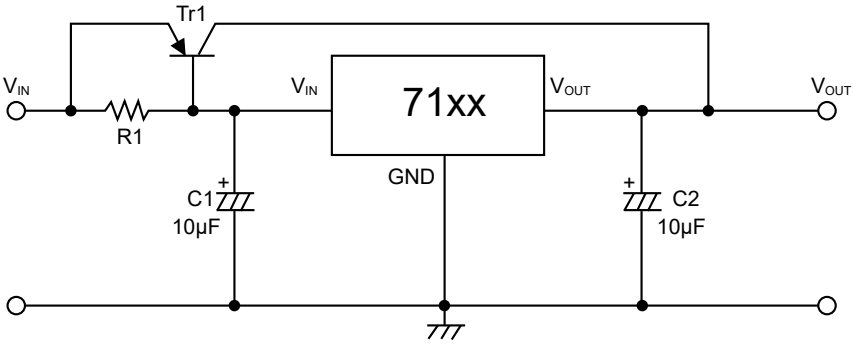

2. High output current regulator

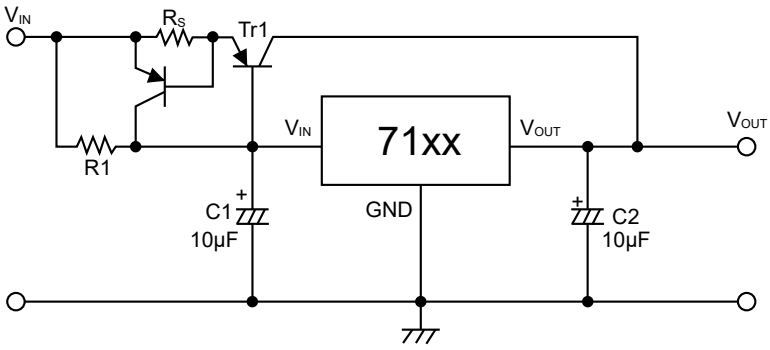

3. Short circuit protection circuit

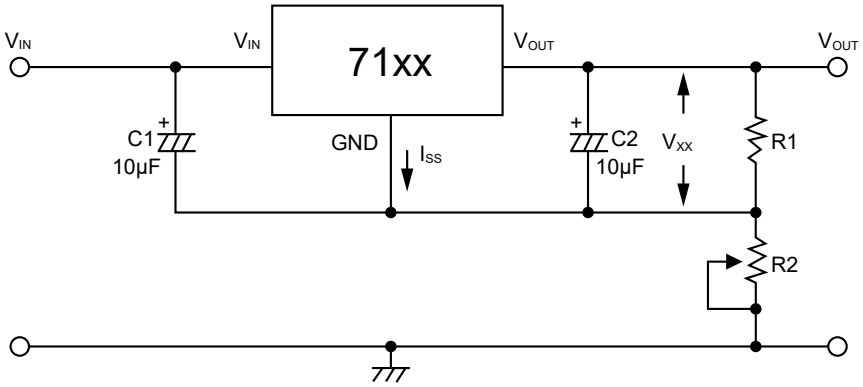

4. Circuit for increasing output voltage (1)

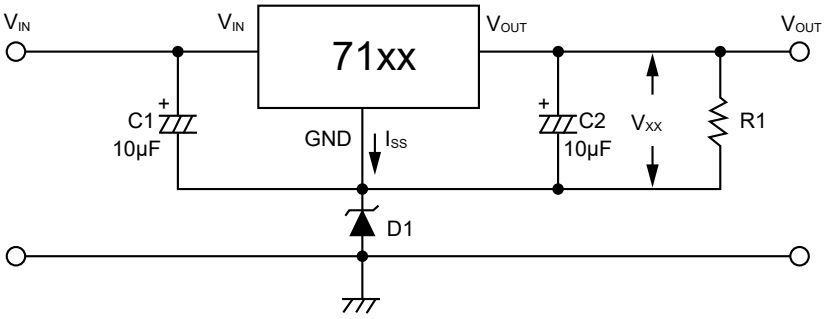

5. Circuit for increasing output voltage (2)

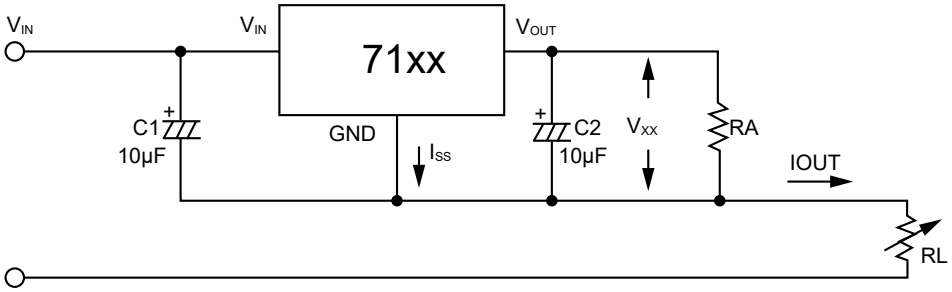

6. Current regulating circuit

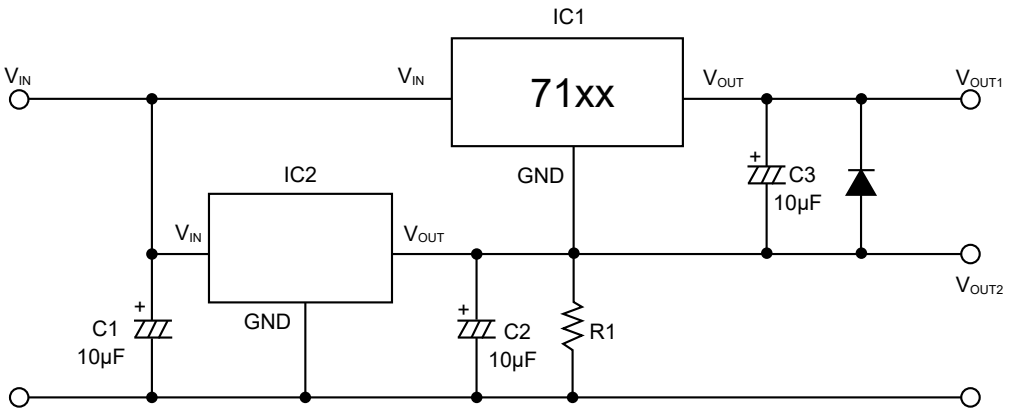

7. Dual output circuit

Notes: “××”Represents the output voltage.

10.1 TO-92 Package Outline Dimensions

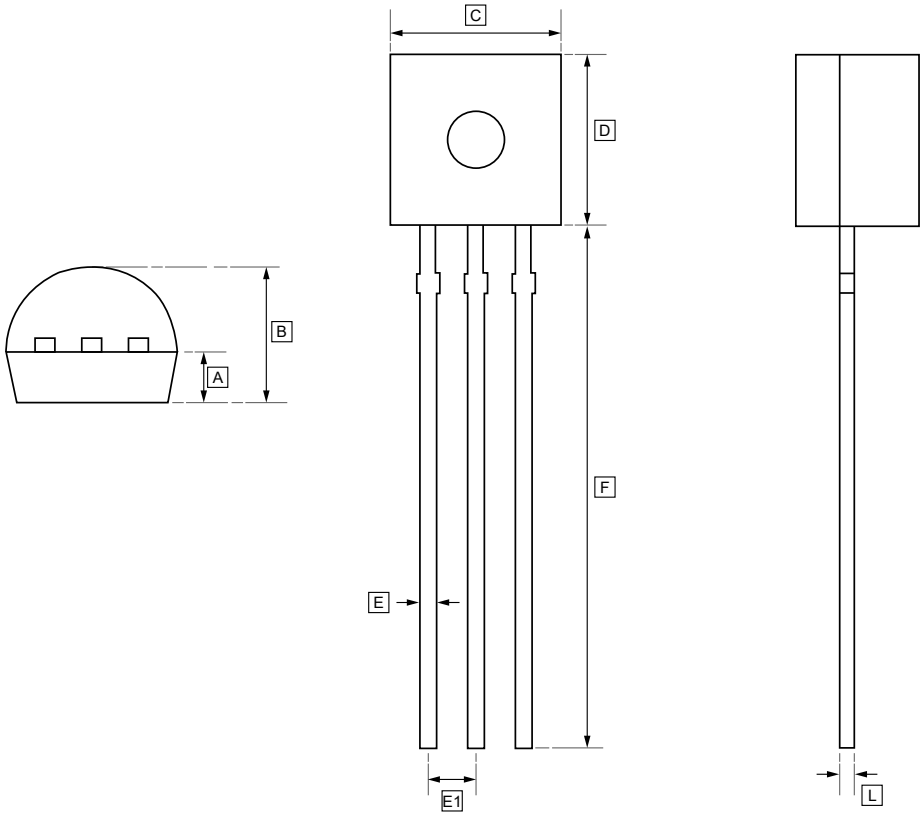

DIMENSIONS (mm are the original dimensions)

Symbol	A	B	C	D	E	E1	F	L
Min	1.10	3.50	4.50	4.40	0.35	1.27	13.50	0.35
Max	1.30	3.90	4.90	4.90	0.45	TYP	14.50	0.40

10.2 SOT-89-3 Package Outline Dimensions

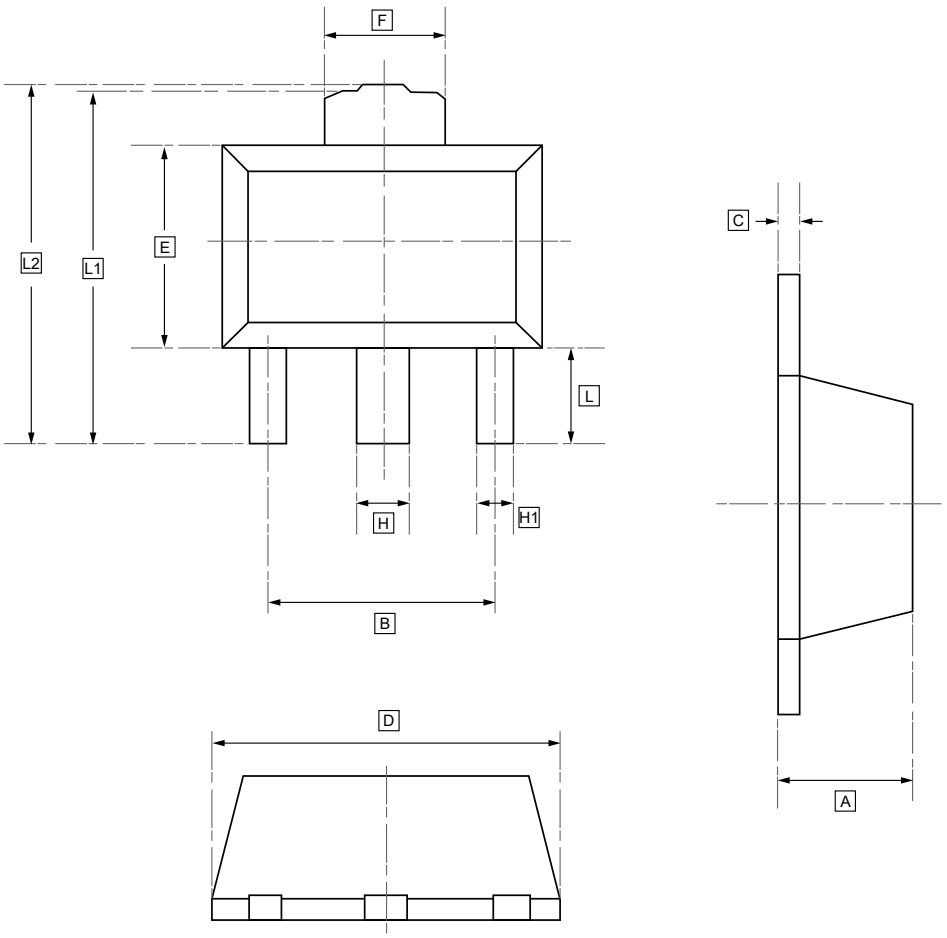

DIMENSIONS (mm are the original dimensions)

Symbol	A	B	C	D	E	F	H	H1	L	L1	L2
Min	1.450	2.950	0.330	4.450	2.450	1.650	0.450	0.370	0.900	4.100	4.100
Max	1.550	3.050	0.430	4.550	2.550	1.750	0.580	0.480	1.000	4.300	4.350

10.3 SOT-23 Package Outline Dimensions

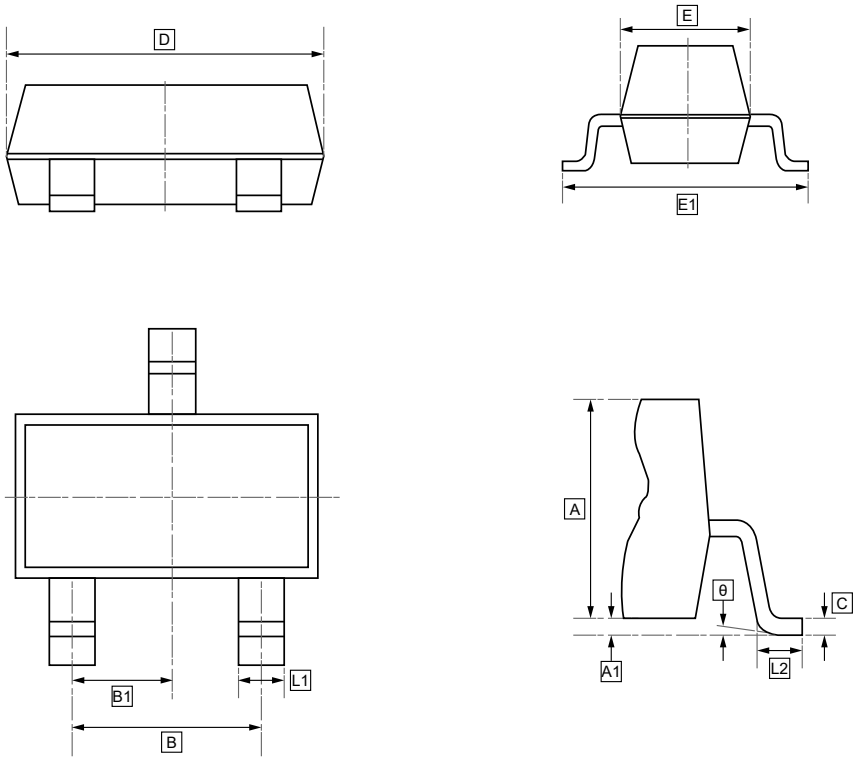

DIMENSIONS (mm are the original dimensions)

Symbol	A	A1	L1	L2	C	D	E	E1	B	B1	θ
Min	0.900	0.020	0.300	0.300	0.100	2.800	1.200	2.300	1.800	0.950	0°
Max	1.100	0.100	0.500	0.500	0.120	3.000	1.400	2.500	2.000	TYP	8°

10.4 SOT-23-5 Package Outline Dimensions

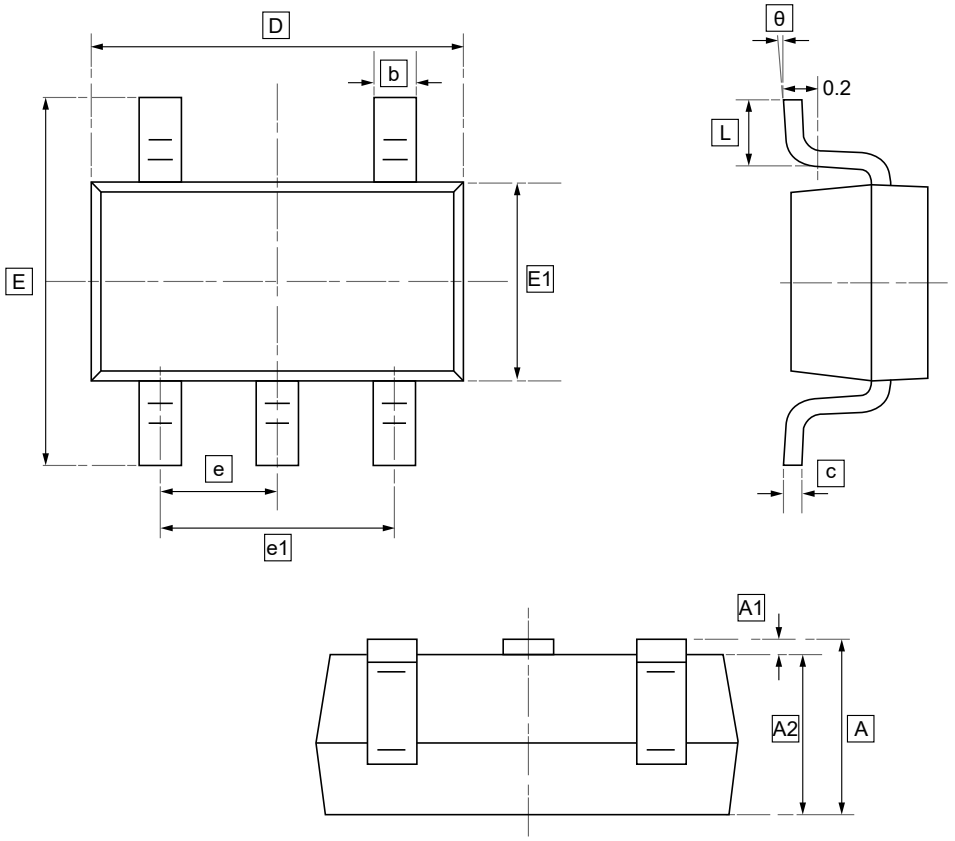

DIMENSIONS (mm are the original dimensions)

Symbol	A	A1	A2	b	c	D	E1	E	e	e1	L	θ
Min	1.050	0.000	1.050	0.300	0.100	2.820	1.500	2.650	0.950	1.800	0.300	0°
Max	1.250	0.100	1.150	0.500	0.200	3.020	1.700	2.950	BSC	2.000	0.600	8°

11.Ordering Information

SOT-89

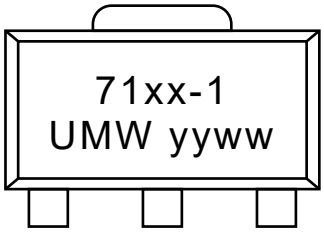

SOT-23

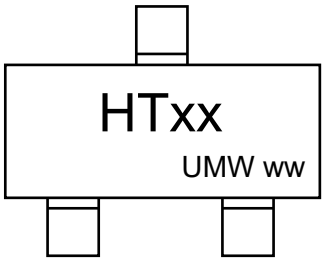

TO-92

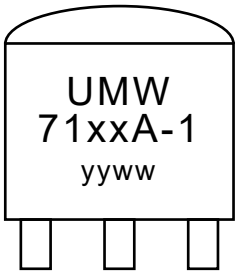

SOT23-5

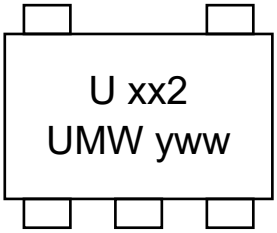

yy: Year Code
ww: Week Code

Order Code	Marking	Package	Base QTY	Delivery Mode
UMW HT71xx-1	71xx-1	SOT-89	1000	Tape and reel
UMW HT71xxS	HTxx	SOT-23	3000	Tape and reel
UMW HT71xxA-1	71xxA-1	TO-92	1000	Tape and reel
UMW HT71xxS-1	U xx2	SOT23-5	3000	Tape and reel

12.Disclaimer

UMW reserves the right to make changes to all products, specifications. Customers should obtain the latest version of product documentation and verify the completeness and currency of the information before placing an order.

When applying our products, please do not exceed the maximum rated values, as this may affect the reliability of the entire system. Under certain conditions, any semiconductor product may experience faults or failures. Buyers are responsible for adhering to safety standards and implementing safety measures during system design, prototyping, and manufacturing when using our products to prevent potential failure risks that could lead to personal injury or property damage.

Unless explicitly stated in writing, UMW products are not intended for use in medical, life-saving, or life-sustaining applications, nor for any other applications where product failure could result in personal injury or death. If customers use or sell the product for such applications without explicit authorization, they assume all associated risks.

When reselling, applying, or exporting, please comply with export control laws and regulations of China, the United States, the United Kingdom, the European Union, and other relevant countries, regions, and international organizations.

This document and any actions by UMW do not grant any intellectual property rights, whether express or implied, by estoppel or otherwise. The product names and marks mentioned herein may be trademarks of their respective owners.

ENTEGRECİ

Bu belge www.entegreci.com üzerinden sunulmaktadır.

Elektronik komponent tedarikinde Entegreci

Entegreci, Eskişehir merkezli, Türkiye geneline satış yapan bir elektronik komponent mağazasıdır. Entegreler (IC), mikrodenetleyiciler, transistörler, diyotlar, pasif elemanlar, konnektörler, modüller ve geliştirme kartları tek adetten seri üretim adetlerine kadar satılır. Ürün sayfalarında güncel stok durumunu, fiyatı ve datasheet bağlantısını bulabilirsiniz.

Parça koduyla arama

Üretici parça numarasını yazın; stok ve fiyatı hemen görün.

www.entegreci.com

Ürün kategorileri

Entegreden kapasitöre tüm elektronik komponent kategorileri.

Kategorilere göz atın

Üreticiler

Aradığınız üreticinin ürünlerini tek sayfada inceleyin.

Üreticileri görün

Toplu alım ve teklif

Listede olmayan ya da yüksek adetli parçalar için teklif isteyin.

Teklif isteyin

www.entegreci.com | **destek@entegreci.com** | **0850 305 90 34**

Entegreci is an online electronic components store based in Türkiye. Search by manufacturer part number to see stock, prices and datasheets for integrated circuits, microcontrollers, transistors, passive components and connectors, or request a quote for parts that are not listed.

Bu sayfa Entegreci tarafından eklenmiştir. Belgenin önceki sayfaları asıl yayıncısına aittir ve içeriği değiştirilmemiştir; en güncel sürüm için belgenin yayıncısına başvurun.