50 Amps, 60 Volts
N-CHANNEL POWER MOSFET

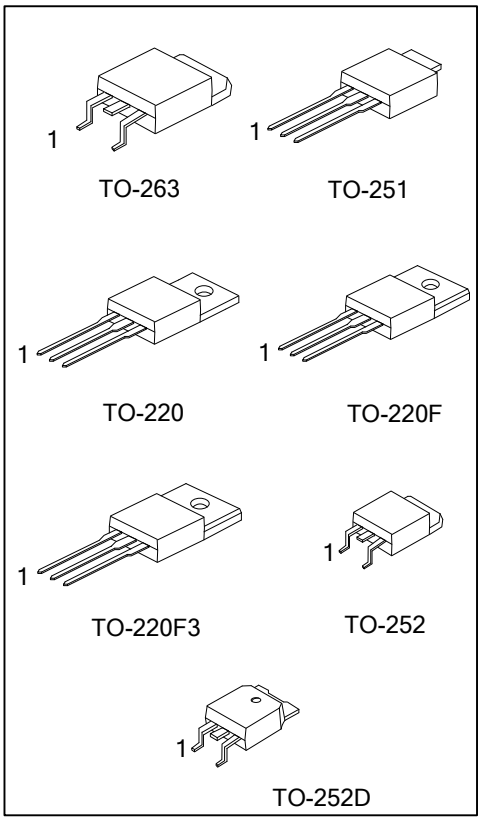

■ DESCRIPTION

The UTC **50N06** is three-terminal silicon device with current conduction capability of about 50A, fast switching speed. Low on-state resistance, breakdown voltage rating of 60V, and max threshold voltages of 4 volt.

It is mainly suitable electronic ballast, and low power switching mode power appliances.

■ FEATURES

* $R_{DS(ON)}$ < 23mΩ @ V_{GS} = 10 V
* Fast switching capability
* 100% avalanche energy specified
* Improved dv/dt capability

■ SYMBOL

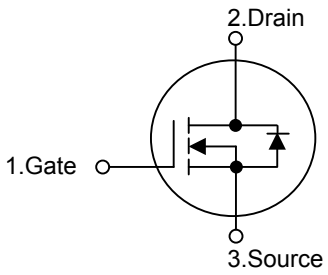

■ ORDERING INFORMATION

Ordering Number		Package	Pin Assignment			Packing
Lead Free	Halogen Free		1	2	3	
50N06L-TA3-T	50N06G-TA3-T	TO-220	G	D	S	Tube
50N06L-TF3-T	50N06G-TF3-T	TO-220F	G	D	S	Tube
50N06L-TF3T-T	50N06G-TF3T-T	TO-220F3	G	D	S	Tube
50N60L-TM3-T	50N60G-TM3-T	TO-251	G	D	S	Tube
50N06L-TN3-R	50N06G-TN3-R	TO-252	G	D	S	Tape Reel
50N06L-TND-R	50N06G-TND-R	TO-252D	G	D	S	Tape Reel
50N06L-TQ2-T	50N06G-TQ2-T	TO-263	G	D	S	Tube
50N06L-TQ2-R	50N06G-TQ2-R	TO-263	G	D	S	Tape Reel

Note: Pin Assignment: G: Gate D: Drain S: Source

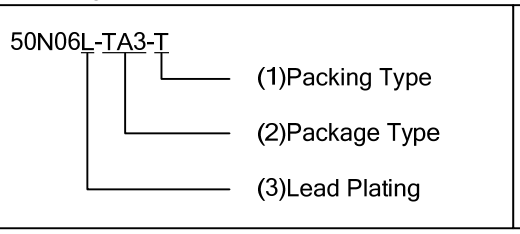

(1) T: Tube, R: Tape Reel
(2) TA3: TO-220, TF3: TO-220F, TF3T: TO-220F3, TM3: TO-251, TN3: TO-252, TND: TO-252D TQ2: TO-263
(3) L: Lead Free, G: Halogen Free

Copyright © 2014 Unisonic Technologies Co., Ltd

■ MARKING INFORMATION

PACKAGE	MARKING
TO-220 TO-220F TO-220F3 TO-251 TO-252 TO-252D TO-263	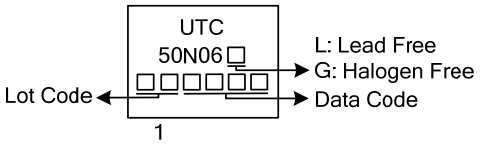

■ ABSOLUTE MAXIMUM RATINGS

PARAMETER		SYMBOL	RATINGS	UNIT
Drain-Source Voltage		V_{DSS}	60	V
Gate-Source Voltage		V_{GSS}	±20	V
Continuous Drain Current	T_C = 25°C	I_D	50	A
	T_C = 100°C		35	A
Pulsed Drain Current (Note 2)		I_{DM}	200	A
Avalanche Energy	Single Pulsed (Note 3)	E_{AS}	480	mJ
	Repetitive (Note 2)	E_{AR}	13	mJ
Peak Diode Recovery dv/dt (Note 4)		dv/dt	7	V/ns
Power Dissipation (T_C=25°C)	TO-220/TO-263	P_D	120	W
	TO-220F/TO-220F3		70	W
	TO-251/TO-252 TO-252D		46	W
Junction Temperature		T_J	+150	°C
Operation and Storage Temperature		T_{STG}	-55 ~ +150	°C

Notes: 1. Absolute maximum ratings are those values beyond which the device could be permanently damaged. Absolute maximum ratings are stress ratings only and functional device operation is not implied.
2. Repetitive Rating: Pulse width limited by T_J
3. L=0.38mH, I_{AS}=50A, V_{DD}= 25V, R_G=20Ω, Starting T_J=25°C
4. I_{SD} ≤50A, di/dt ≤300A/μs, V_{DD} ≤BV_{DSS}, Starting T_J=25°C

■ THERMAL DATA

PARAMETER		SYMBOL	RATING	UNIT
Junction to Ambient	TO-220/TO-220F TO-220F3/TO-263	θ_{JA}	62	°C/W
	TO-251/TO-252 TO-252D		100	°C/W
Junction to Case	TO-220	θ_{JC}	1.24	°C/W
	TO-220F/TO-220F3		1.78	°C/W
	TO-251/TO-252 TO-252D		2.7	°C/W
	TO-263		1.24	°C/W

■ ELECTRICAL CHARACTERISTICS (T_C = 25°C, unless otherwise specified)

PARAMETER		SYMBOL	TEST CONDITIONS	MIN	TYP	MAX	UNIT
OFF CHARACTERISTICS							
Drain-Source Breakdown Voltage		BV_{DSS}	V_{GS} = 0 V, I_D = 250 μA	60			V
Drain-Source Leakage Current		I_{DSS}	V_{DS} = 60 V, V_{GS} = 0 V			10	μA
Gate-Source Leakage Current	Forward	I_{GSS}	V_{GS} = 20V, V_{DS} = 0 V			100	nA
	Reverse		V_{GS} = -20V, V_{DS} = 0 V			-100	nA
Breakdown Voltage Temperature Coefficient		$\triangle BV_{DSS}/\triangle T_J$	I_D = 250 μA, Referenced to 25°C		0.07		V/°C
ON CHARACTERISTICS							
Gate Threshold Voltage		$V_{GS(TH)}$	V_{DS} = V_{GS}, I_D = 250 μA	2.0		4.0	V
Static Drain-Source On-State Resistance		$R_{DS(ON)}$	V_{GS} = 10 V, I_D = 25 A		18	23	mΩ
DYNAMIC CHARACTERISTICS							
Input Capacitance		C_{ISS}	V_{GS} = 0 V, V_{DS} = 25 V, f = 1MHz		900	1220	pF
Output Capacitance		C_{OSS}			430	550	pF
Reverse Transfer Capacitance		C_{RSS}			80	100	pF
SWITCHING CHARACTERISTICS							
Turn-On Delay Time		$t_{D(ON)}$	V_{DD} = 30V, I_D =0.5 A, R_G = 25Ω (Note 1, 2)		60	80	ns
Turn-On Rise Time		t_R			180	220	ns
Turn-Off Delay Time		$t_{D(OFF)}$			300	350	ns
Turn-Off Fall Time		t_F			200	250	ns
Total Gate Charge		Q_G	V_{DS} = 50V, V_{GS} = 10 V, I_D = 1.3A (Note 1, 2)		60	80	nC
Gate-Source Charge		Q_{GS}			9		nC
Gate-Drain Charge		Q_{GD}			20		nC
DRAIN-SOURCE DIODE CHARACTERISTICS AND MAXIMUM RATINGS							
Drain-Source Diode Forward Voltage		V_{SD}	I_S = 50A, V_{GS} = 0 V			1.5	V
Maximum Continuous Drain-Source Diode Forward Current		I_S				50	A
Maximum Pulsed Drain-Source Diode Forward Current		I_{SM}				200	A
Reverse Recovery Time		t_{RR}	I_S = 50A, V_{GS} = 0 V, dI_F / dt = 100 A/μs		54		ns
Reverse Recovery Charge		Q_{RR}			81		μC

Notes: 1. Pulse Test: Pulse width ≤ 300μs, Duty cycle ≤ 2%
2. Essentially independent of operating temperature

■ TEST CIRCUITS AND WAVEFORMS

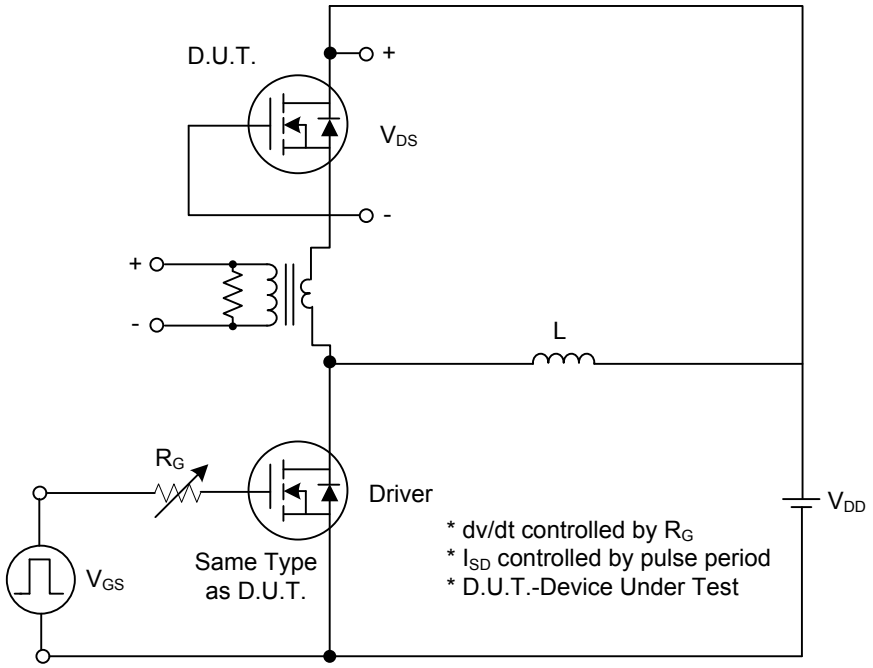

Fig. 1A Peak Diode Recovery dv/dt Test Circuit

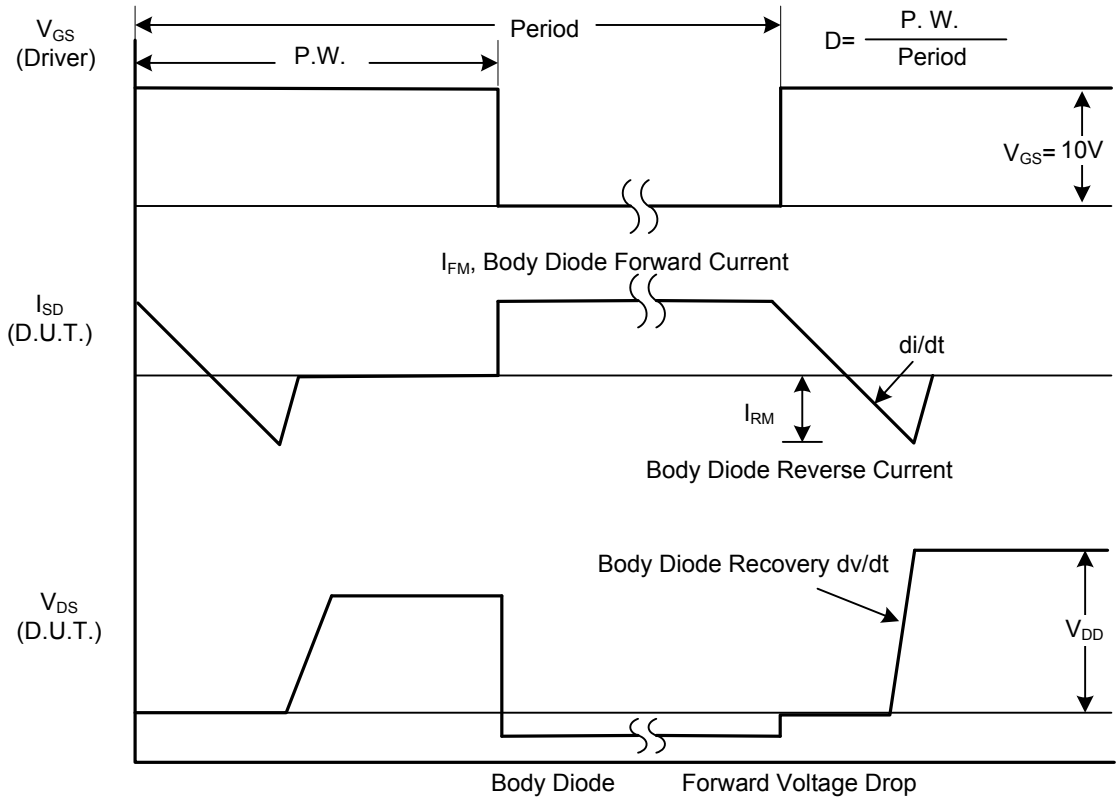

Fig. 1B Peak Diode Recovery dv/dt Waveforms

■ TEST CIRCUITS AND WAVEFORMS (Cont.)

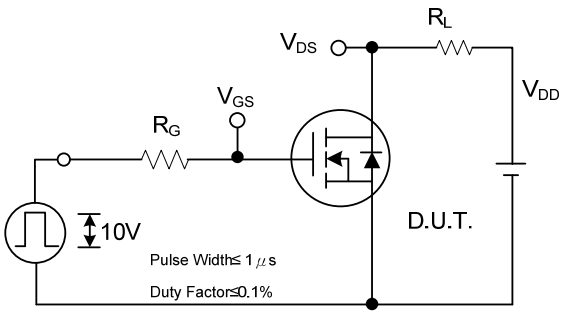

Fig. 2A Switching Test Circuit

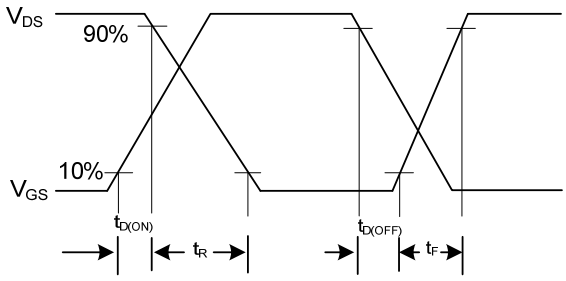

Fig. 2B Switching Waveforms

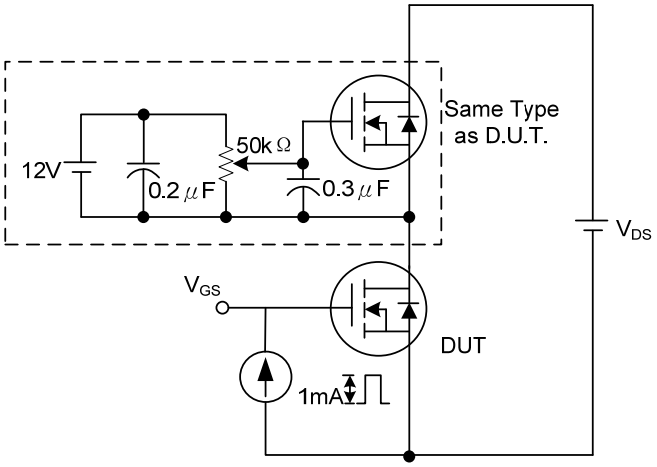

Fig. 3A Gate Charge Test Circuit

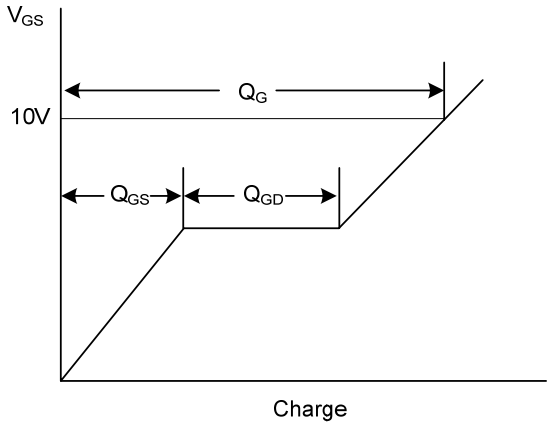

Fig. 3B Gate Charge Waveform

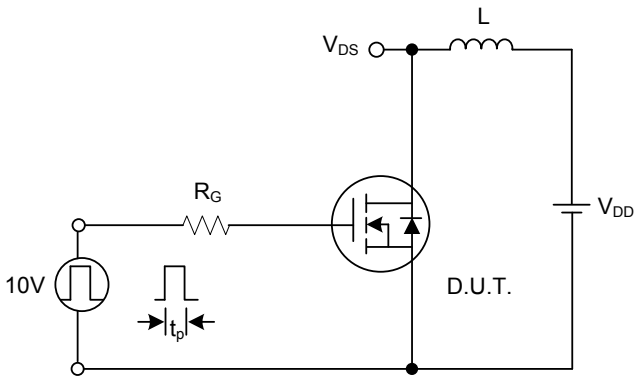

Fig. 4A Unclamped Inductive Switching Test Circuit

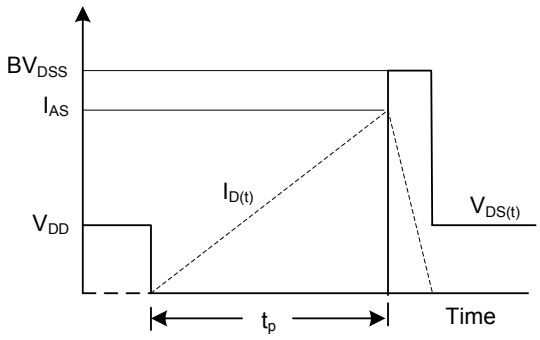

Fig. 4B Unclamped Inductive Switching Waveforms

■ TYPICAL CHARACTERISTICS

On-State Characteristics

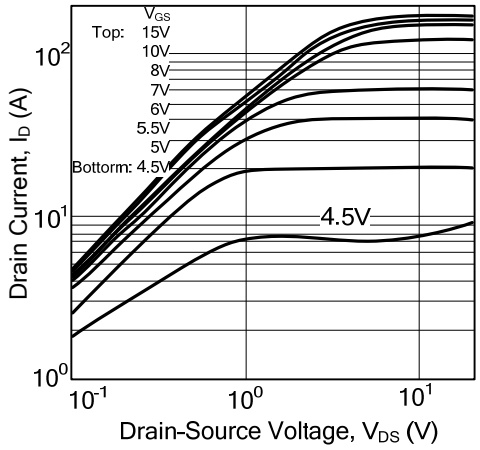

Transfer Characteristics

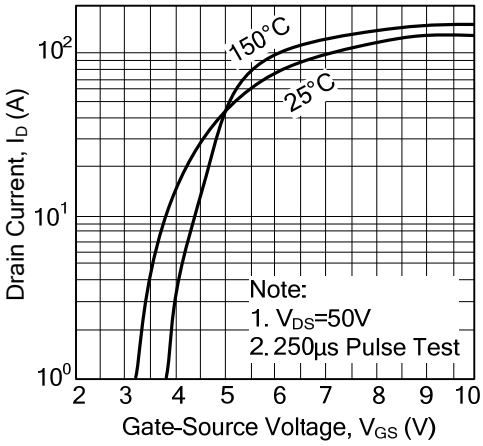

On-Resistance Variation vs. Drain Current and Gate Voltage

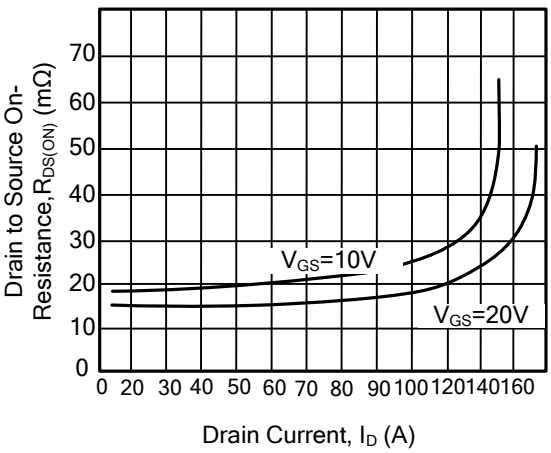

On State Current vs. Allowable Case Temperature

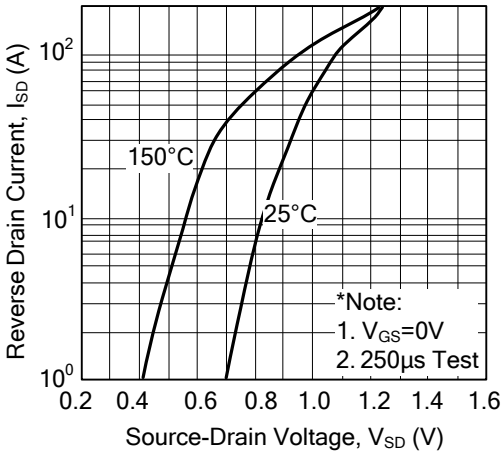

Capacitance Characteristics (Non-Repetitive)

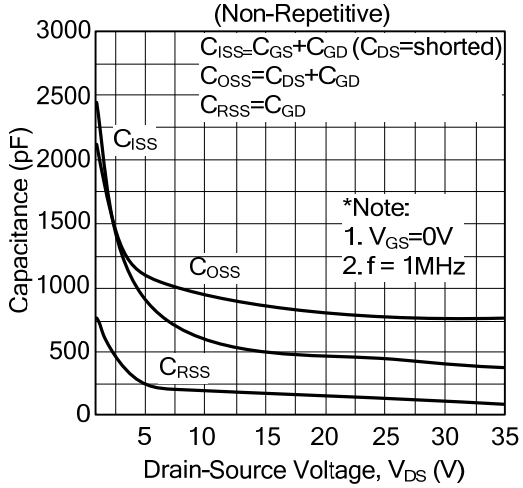

Gate Charge Characteristics

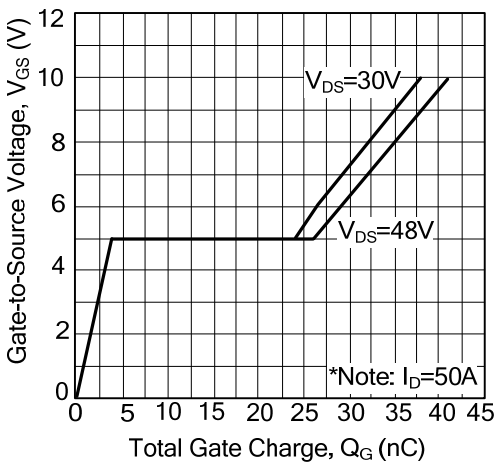

■ TYPICAL CHARACTERISTICS(Cont.)

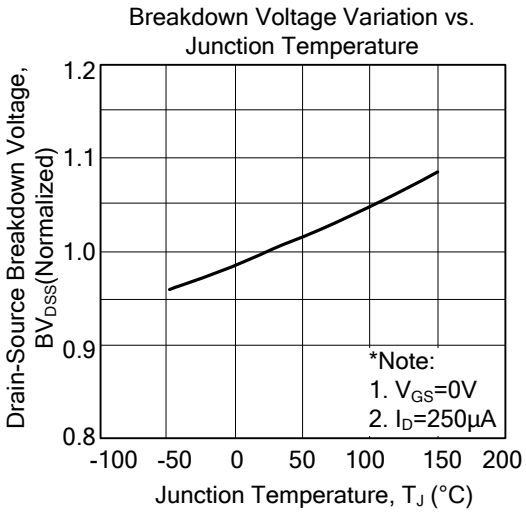

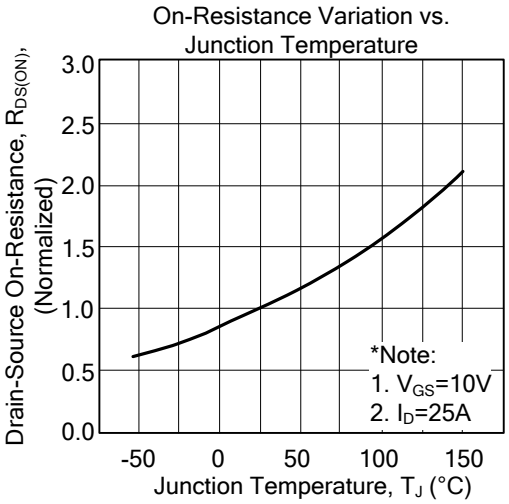

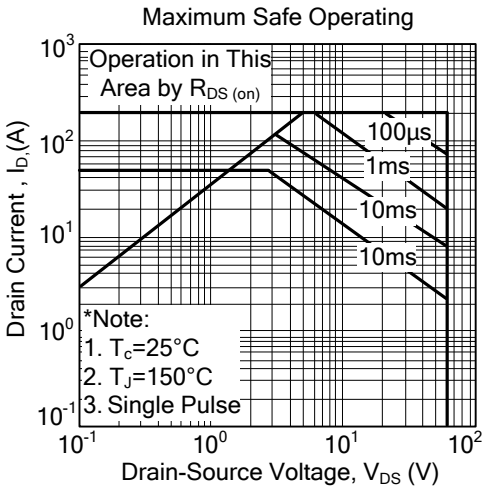

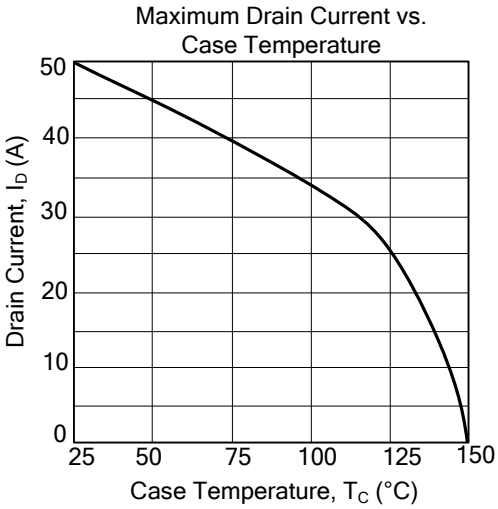

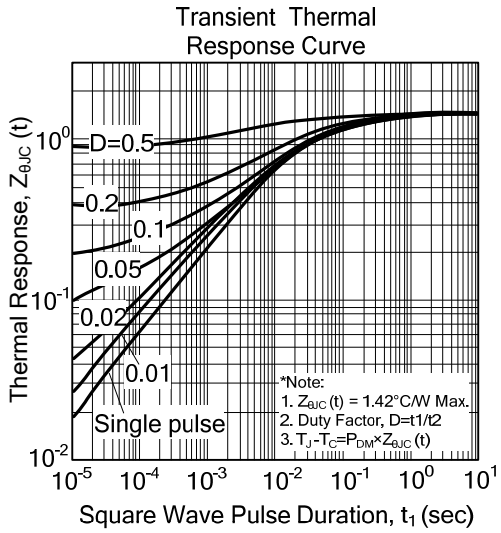

UTC assumes no responsibility for equipment failures that result from using products at values that exceed, even momentarily, rated values (such as maximum ratings, operating condition ranges, or other parameters) listed in products specifications of any and all UTC products described or contained herein. UTC products are not designed for use in life support appliances, devices or systems where malfunction of these products can be reasonably expected to result in personal injury. Reproduction in whole or in part is prohibited without the prior written consent of the copyright owner. The information presented in this document does not form part of any quotation or contract, is believed to be accurate and reliable and may be changed without notice.

ENTEGRECİ

Bu belge www.entegreci.com üzerinden sunulmaktadır.

Elektronik komponent tedarikinde Entegreci

Entegreci, Eskişehir merkezli, Türkiye geneline satış yapan bir elektronik komponent mağazasıdır. Entegreler (IC), mikrodenetleyiciler, transistörler, diyotlar, pasif elemanlar, konnektörler, modüller ve geliştirme kartları tek adetten seri üretim adetlerine kadar satılır. Ürün sayfalarında güncel stok durumunu, fiyatı ve datasheet bağlantısını bulabilirsiniz.

Parça koduyla arama

Üretici parça numarasını yazın; stok ve fiyatı hemen görün.

www.entegreci.com

Ürün kategorileri

Entegreden kapasitöre tüm elektronik komponent kategorileri.

Kategorilere göz atın

Üreticiler

Aradığınız üreticinin ürünlerini tek sayfada inceleyin.

Üreticileri görün

Toplu alım ve teklif

Listede olmayan ya da yüksek adetli parçalar için teklif isteyin.

Teklif isteyin

www.entegreci.com | **destek@entegreci.com** | **0850 305 90 34**

Entegreci is an online electronic components store based in Türkiye. Search by manufacturer part number to see stock, prices and datasheets for integrated circuits, microcontrollers, transistors, passive components and connectors, or request a quote for parts that are not listed.

Bu sayfa Entegreci tarafından eklenmiştir. Belgenin önceki sayfaları asıl yayıncısına aittir ve içeriği değiştirilmemiştir; en güncel sürüm için belgenin yayıncısına başvurun.