4N80-FC

Power MOSFET

4A, 800V N-CHANNEL POWER MOSFET

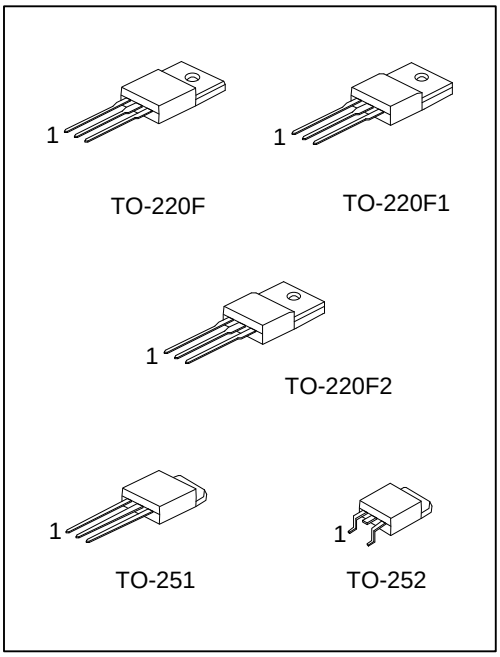

■ DESCRIPTION

The UTC **4N80-FC** provide excellent $R_{DS(ON)}$, low gate charge and operation with low gate voltages. This device is suitable for use as a load switch or in PWM applications.

■ FEATURES0

* $R_{DS(ON)} \leq 3.7\ \Omega$ @ V_{GS}=10V, I_D=2.0A
* Low Reverse Transfer Capacitance
* Fast Switching Capability
* Avalanche Energy Specified
* Improved dv/dt Capability, High Ruggedness

■ SYMBOL

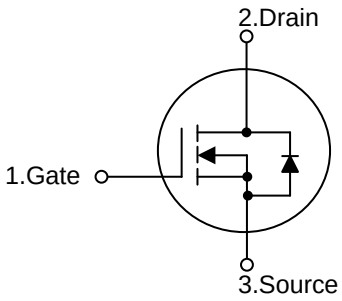

■ ORDERING INFORMATION

Ordering Number		Package	Pin Assignment			Packing
Lead Free	Halogen Free		1	2	3	
4N80L-TF1-T	4N80G-TF1-T	TO-220F1	G	D	S	Tube
4N80L-TF2-T	4N80G-TF2-T	TO-220F2	G	D	S	Tube
4N80L-TF3-T	4N80G-TF3-T	TO-220F	G	D	S	Tube
4N80L-TM3-T	4N80G-TM3-T	TO-251	G	D	S	Tube
4N80L-TN3-R	4N80G-TN3-R	TO-252	G	D	S	Tape Reel

Note: Pin Assignment: G: Gate D: Drain S: Source

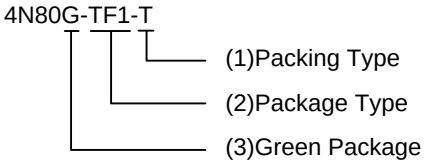

(1) T: Tube, R: Tape Reel
(2) TF3: TO-220F, TF1: TO-220F1, TF2: TO-220F2
TM3: TO-251, TN3: TO-252
(3) G: Halogen Free and Lead Free, L: Lead Free

■ MARKING

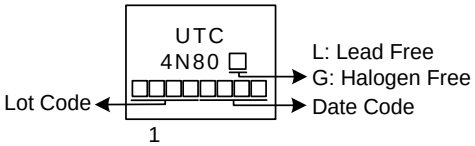

Copyright © 2020 Unisonic Technologies Co., Ltd

■ ABSOLUTE MAXIMUM RATINGS (T_C=25°C, unless otherwise specified)

PARAMETER		SYMBOL	RATINGS	UNIT
Drain-Source Voltage		V_{DSS}	800	V
Gate-Source Voltage		V_{GSS}	±30	V
Drain Current	Continuous	I_D	4	A
	Pulsed (Note 2)	I_{DM}	8	A
Avalanche Energy	Single Pulsed (Note 3)	E_{AS}	132	mJ
Peak Diode Recovery dv/dt (Note 4)		dv/dt	2.45	V/ns
Power Dissipation	TO-220F/TO-220F1 TO-220F2	P_D	28	W
	TO-251/TO-252		47	W
Junction Temperature		T_J	+150	°C
Storage Temperature		T_{STG}	-55 ~ +150	°C

Notes: 1. Absolute maximum ratings are those values beyond which the device could be permanently damaged. Absolute maximum ratings are stress ratings only and functional device operation is not implied.
2. Repetitive Rating : Pulse width limited by maximum junction temperature.
3. L=30mH, I_{AS}=4.0A, V_{DD}=25V, R_G=25Ω, Starting T_J = 25°C
4. I_{SD}≤4.0A, di/dt≤200A/μs, V_{DD} ≤ BV_{DSS}, Starting T_J = 25°C

■ THERMAL DATA

PARAMETER		SYMBOL	RATING	UNIT
Junction to Ambient	TO-220F/TO-220F1 TO-220F2	θ_{JA}	62.5	°C/W
	TO-251/TO-252		110	°C/W
Junction to Case	TO-220F/TO-220F1 TO-220F2	θ_{JC}	4.46	°C/W
	TO-251/TO-252		2.65 (Note)	°C/W

Note: Device mounted on FR-4 substrate PC board, 2oz copper, with 1inch square copper plate.

■ ELECTRICAL CHARACTERISTICS (T_J =25°C, unless otherwise specified)

PARAMETER	SYMBOL	TEST CONDITIONS	MIN	TYP	MAX	UNIT
OFF CHARACTERISTICS						
Drain-Source Breakdown Voltage	BV_{DSS}	V_{GS}=0V, I_D=250μA	800			V
Drain-Source Leakage Current	I_{DSS}	V_{DS}=800V, V_{GS}=0V			10	μA
Gate-Source Leakage Current	I_{GSS}	V_{GS}=±30V, V_{DS}=0V			±100	nA
ON CHARACTERISTICS						
Gate Threshold Voltage	$V_{GS(TH)}$	V_{DS}=V_{GS}, I_D=250μA	3.0		5.0	V
Static Drain-Source On-State Resistance	$R_{DS(ON)}$	V_{GS}=10V, I_D=2.0A			3.7	Ω
DYNAMIC CHARACTERISTICS						
Input Capacitance	C_{ISS}	V_{DS}=25V, V_{GS}=0V, f=1MHz		600		pF
Output Capacitance	C_{OSS}			62		pF
Reverse Transfer Capacitance	C_{RSS}			2		pF
SWITCHING CHARACTERISTICS						
Total Gate Charge (Note 1)	Q_G	V_{DS}=640V, V_{GS}=10V, I_D=4A (Note 1, 2)		10		nC
Gate-Source Charge	Q_{GS}			5		nC
Gate-Drain Charge	Q_{GD}			1		nC
Turn-On Delay Time (Note 1)	$t_{D(ON)}$	V_{DD}=100V, V_{GS}=10V, I_D=4A, R_G =25Ω (Note 1, 2)		9.6		ns
Turn-On Rise Time	t_R			15.4		ns
Turn-Off Delay Time	$t_{D(OFF)}$			21.6		ns
Turn-Off Fall Time	t_F			26.5		ns
SOURCE- DRAIN DIODE RATINGS AND CHARACTERISTICS						
Maximum Continuous Drain-Source Diode Forward Current	I_S				4	A
Maximum Pulsed Drain-Source Diode Forward Current	I_{SM}				8	A
Drain-Source Diode Forward Voltage (Note 1)	V_{SD}	I_S=4A, V_{GS}=0V			1.4	V
Body Diode Reverse Recovery Time (Note 1)	t_{rr}	I_S=4A, V_{GS}=0V, dI_F/dt=100A/μs		430		nS
Body Diode Reverse Recovery Charge	Q_{rr}			6.8		μC

Notes: 1. Pulse Test: Pulse width ≤ 300μs, Duty cycle≤2%.
2. Essentially independent of operating temperature.

■ TEST CIRCUITS AND WAVEFORMS

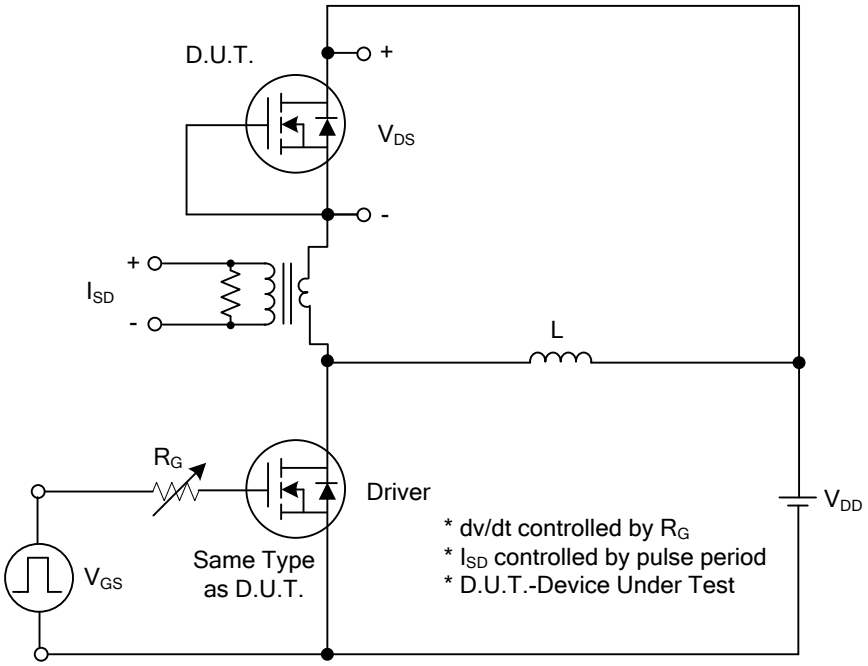

Peak Diode Recovery dv/dt Test Circuit

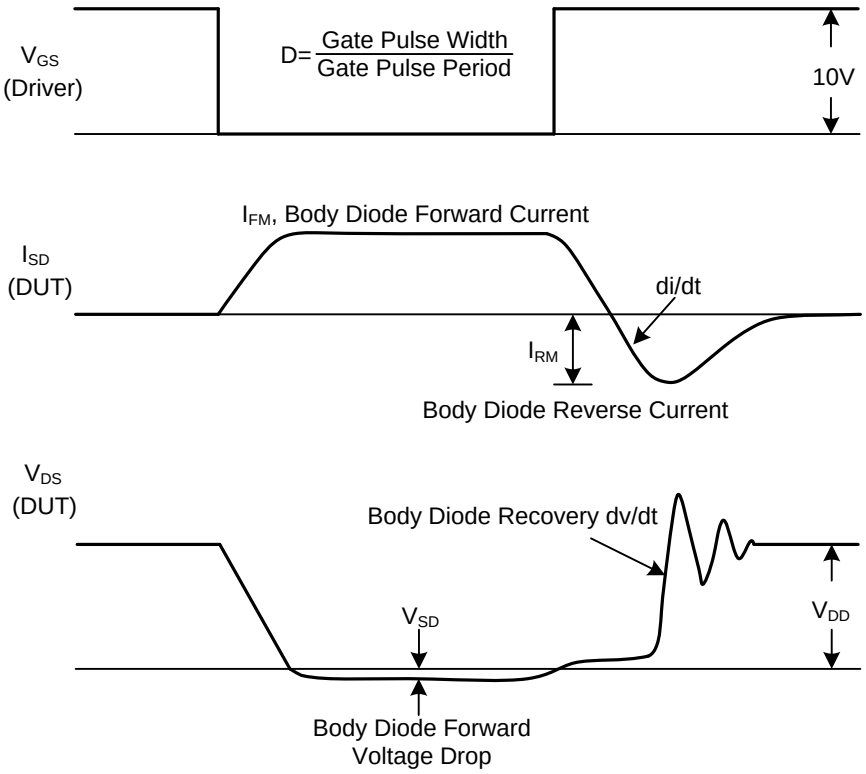

Peak Diode Recovery dv/dt Waveforms

■ TEST CIRCUITS AND WAVEFORMS

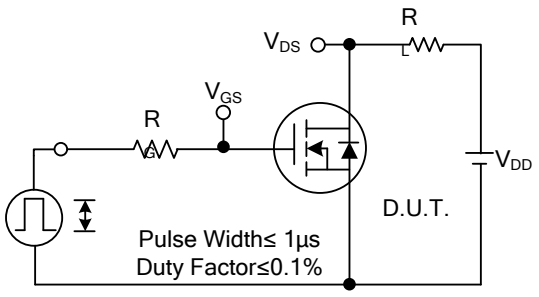

Switching Test Circuit

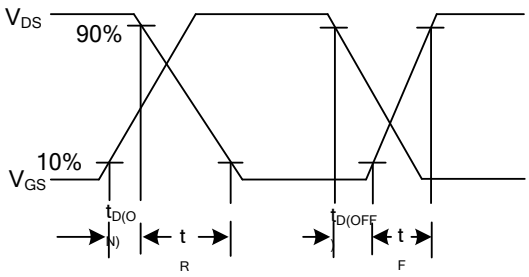

Switching Waveforms

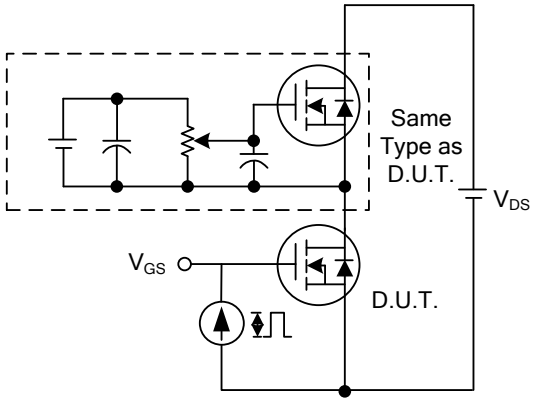

Gate Charge Test Circuit

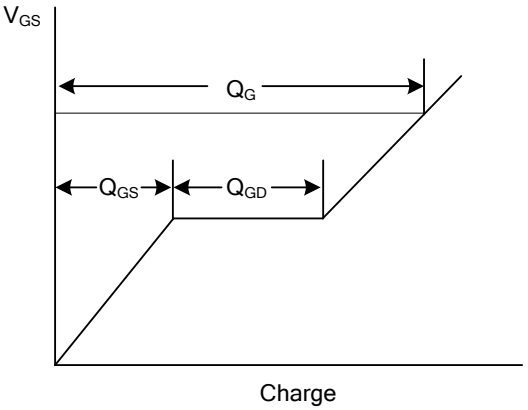

Gate Charge Waveform

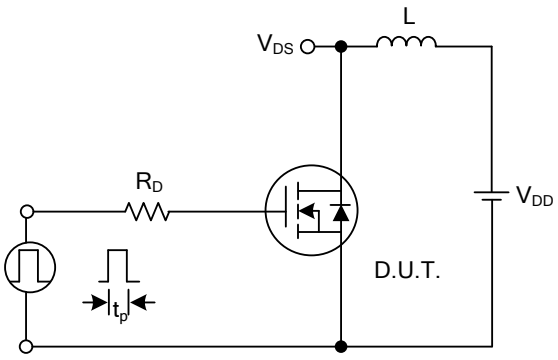

Unclamped Inductive Switching Test Circuit

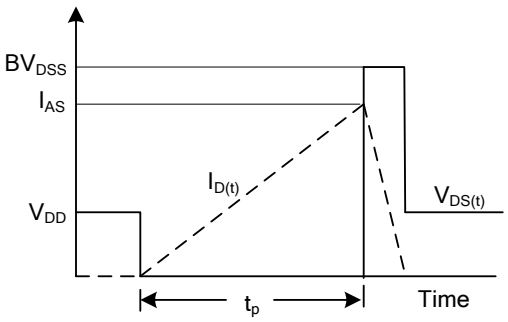

Unclamped Inductive Switching Waveforms

■ TYPICAL CHARACTERISTICS

Drain Current vs. Drain-Source Voltage

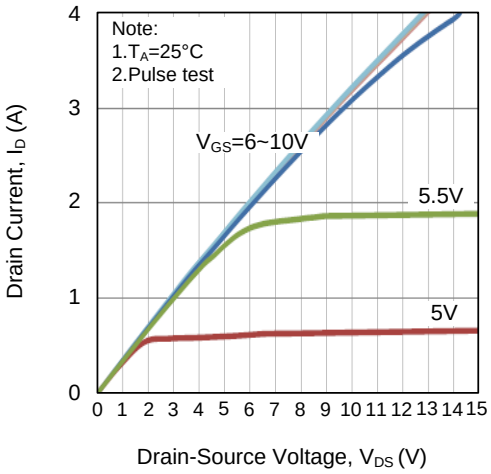

Drain-Source On-Resistance vs. Gate-Source Voltage

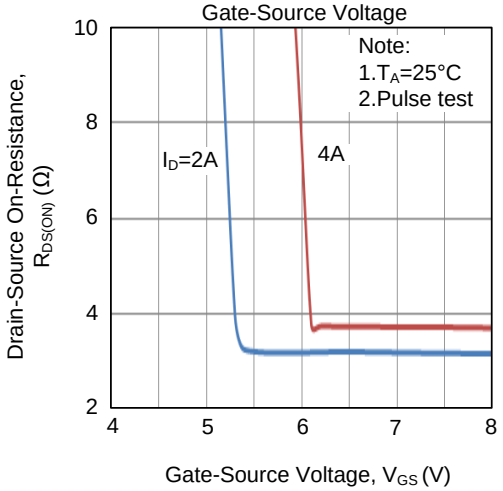

Gate Charge Characteristics

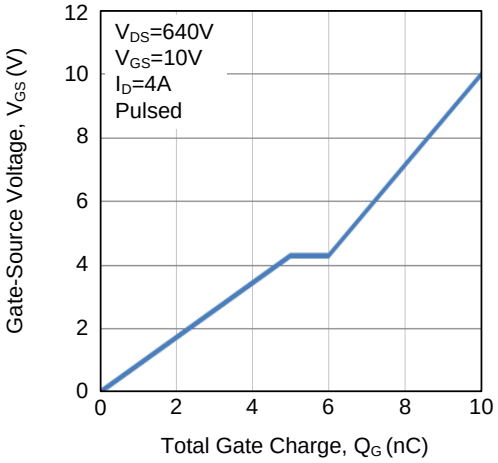

Capacitance Characteristics

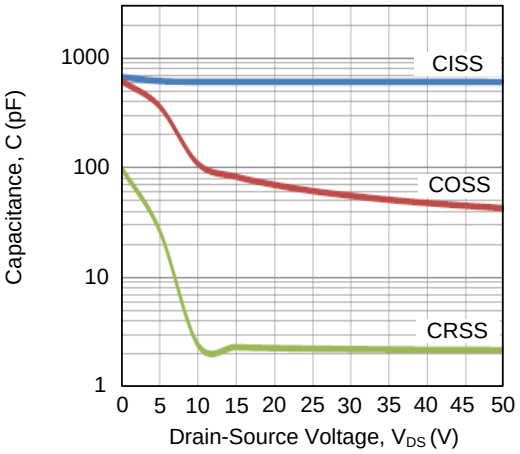

Drain-Source On-Resistance vs. Junction Temperature

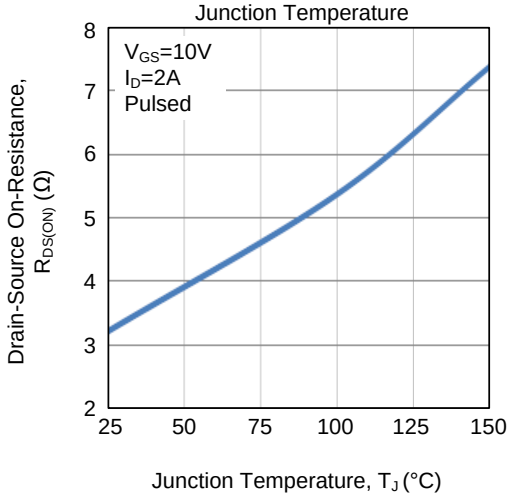

Breakdown Voltage vs. Junction Temperature

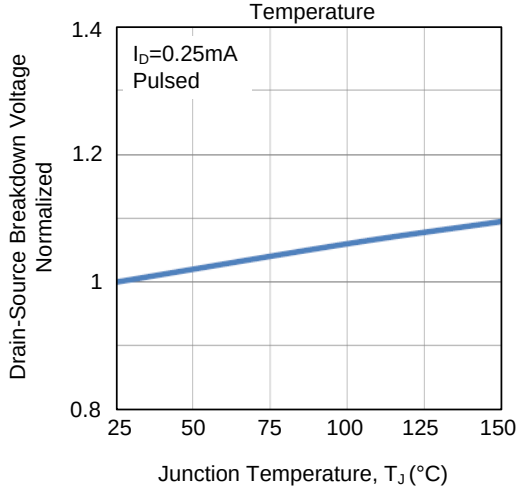

■ TYPICAL CHARACTERISTICS (Cont.)

Gate Threshold Voltage vs. Junction Temperature

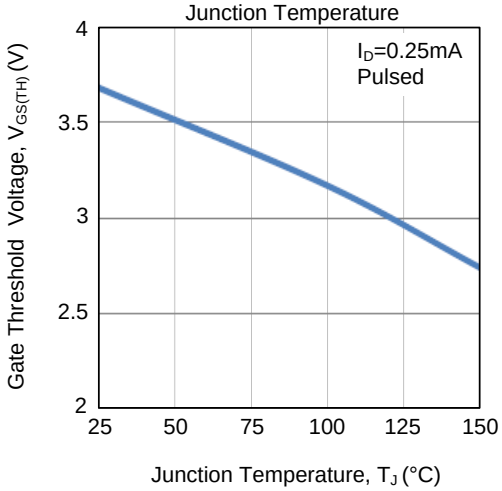

Source Current vs. Source-Drain Voltage

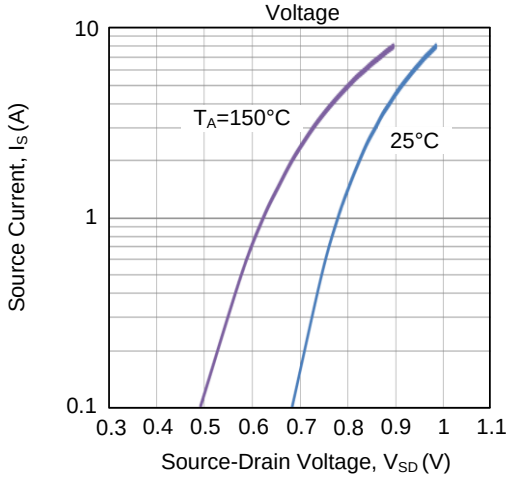

Drain Current vs. Gate-Source Voltage

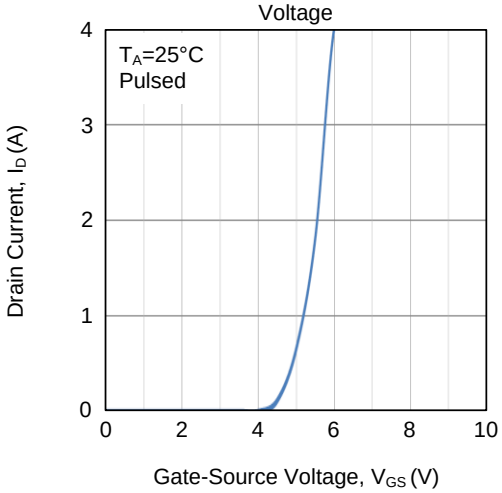

Drain-Source On-Resistance vs. Drain Current

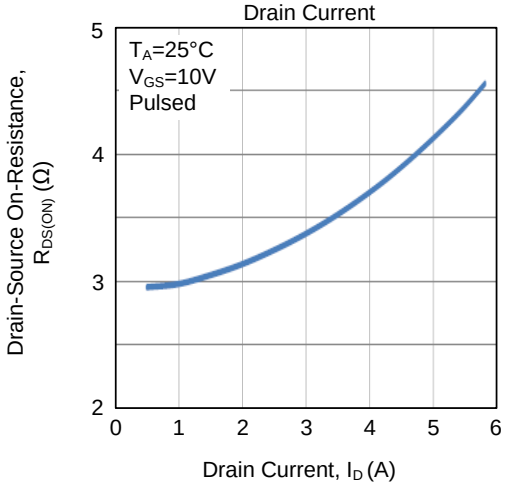

Power Dissipation vs. Junction Temperature

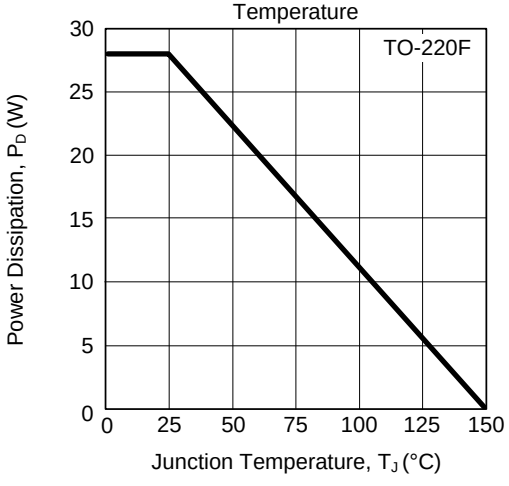

Drain Current vs. Junction Temperature

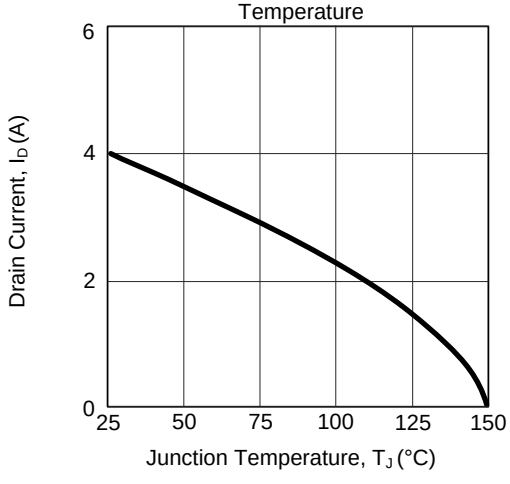

■ TYPICAL CHARACTERISTICS (Cont.)

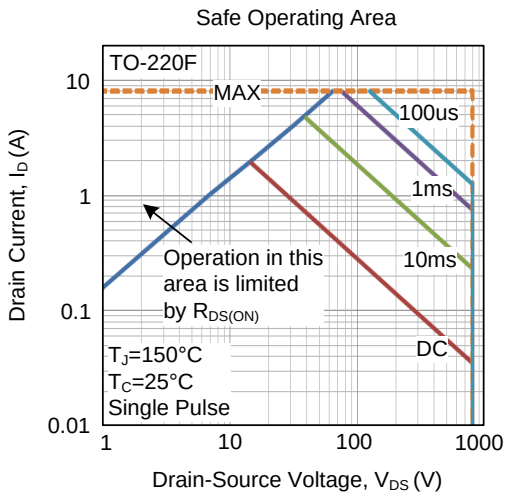

UTC assumes no responsibility for equipment failures that result from using products at values that exceed, even momentarily, rated values (such as maximum ratings, operating condition ranges, or other parameters) listed in products specifications of any and all UTC products described or contained herein. UTC products are not designed for use in life support appliances, devices or systems where malfunction of these products can be reasonably expected to result in personal injury. Reproduction in whole or in part is prohibited without the prior written consent of the copyright owner. UTC reserves the right to make changes to information published in this document, including without limitation specifications and product descriptions, at any time and without notice. This document supersedes and replaces all information supplied prior to the publication hereof.

ENTEGRECİ

Bu belge www.entegreci.com üzerinden sunulmaktadır.

Elektronik komponent tedarikinde Entegreci

Entegreci, Eskişehir merkezli, Türkiye geneline satış yapan bir elektronik komponent mağazasıdır. Entegreler (IC), mikrodenetleyiciler, transistörler, diyotlar, pasif elemanlar, konnektörler, modüller ve geliştirme kartları tek adetten seri üretim adetlerine kadar satılır. Ürün sayfalarında güncel stok durumunu, fiyatı ve datasheet bağlantısını bulabilirsiniz.

Parça koduyla arama

Üretici parça numarasını yazın; stok ve fiyatı hemen görün.

www.entegreci.com

Ürün kategorileri

Entegreden kapasitöre tüm elektronik komponent kategorileri.

Kategorilere göz atın

Üreticiler

Aradığınız üreticinin ürünlerini tek sayfada inceleyin.

Üreticileri görün

Toplu alım ve teklif

Listede olmayan ya da yüksek adetli parçalar için teklif isteyin.

Teklif isteyin

www.entegreci.com | **destek@entegreci.com** | **0850 305 90 34**

Entegreci is an online electronic components store based in Türkiye. Search by manufacturer part number to see stock, prices and datasheets for integrated circuits, microcontrollers, transistors, passive components and connectors, or request a quote for parts that are not listed.

Bu sayfa Entegreci tarafından eklenmiştir. Belgenin önceki sayfaları asıl yayıncısına aittir ve içeriği değiştirilmemiştir; en güncel sürüm için belgenin yayıncısına başvurun.