4N65-Q

Power MOSFET

4.0A, 650V N-CHANNEL POWER MOSFET

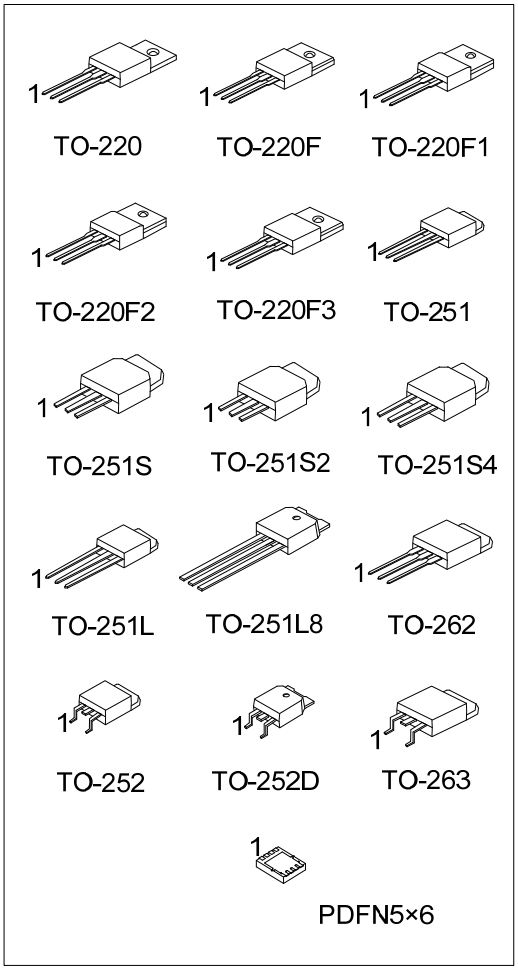

■ DESCRIPTION

The UTC **4N65-Q** is a high voltage power MOSFET designed to have better characteristics, such as fast switching time, low gate charge, low on-state resistance and have a high rugged avalanche characteristic. This power MOSFET is usually used in high speed switching applications including power supplies, PWM motor controls, high efficient AC to DC converters and bridge circuits.

■ FEATURES

* $R_{DS(ON)} \leq 3.1\ \Omega$ @ V_{GS}=10V, I_D=2.2A
* Fast Switching Capability
* Avalanche Energy Specified
* Improved dv/dt Capability, High Ruggedness

■ SYMBOL

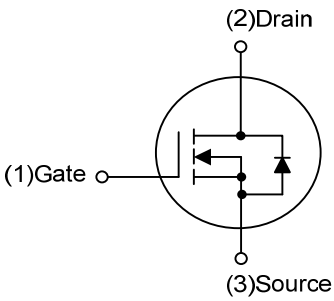

TO-220/TO-220F/TO-220F1
TO-220F2/TO-220F3/TO-251
TO-251S/TO-251L/TO-251L8
TO-251S2/TO-251S4/TO-252
TO-252D/TO-262/TO-263

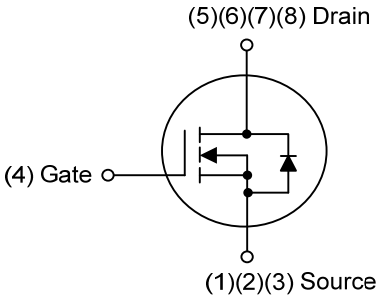

PDFN5×6

Copyright © 2021 Unisonic Technologies Co., Ltd

■ ORDERING INFORMATION

Ordering Number		Package	Pin Assignment								Packing
Lead Free	Halogen Free		1	2	3	4	5	6	7	8	
4N65L-TA3-T	4N65G-TA3-T	TO-220	G	D	S	-	-	-	-	-	Tube
4N65L-TF1-T	4N65G-TF1-T	TO-220F1	G	D	S	-	-	-	-	-	Tube
4N65L-TF2-T	4N65G-TF2-T	TO-220F2	G	D	S	-	-	-	-	-	Tube
4N65L-TF3T-T	4N65G-TF3T-T	TO-220F3	G	D	S	-	-	-	-	-	Tube
4N65L-TF3-T	4N65G-TF3-T	TO-220F	G	D	S	-	-	-	-	-	Tube
4N65L-TM3-T	4N65G-TM3-T	TO-251	G	D	S	-	-	-	-	-	Tube
4N65L-TMA-T	4N65G-TMA-T	TO-251L	G	D	S	-	-	-	-	-	Tube
4N65L-TMA8-T	4N65G-TMA8-T	TO-251L8	G	D	S	-	-	-	-	-	Tube
4N65L-TMS-T	4N65G-TMS-T	TO-251S	G	D	S	-	-	-	-	-	Tube
4N65L-TMS2-T	4N65G-TMS2-T	TO-251S2	G	D	S	-	-	-	-	-	Tube
4N65L-TMS4-T	4N65G-TMS4-T	TO-251S4	G	D	S	-	-	-	-	-	Tube
4N65L-TN3-R	4N65G-TN3-R	TO-252	G	D	S	-	-	-	-	-	Tape Reel
4N65L-TND-R	4N65G-TND-R	TO-252D	G	D	S	-	-	-	-	-	Tape Reel
4N65L-T2Q-T	4N65G-T2Q-T	TO-262	G	D	S	-	-	-	-	-	Tube
4N65L-TQ2-R	4N65G-TQ2-R	TO-263	G	D	S	-	-	-	-	-	Tape Reel
4N65L-TQ2-T	4N65G-TQ2-T	TO-263	G	D	S	-	-	-	-	-	Tube
4N65L-P5060-R	4N65G-P5060-R	PDFN5×6	S	S	S	G	D	D	D	D	Tape Reel

Note: Pin Assignment: G: Gate D: Drain S: Source

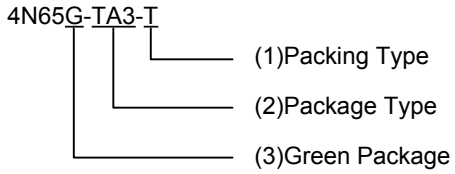

(1) T: Tube, R: Tape Reel
(2) TA3: TO-220, TF1: TO-220F1, TF2: TO-220F2
TF3: TO-220F, TF3T: TO-220F3, TM3: TO-251,
TMA: TO-251L, TMA8: TO-251L8, TMS: TO-251S,
TMS2: TO-251S2, TN3: TO-252, TMS4: TO-251S4,
TND: TO-252D, T2Q: TO-262, TQ2: TO-263,
P5060: PDFN5×6
(3) G: Halogen Free and Lead Free, L: Lead Free

■ MARKING

PACKAGE		MARKING
TO-220 TO-220F TO-220F1 TO-220F2 TO-220F3 TO-251 TO-251L TO-251L8	TO-251S TO-251S2 TO-251S4 TO-252 TO-252D TO-262 TO-263	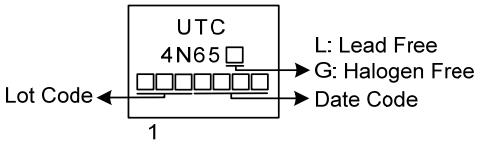
PDFN5×6		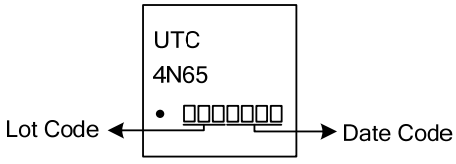

■ ABSOLUTE MAXIMUM RATINGS (T_C = 25°C, unless otherwise specified)

PARAMETER		SYMBOL	RATINGS	UNIT
Drain-Source Voltage		V_{DSS}	650	V
Gate-Source Voltage		V_{GSS}	±30	V
Avalanche Current (Note2)		I_{AR}	4.4	A
Drain Current	Continuous	I_D	4.0	A
	Pulsed (Note2)	I_{DM}	16	A
Avalanche Energy	Single Pulsed (Note3)	E_{AS}	60	mJ
	Repetitive (Note2)	E_{AR}	10.6	mJ
Peak Diode Recovery dv/dt (Note4)		dv/dt	4.5	V/ns
Power Dissipation	TO-220/TO-262/TO-263	P_D	106	W
	TO-220F/TO-220F1 TO-220F3		36	W
	TO-220F2		38	W
	TO-251/TO-251L TO-251L8/TO-251S TO-251S2/TO-251S4 TO-252/TO-252D		50	W
	PDFN5×6		30	W
Junction Temperature		T_J	+150	°C
Operating Temperature		T_{OPR}	-55 ~ +150	°C
Storage Temperature		T_{STG}	-55 ~ +150	°C

Notes: 1. Absolute maximum ratings are those values beyond which the device could be permanently damaged. Absolute maximum ratings are stress ratings only and functional device operation is not implied.
2. Repetitive Rating: Pulse width limited by maximum junction temperature.
3. L = 30mH, I_{AS} = 2.1A, V_{DD} = 50V, R_G = 25 Ω, Starting T_J = 25°C
4. I_{SD}≤4.4A, di/dt ≤200A/μs, V_{DD}≤BV_{DSS}, Starting T_J = 25°C

■ THERMAL DATA

PARAMETER	PACKAGE	SYMBOL	RATINGS	UNIT
Junction to Ambient	TO-220/TO-262/TO-263 TO-220F/TO-220F1 TO-220F2/TO-220F3	θ_{JA}	62.5	°C/W
	TO-251/TO-251L TO-251L8/TO-251S TO-251S2/TO-251S4 TO-252/TO-252D		83	°C/W
	PDFN5×6		75 (Note)	°C/W
Junction to Case	TO-220/TO-262/TO-263	θ_{JC}	1.18	°C/W
	TO-220F/TO-220F1 TP-220F3		3.47	°C/W
	TO-220F2		3.28	°C/W
	TO-251/TO-251L TO-251L8/TO-251S TO-251S2/TO-251S4 TO-252/TO-252D		2.5	°C/W
	PDFN5×6		4.17 (Note)	°C/W

Note: The data tested by surface mounted on a 1 $inch^2$ FR-4 board with 2OZ copper.

■ ELECTRICAL CHARACTERISTICS (T_C=25°C, unless otherwise specified)

PARAMETER		SYMBOL	TEST CONDITIONS	MIN	TYP	MAX	UNIT
OFF CHARACTERISTICS							
Drain-Source Breakdown Voltage		BV_{DSS}	V_{GS} = 0 V, I_D = 250μA	650			V
Drain-Source Leakage Current		I_{DSS}	V_{DS} = 650 V, V_{GS} = 0 V			10	μA
Gate-Source Leakage Current	Forward	I_{GSS}	V_{GS} = 30 V, V_{DS} = 0 V			100	nA
	Reverse		V_{GS} = -30 V, V_{DS} = 0 V			-100	nA
Breakdown Voltage Temperature Coefficient		$\triangle BV_{DSS}/\triangle T_J$	I_D=250μA, Referenced to 25°C		0.6		V/°C
ON CHARACTERISTICS							
Gate Threshold Voltage		$V_{GS(TH)}$	V_{DS} = V_{GS}, I_D = 250μA	2.0		4.0	V
Static Drain-Source On-State Resistance		$R_{DS(ON)}$	V_{GS} = 10 V, I_D = 2.2A		2.9	3.1	Ω
DYNAMIC CHARACTERISTICS							
Input Capacitance		C_{ISS}	V_{GS}=V, V_{DS}=25V, f=1MHz		470	530	pF
Output Capacitance		C_{OSS}			50	70	pF
Reverse Transfer Capacitance		C_{RSS}			10	13	pF
SWITCHING CHARACTERISTICS							
Total Gate Charge (Note 1)		Q_G	V_{DS}=520V, I_D= 4.0A, V_{GS}=10V (Note 1, 2)		55	75	nC
Gate-Source Charge		Q_{GS}			15	21	nC
Gate-Drain Charge		Q_{GD}			18	24	nC
Turn-On Delay Time (Note 1)		$t_{D(ON)}$	V_{DS}=325V, I_D 4.0A, R_G=25Ω (Note 1, 2)		38	75	ns
Turn-On Rise Time		t_R			45	85	ns
Turn-Off Delay Time		$t_{D(OFF)}$			90	130	ns
Turn-Off Fall Time		t_F			35	80	ns
SOURCE- DRAIN DIODE RATINGS AND CHARACTERISTICS							
Maximum Continuous Drain-Source Diode Forward Current		I_S				4.4	A
Maximum Pulsed Drain-Source Diode Forward Current		I_{SM}				17.6	A
Drain-Source Diode Forward Voltage (Note 1)		V_{SD}	V_{GS} = 0 V, I_S = 4.4A			1.4	V
Reverse Recovery Time (Note 1)		t_{rr}	V_{GS} = 0V, I_S = 4.4A, dI_F/dt = 100 A/μs (Note 1)		250		ns
Reverse Recovery Charge		Q_{rr}			1.5		μC

Note: 1. Pulse Test: Pulse width ≤ 300μs, Duty cycle ≤ 2%.
2. Essentially independent of operating temperature.

■ TEST CIRCUITS AND WAVEFORMS

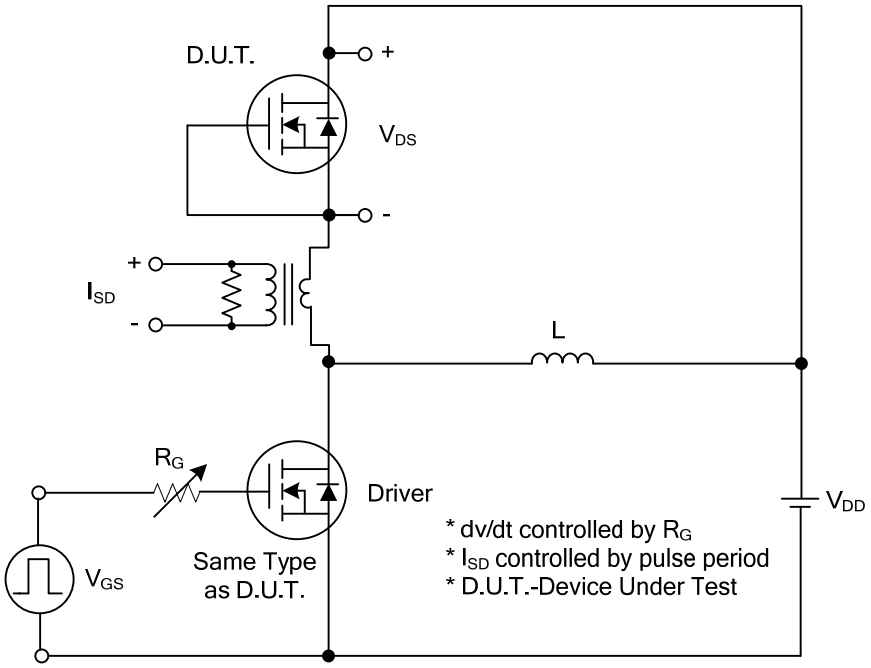

Peak Diode Recovery dv/dt Test Circuit

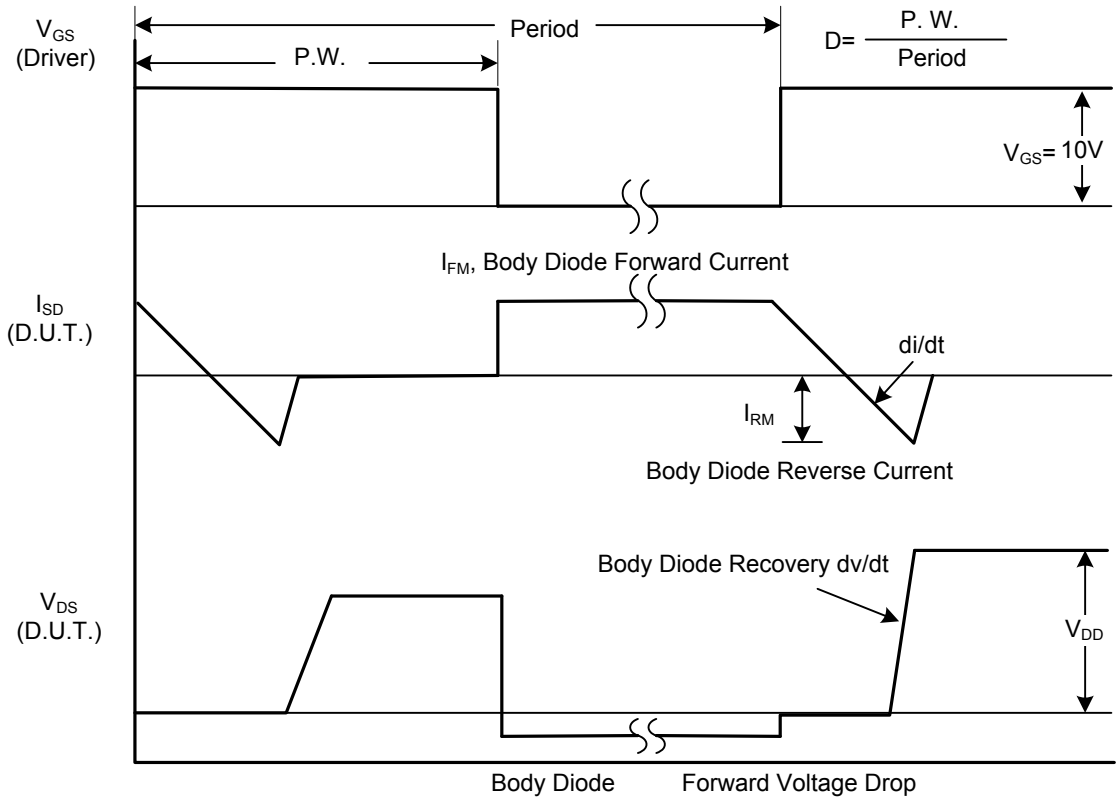

Peak Diode Recovery dv/dt Waveforms

■ TEST CIRCUITS AND WAVEFORMS

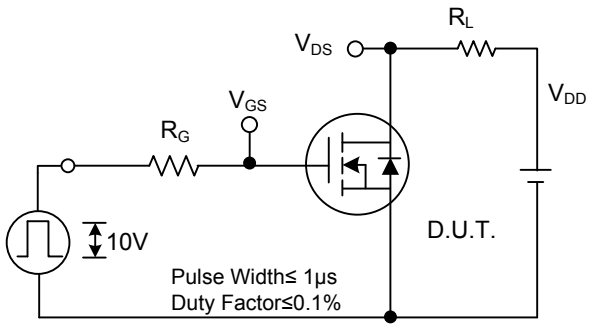

Switching Test Circuit

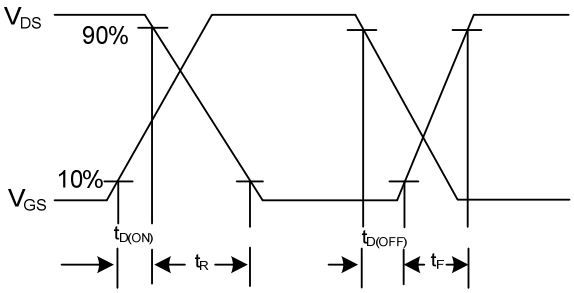

Switching Waveforms

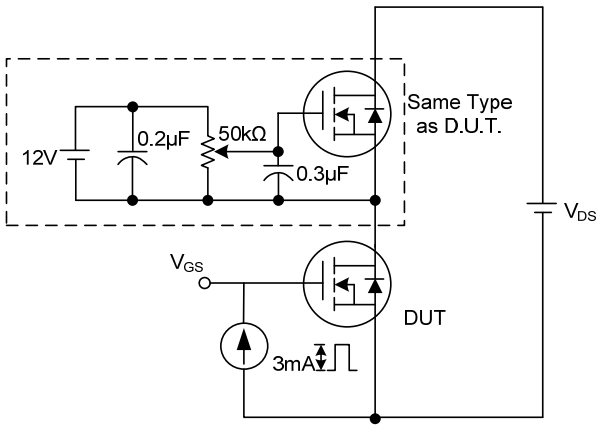

Gate Charge Test Circuit

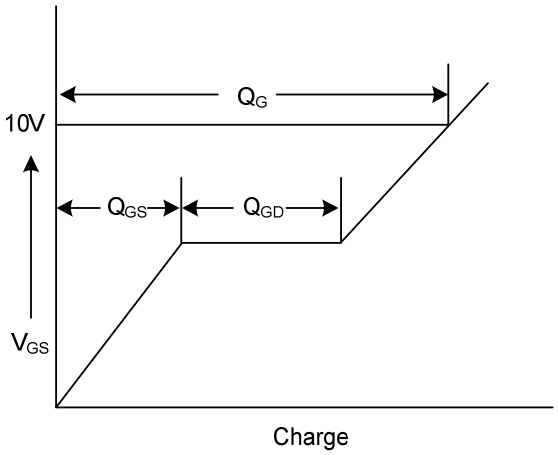

Gate Charge Waveform

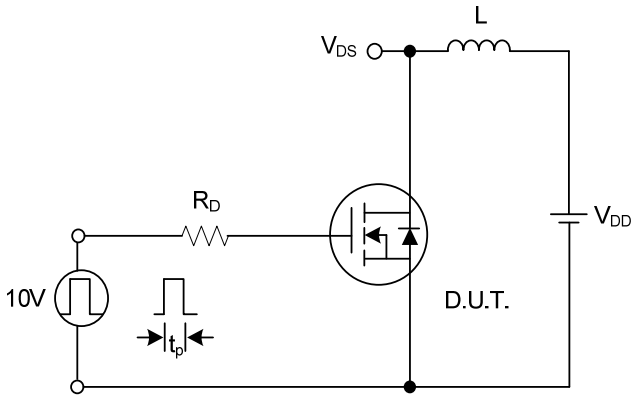

Unclamped Inductive Switching Test Circuit

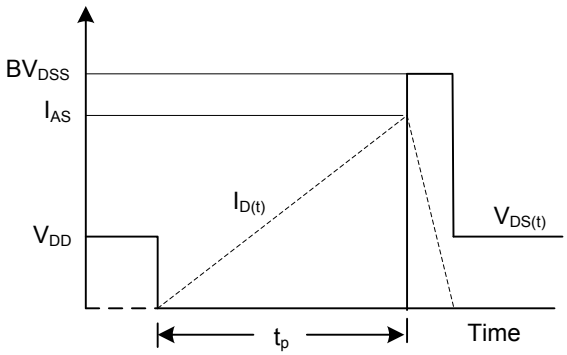

Unclamped Inductive Switching Waveforms

■ TYPICAL CHARACTERISTICS

Breakdown Voltage Variation vs. Temperature

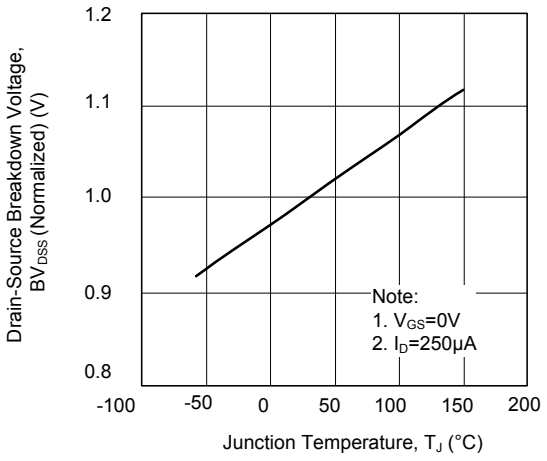

On-Resistance Junction Temperature

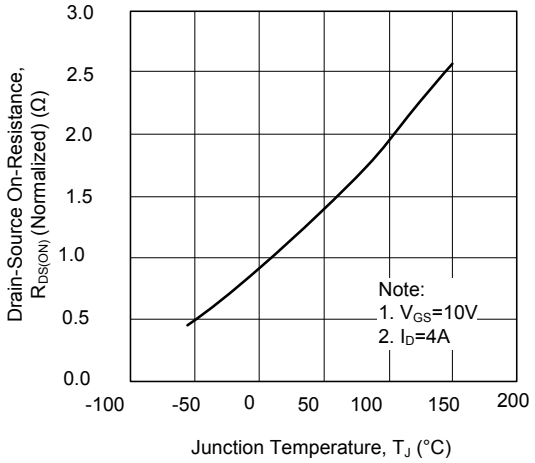

On-State Characteristics

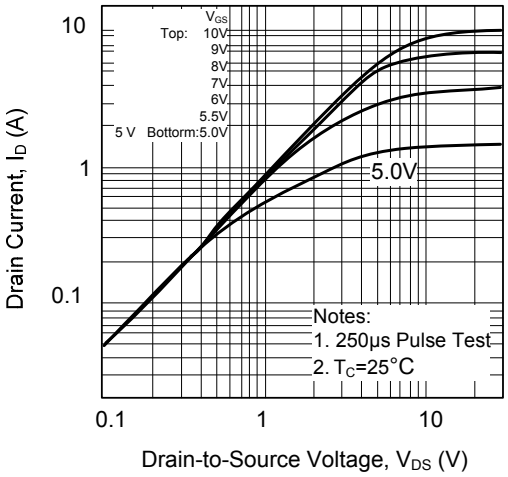

Transfer Characteristics

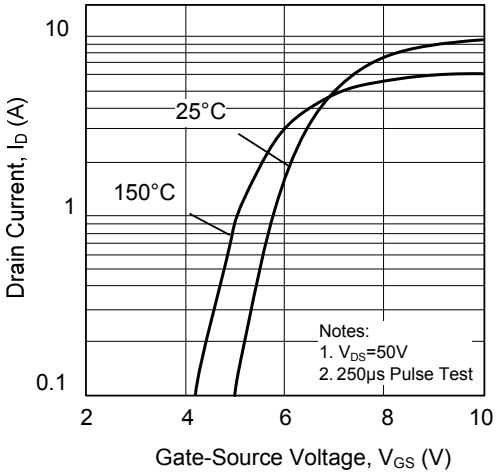

Safe Operating Area

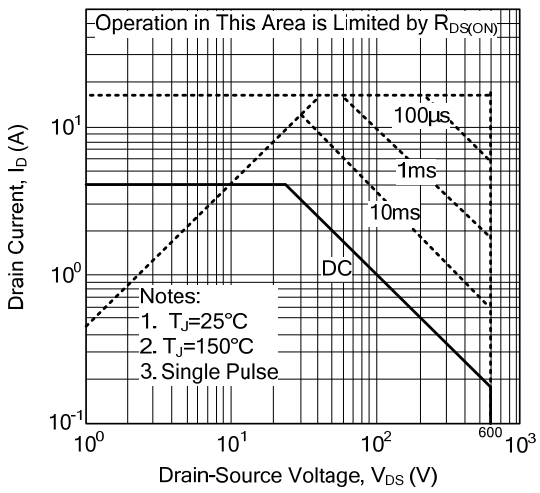

Maximum Drain Current vs. Case Temperature

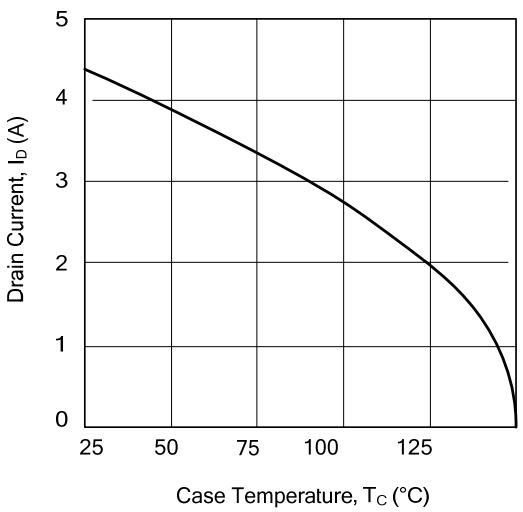

■ TYPICAL CHARACTERISTICS (Cont.)

On-Resistance Variation vs. Drain Current and Gate Voltage

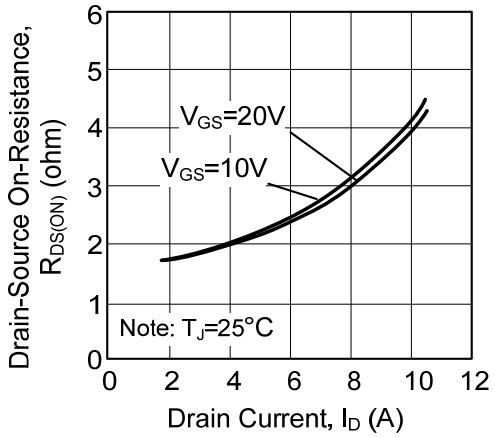

On State Current vs. Allowable Case Temperature

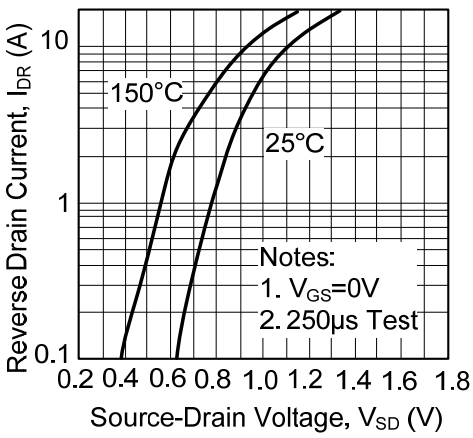

Capacitance Characteristics (Non-Repetitive)

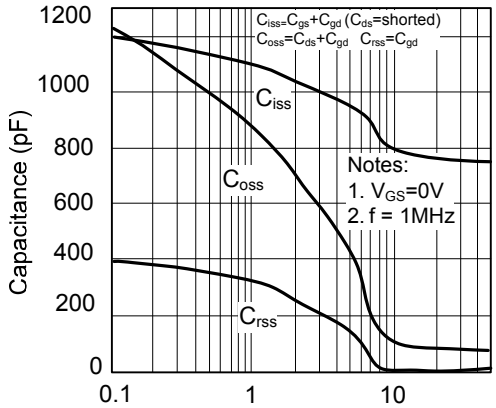

Gate Charge Characteristics

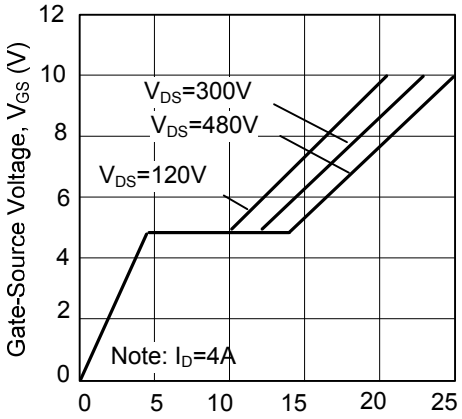

Transient Thermal Response Curve

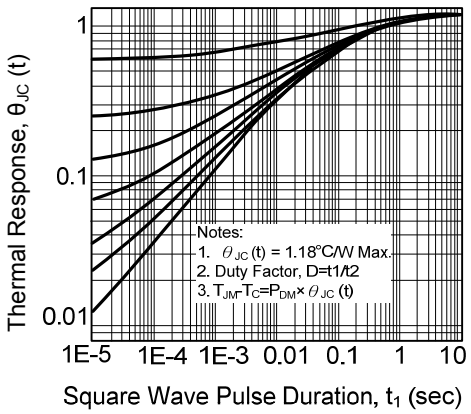

Power Dissipation

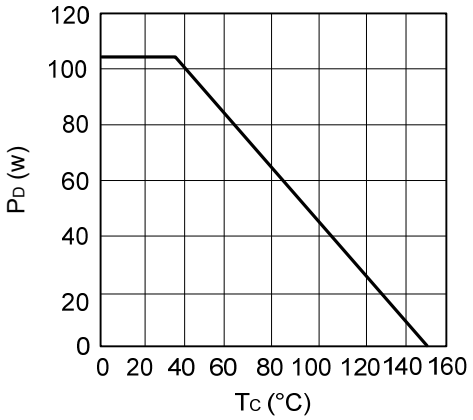

UTC assumes no responsibility for equipment failures that result from using products at values that exceed, even momentarily, rated values (such as maximum ratings, operating condition ranges, or other parameters) listed in products specifications of any and all UTC products described or contained herein. UTC products are not designed for use in life support appliances, devices or systems where malfunction of these products can be reasonably expected to result in personal injury. Reproduction in whole or in part is prohibited without the prior written consent of the copyright owner. UTC reserves the right to make changes to information published in this document, including without limitation specifications and product descriptions, at any time and without notice. This document supersedes and replaces all information supplied prior to the publication hereof.

ENTEGRECİ

Bu belge www.entegreci.com üzerinden sunulmaktadır.

Elektronik komponent tedarikinde Entegreci

Entegreci, Eskişehir merkezli, Türkiye geneline satış yapan bir elektronik komponent mağazasıdır. Entegreler (IC), mikrodenetleyiciler, transistörler, diyotlar, pasif elemanlar, konnektörler, modüller ve geliştirme kartları tek adetten seri üretim adetlerine kadar satılır. Ürün sayfalarında güncel stok durumunu, fiyatı ve datasheet bağlantısını bulabilirsiniz.

Parça koduyla arama

Üretici parça numarasını yazın; stok ve fiyatı hemen görün.

www.entegreci.com

Ürün kategorileri

Entegreden kapasitöre tüm elektronik komponent kategorileri.

Kategorilere göz atın

Üreticiler

Aradığınız üreticinin ürünlerini tek sayfada inceleyin.

Üreticileri görün

Toplu alım ve teklif

Listede olmayan ya da yüksek adetli parçalar için teklif isteyin.

Teklif isteyin

www.entegreci.com | **destek@entegreci.com** | **0850 305 90 34**

Entegreci is an online electronic components store based in Türkiye. Search by manufacturer part number to see stock, prices and datasheets for integrated circuits, microcontrollers, transistors, passive components and connectors, or request a quote for parts that are not listed.

Bu sayfa Entegreci tarafından eklenmiştir. Belgenin önceki sayfaları asıl yayıncısına aittir ve içeriği değiştirilmemiştir; en güncel sürüm için belgenin yayıncısına başvurun.