40A, 150V N-CHANNEL POWER MOSFET

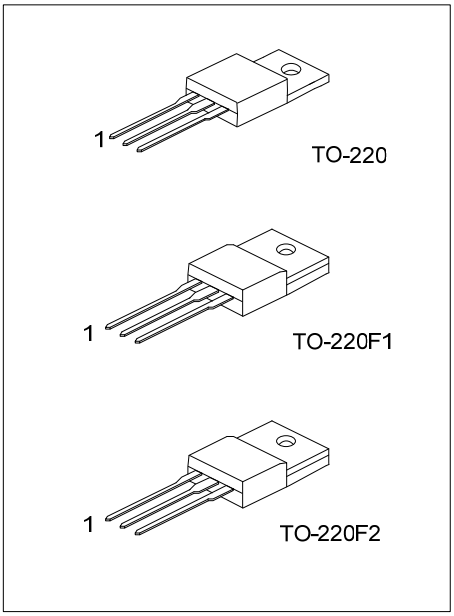

■ DESCRIPTION

The UTC **40N15** is a N-channel enhancement MOSFET, it uses UTC's advanced technology to provide the customers with perfect $R_{DS(ON)}$, high switching speed, high current capacity and low gate charge.

■ FEATURES

* $R_{DS(ON)}$ < 50mΩ @ V_{GS}=10V, I_D=20A
* High Switching Speed
* High Current Capacity

■ ORDERING INFORMATION

Ordering Number		Package	Pin Assignment			Packing
Lead Free	Halogen Free		1	2	3	
40N15L-TA3-T	40N15G-TA3-T	TO-220	G	D	S	Tube
40N15L-TF1-T	40N15G-TF1-T	TO-220F1	G	D	S	Tube
40N15L-TF2-T	40N15G-TF2-T	TO-220F2	G	D	S	Tube

Note: Pin Assignment: G: Gate D: Drain S: Source

40N15G-TA3-T (1)Packing Type (2)Package Type (3)Green Package	(1) T: Tube (2) TA3: TO-220, TF1: TO-220F1, TF2: TO-220F2 (3) G: Halogen Free and Lead Free, L: Lead Free

■ MARKING

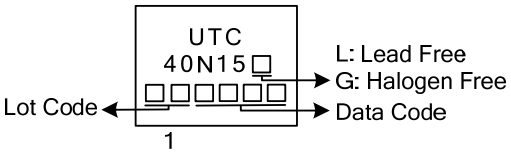

Copyright © 2017 Unisonic Technologies Co., Ltd

■ ABSOLUTE MAXIMUM RATINGS

PARAMETER		SYMBOL	RATINGS	UNIT
Drain-Source Voltage		V_{DSS}	150	V
Gate-Source Voltage		V_{GSS}	±25	V
Drain Current	Continuous	I_D	40	A
	Pulsed	I_{DM}	180	A
Avalanche Current		I_{AR}	45.6	A
Avalanche Energy	Single Pulsed	E_{AS}	650	mJ
	Repetitive	E_{AR}	21	mJ
Peak Diode Recovery dv/dt		dv/dt	7	V/ns
Power Dissipation	TO-220	P_D	166	W
	TO-220F1/TO-220F2		40	W
Junction Temperature		T_J	-50 ~ +150	°C
Storage Temperature Range		T_{STG}	-50 ~ +150	°C

Note: Absolute maximum ratings are those values beyond which the device could be permanently damaged. Absolute maximum ratings are stress ratings only and functional device operation is not implied.

■ THERMAL CHARACTERISTICS

PARAMETER		SYMBOL	RATINGS	UNIT
Junction to Ambient		θ_{JA}	62.5	°C/W
Junction to Case	TO-220	θ_{JC}	0.9	°C/W
	TO-220F1/TO-220F2		3.125	°C/W

■ ELECTRICAL CHARACTERISTICS

PARAMETER		SYMBOL	TEST CONDITIONS	MIN	TYP	MAX	UNIT
OFF CHARACTERISTICS							
Drain-Source Breakdown Voltage		BV_{DSS}	V_{GS}=0V, I_D=250μA	150			V
Drain-Source Leakage Current		I_{DSS}	V_{GS}=0V, V_{DS}=150V			900	nA
Gate-Source Leakage Current	Forward	I_{GSS}	V_{GS}=+20V, V_{DS}=0V			+100	nA
	Reverse		V_{GS}=-20V, V_{DS}=0V			-100	nA
ON CHARACTERISTICS							
Gate Threshold Voltage		$V_{GS(TH)}$	V_{DS}=V_{GS}, I_D=250μA	2.2		3.8	V
Static Drain-Source On-State Resistance		$R_{DS(ON)}$	V_{GS}=10V, I_D=20A			50	mΩ
DYNAMIC PARAMETERS							
Input Capacitance		C_{ISS}	V_{DS}=25V, V_{GS}=0V, f=1.0MHz		2500		pF
Output Capacitance		C_{OSS}			520		pF
Reverse Transfer Capacitance		C_{RSS}			100		pF
SWITCHING PARAMETERS							
Total Gate Charge		Q_G	V_{GS}=10V, V_{DD}=50V, I_D=1.3A, I_G=100μA		85		nC
Gate to Source Charge		Q_{GS}			15		nC
Gate to Drain Charge		Q_{GD}			41		nC
Turn-ON Delay Time		$t_{D(ON)}$	V_{GS}=0~10V, V_{DD}=30V, I_D=0.5A, R_G=25Ω		35		ns
Rise Time		t_R			320		ns
Turn-OFF Delay Time		$t_{D(OFF)}$			210		ns
Fall-Time		t_F			200		ns
SOURCE- DRAIN DIODE RATINGS AND CHARACTERISTICS							
Maximum Body-Diode Continuous Current		I_S				40	A
Maximum Body-Diode Pulsed Current		I_{SM}				160	A
Drain-Source Diode Forward Voltage		V_{SD}	I_S=40A, V_{GS}=0V			1.48	V
Body Diode Reverse Recovery Time		t_{RR}	V_{GS}=0V, I_S=30A, dI_F/d_t=100A/μs		150		ns
Body Diode Reverse Recovery Charge		Q_{RR}			0.9		μC

■ TYPICAL CHARACTERISTICS

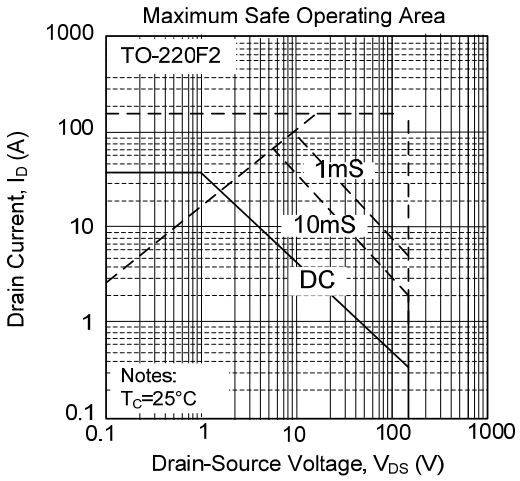

UTC assumes no responsibility for equipment failures that result from using products at values that exceed, even momentarily, rated values (such as maximum ratings, operating condition ranges, or other parameters) listed in products specifications of any and all UTC products described or contained herein. UTC products are not designed for use in life support appliances, devices or systems where malfunction of these products can be reasonably expected to result in personal injury. Reproduction in whole or in part is prohibited without the prior written consent of the copyright owner. The information presented in this document does not form part of any quotation or contract, is believed to be accurate and reliable and may be changed without notice.

ENTEGRECİ

Bu belge www.entegreci.com üzerinden sunulmaktadır.

Elektronik komponent tedarikinde Entegreci

Entegreci, Eskişehir merkezli, Türkiye geneline satış yapan bir elektronik komponent mağazasıdır. Entegreler (IC), mikrodenetleyiciler, transistörler, diyotlar, pasif elemanlar, konnektörler, modüller ve geliştirme kartları tek adetten seri üretim adetlerine kadar satılır. Ürün sayfalarında güncel stok durumunu, fiyatı ve datasheet bağlantısını bulabilirsiniz.

Parça koduyla arama

Üretici parça numarasını yazın; stok ve fiyatı hemen görün.

www.entegreci.com

Ürün kategorileri

Entegreden kapasitöre tüm elektronik komponent kategorileri.

Kategorilere göz atın

Üreticiler

Aradığınız üreticinin ürünlerini tek sayfada inceleyin.

Üreticileri görün

Toplu alım ve teklif

Listede olmayan ya da yüksek adetli parçalar için teklif isteyin.

Teklif isteyin

www.entegreci.com | **destek@entegreci.com** | **0850 305 90 34**

Entegreci is an online electronic components store based in Türkiye. Search by manufacturer part number to see stock, prices and datasheets for integrated circuits, microcontrollers, transistors, passive components and connectors, or request a quote for parts that are not listed.

Bu sayfa Entegreci tarafından eklenmiştir. Belgenin önceki sayfaları asıl yayıncısına aittir ve içeriği değiştirilmemiştir; en güncel sürüm için belgenin yayıncısına başvurun.