3N80

Power MOSFET

3.0A, 800V N-CHANNEL POWER MOSFET

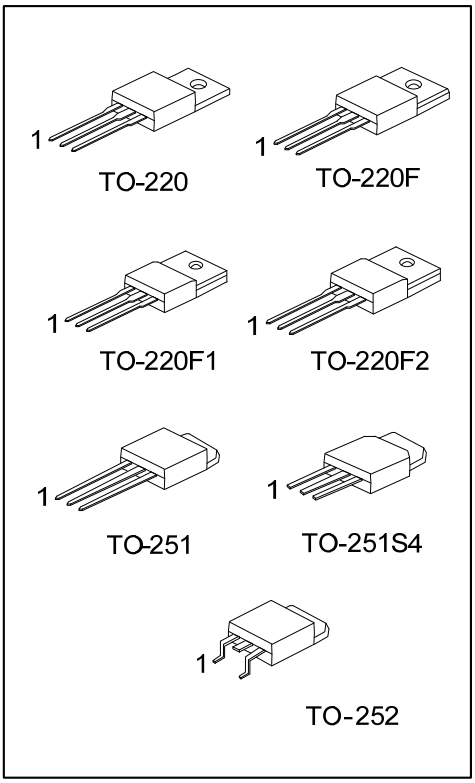

■ DESCRIPTION

The UTC **3N80** provide excellent $R_{DS(ON)}$, low gate charge and operation with low gate voltages. This device is suitable for use as a load switch or in PWM applications.

■ FEATURES

* $R_{DS(ON)}$ < 4.2Ω @V_{GS} = 10 V
* Ultra Low Gate Charge (typical 19 nC)
* Low Reverse Transfer Capacitance (C_{RSS} = Typical 11 pF)
* Fast Switching Capability
* Avalanche Energy Specified
* Improved dv/dt Capability, High Ruggedness

■ SYMBOL

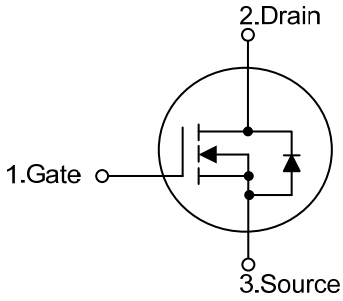

■ ORDERING INFORMATION

Ordering Number		Package	Pin Assignment			Packing
Lead Free	Halogen Free		1	2	3	
3N80L-TA3-T	3N80G-TA3-T	TO-220	G	D	S	Tube
3N80L-TF3-T	3N80G-TF3-T	TO-220F	G	D	S	Tube
3N80L-TF1-T	3N80G-TF1-T	TO-220F1	G	D	S	Tube
3N80L-TF2-T	3N80G-TF2-T	TO-220F2	G	D	S	Tube
3N80L-TM3-T	3N80G-TM3-T	TO-251	G	D	S	Tube
3N80L-TMS4-T	3N80G-TMS4-T	TO-251S4	G	D	S	Tube
3N80L-TN3-R	3N80G-TN3-R	TO-252	G	D	S	Tape Reel

Note: Pin Assignment: G: Gate D: Drain S: Source

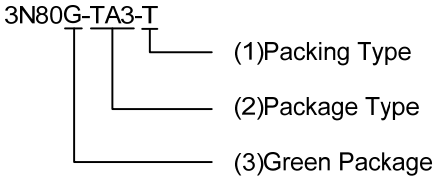

(1) T: Tube, R: Tape Reel

(2) TA3: TO-220, TF3: TO-220F, TF1: TO-220F1, TF2: TO-220F2, TM3: TO-251, TMS4: TO-251S4 TN3: TO-252

(3) G: Halogen Free and Lead Free, L: Lead Free

Copyright © 2021 Unisonic Technologies Co., Ltd

■ MARKING

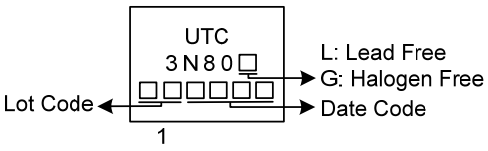

■ ABSOLUTE MAXIMUM RATINGS (T_C=25°C, unless otherwise specified)

PARAMETER		SYMBOL	RATINGS	UNIT
Drain-Source Voltage (V_{GS}=0V)		V_{DSS}	800	V
Drain-Gate Voltage (R_G=20kΩ)		V_{DGR}	800	V
Gate-Source Voltage		V_{GSS}	±30	V
Gate-Source Breakdown Voltage (I_{GS}=±1mA)		BV_{GSO}	30 (MIN)	V
Insulation Withstand Voltage (DC)	TO-220F/ TO-220F1	V_{ISO}	2500	V
Avalanche Current (Note 2)		I_{AR}	3	A
Continuous Drain Current		I_D	3	A
Pulsed Drain Current		I_{DM}	10	A
Single Pulse Avalanche Energy (Note 3)		E_{AS}	170	mJ
Peak Diode Recovery dv/dt (Note 4)		dv/dt	4.5	V/ns
Power Dissipation	TO-220	P_D	70	W
	TO-220F/ TO-220F1 TO-220F2		25	W
	TO-251/TO-251S4 TO-252		50	W
Junction Temperature		T_J	+150	°C
Storage Temperature		T_{STG}	-55 ~ +150	°C

Notes: 1. Absolute maximum ratings are those values beyond which the device could be permanently damaged. Absolute maximum ratings are stress ratings only and functional device operation is not implied.
2. Pulse width limited by $T_{J(MAX)}$.
3. Starting T_J=25 °C, I_D=I_{AR}, V_{DD}=50V
4. I_{SD}≦2.5A, di/dt≦200A/μs, V_{DD}≦BV_{DSS}, T_J≦$T_{J(MAX)}$.

■ THERMAL DATA

PARAMETER		SYMBOL	RATING	UNIT
Junction to Ambient	TO-220TO-220F TO-220F1/TO-220F2	$θ_{JA}$	62.5	°C/W
	TO-251/TO-251S4 TO-252		110	°C/W
Junction to Case	TO-220	$θ_{JC}$	1.78	°C/W
	TO-220F/ TO-220F1 TO-220F2		5	°C/W
	TO-251/TO-251S4 TO-252		2.5	°C/W

■ ELECTRICAL CHARACTERISTICS (T_C=25°C, unless otherwise specified)

PARAMETER	SYMBOL	TEST CONDITIONS	MIN	TYP	MAX	UNIT
OFF CHARACTERISTICS						
Drain-Source Breakdown Voltage	BV_{DSS}	V_{GS}=0V, I_D=250μA	800			V
Drain-Source Leakage Current	I_{DSS}	V_{DS}=800V, V_{GS}=0V			1	μA
Gate-Source Leakage Current	I_{GSS}	V_{GS}=±30V, V_{DS}=0V			±10	μA
ON CHARACTERISTICS						
Gate Threshold Voltage	$V_{GS(TH)}$	V_{DS}=V_{GS}, I_D=250μA	3.0		5.0	V
Static Drain-Source On-State Resistance	$R_{DS(ON)}$	V_{GS}=10V, I_D=1.5A		3.2	4.2	Ω
Forward Transconductance (Note 1)	g_{FS}	V_{DS}=15V, I_D=1.5A		2.1		S
DYNAMIC CHARACTERISTICS						
Input Capacitance	C_{ISS}	V_{DS}=25V, V_{GS}=0V, f=1MHz		485		pF
Output Capacitance	C_{OSS}			57		pF
Reverse Transfer Capacitance	C_{RSS}			11		pF
Equivalent Output Capacitance (Note 2)	$C_{OSS(EQ)}$	V_{GS}=0V, V_{DS}=0V~640V		22		pF
SWITCHING CHARACTERISTICS						
Total Gate Charge	Q_G	V_{DD}=640V, I_D=3A, V_{GS}=10V		19		nC
Gate-Source Charge	Q_{GS}			3.2		nC
Gate-Drain Charge	Q_{DD}			10.8		nC
Turn-On Delay Time	$t_{D(ON)}$	V_{DD}=400V, I_D=3 A, R_G=4.7Ω V_{GS}=10V		17		ns
Turn-On Rise Time	t_R			27		ns
Turn-Off Delay Time	$t_{D(OFF)}$			36		ns
Turn-Off Fall Time	t_F			40		ns
SOURCE- DRAIN DIODE RATINGS AND CHARACTERISTICS						
Source-Drain Current	I_{SD}				2.5	A
Source-Drain Current (Pulsed)	I_{SDM}				10	A
Reverse Recovery Current	I_{RRM}	I_{SD}=3A, di/dt=100A/μs, V_{DD}=50V, T_J=25°C		8.4		A
Diode Forward Voltage(Note 1)	V_{SD}	I_{SD}=3A ,V_{GS}=0V			1.6	V
Body Diode Reverse Recovery Time	t_{rr}			384		ns
Body Diode Reverse Recovery Charge	Q_{rr}			1600		nC

Note: 1. Pulse width = 300μs, Duty cycle≦1.5%.

2. $C_{OSS(EQ)}$ is defined as constant equivalent capacitance giving the same charging time as C_{OSS} when V_{DS} increases from 0to 80% V_{DSS}.

■ TEST CIRCUITS AND WAVEFORMS

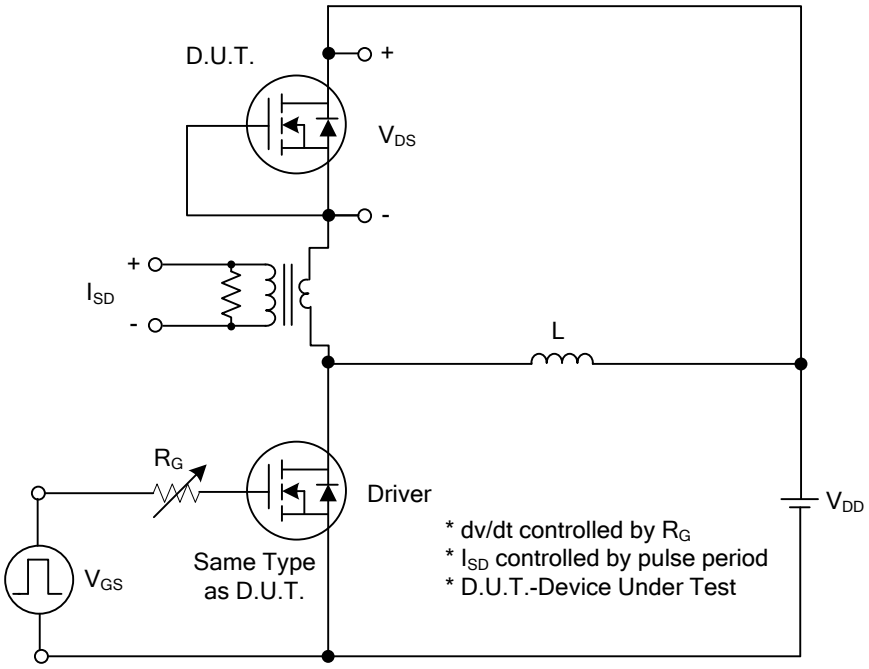

Peak Diode Recovery dv/dt Test Circuit

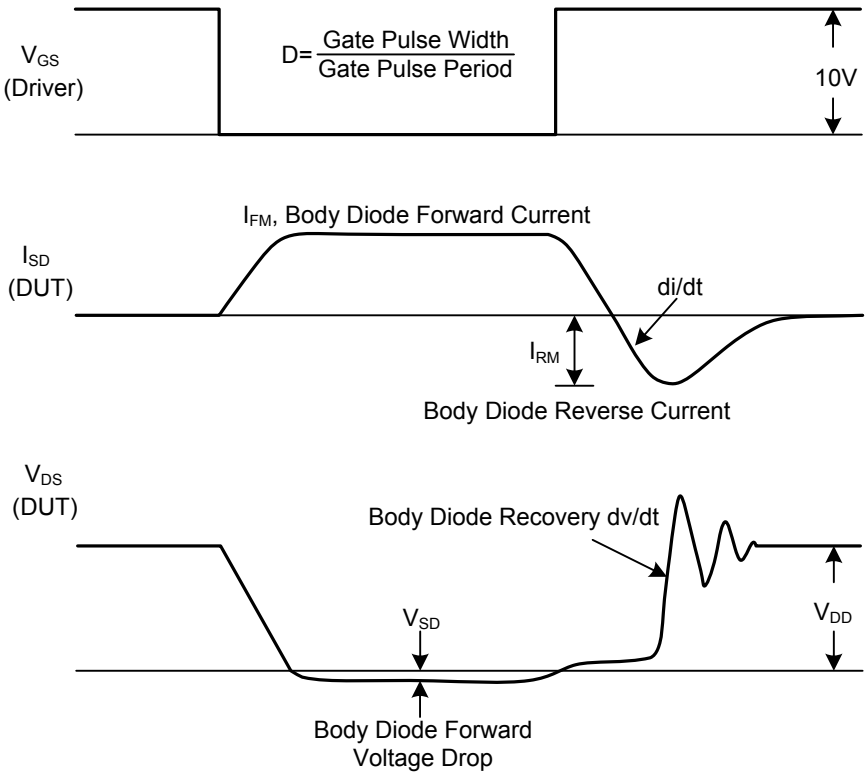

Peak Diode Recovery dv/dt Waveforms

■ TEST CIRCUITS AND WAVEFORMS (Cont.)

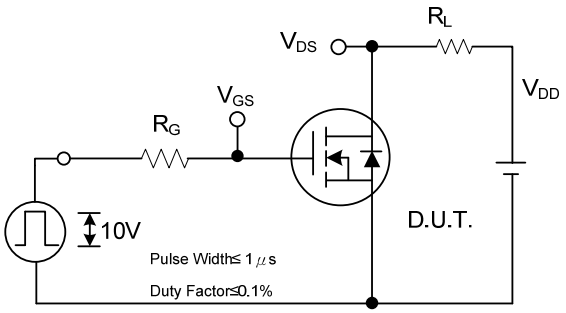

Switching Test Circuit

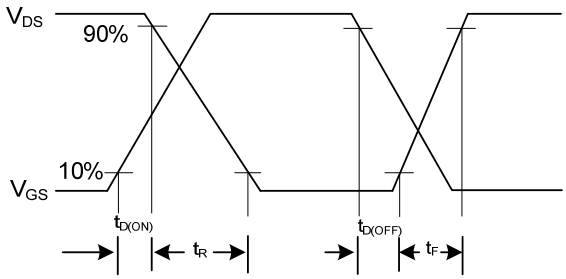

Switching Waveforms

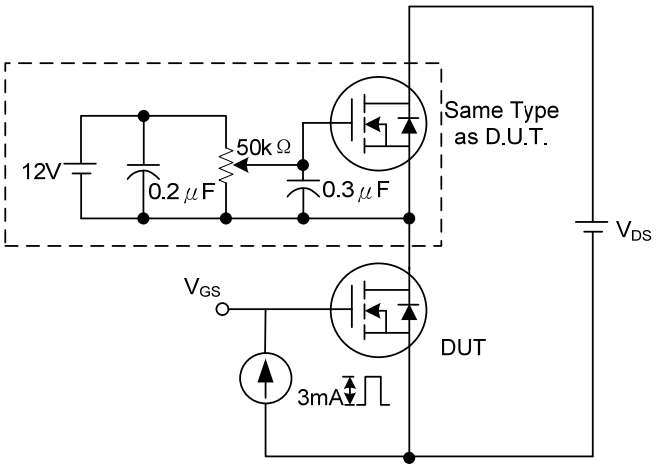

Gate Charge Test Circuit

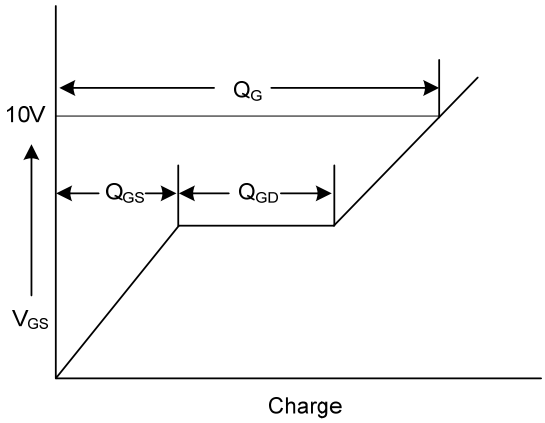

Gate Charge Waveform

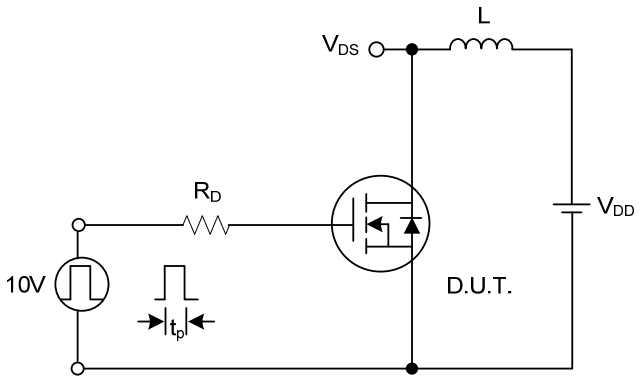

Unclamped Inductive Switching Test Circuit

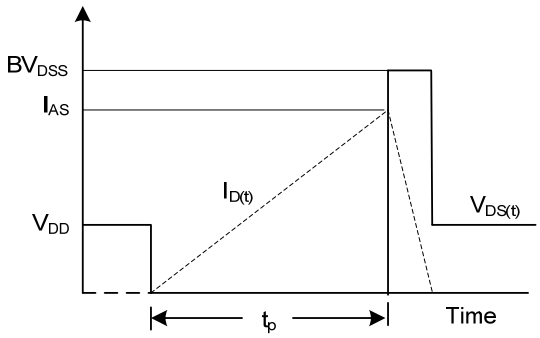

Unclamped Inductive Switching Waveforms

■ TYPICAL CHARACTERISTICS

Drain Current vs. Source to Drain Voltage

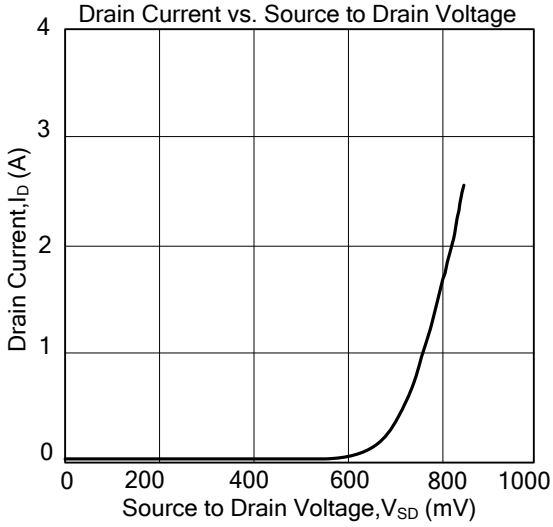

Drain-Source On-State Resistance Characteristics

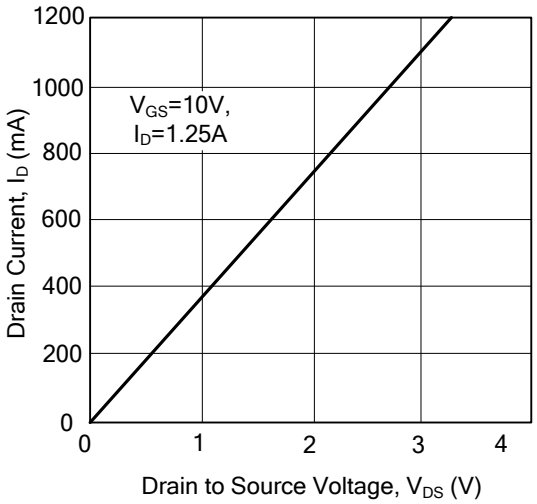

Drain Current vs. Gate Threshold Voltage

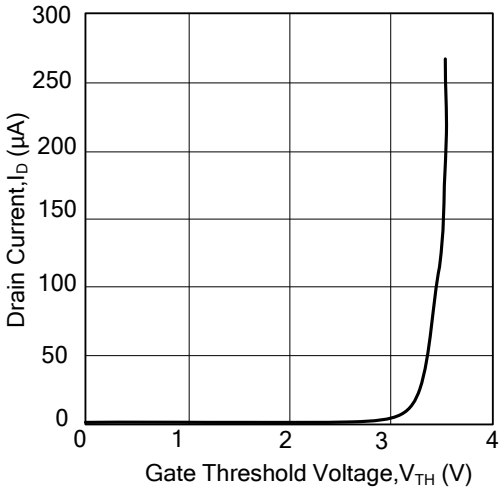

Drain Current vs. Drain-Source Breakdown Voltage

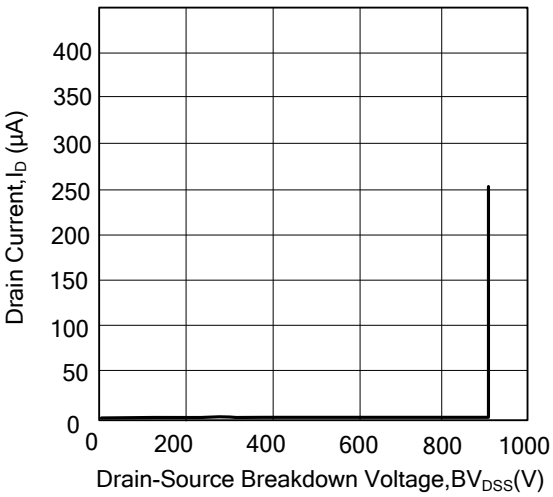

Max. Safe Operating Area

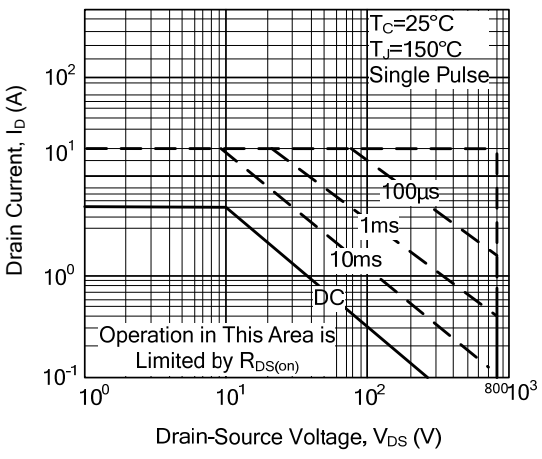

UTC assumes no responsibility for equipment failures that result from using products at values that exceed, even momentarily, rated values (such as maximum ratings, operating condition ranges, or other parameters) listed in products specifications of any and all UTC products described or contained herein. UTC products are not designed for use in life support appliances, devices or systems where malfunction of these products can be reasonably expected to result in personal injury. Reproduction in whole or in part is prohibited without the prior written consent of the copyright owner. UTC reserves the right to make changes to information published in this document, including without limitation specifications and product descriptions, at any time and without notice. This document supersedes and replaces all information supplied prior to the publication hereof.

ENTEGRECİ

Bu belge www.entegreci.com üzerinden sunulmaktadır.

Elektronik komponent tedarikinde Entegreci

Entegreci, Eskişehir merkezli, Türkiye geneline satış yapan bir elektronik komponent mağazasıdır. Entegreler (IC), mikrodenetleyiciler, transistörler, diyotlar, pasif elemanlar, konnektörler, modüller ve geliştirme kartları tek adetten seri üretim adetlerine kadar satılır. Ürün sayfalarında güncel stok durumunu, fiyatı ve datasheet bağlantısını bulabilirsiniz.

Parça koduyla arama

Üretici parça numarasını yazın; stok ve fiyatı hemen görün.

www.entegreci.com

Ürün kategorileri

Entegreden kapasitöre tüm elektronik komponent kategorileri.

Kategorilere göz atın

Üreticiler

Aradığınız üreticinin ürünlerini tek sayfada inceleyin.

Üreticileri görün

Toplu alım ve teklif

Listede olmayan ya da yüksek adetli parçalar için teklif isteyin.

Teklif isteyin

www.entegreci.com | **destek@entegreci.com** | **0850 305 90 34**

Entegreci is an online electronic components store based in Türkiye. Search by manufacturer part number to see stock, prices and datasheets for integrated circuits, microcontrollers, transistors, passive components and connectors, or request a quote for parts that are not listed.

Bu sayfa Entegreci tarafından eklenmiştir. Belgenin önceki sayfaları asıl yayıncısına aittir ve içeriği değiştirilmemiştir; en güncel sürüm için belgenin yayıncısına başvurun.