AO3407(3407)

-30V/-4.1A P Channel Advanced Power MOSFET

Features

- *Low $R_{DS(on)}$ @V_{GS}=-10V*
- *-5V Logic Level Control*
- *P Channel SOT23 Package*
- *Pb−Free, RoHS Compliant*

$V_{(BR)DSS}$	$R_{DS(ON)}$ Typ	I_D Max
-30V	43mΩ @-10V	-4.1A
	66mΩ @ -4.5V	

Applications

- Load Switch
- Switching circuits
- High-speed line driver
- Power Management Functions

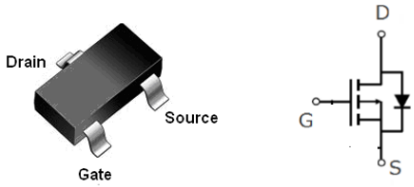

SOT-23

Order Information

Product	Package	Marking	Packing
AO3407(3407)	SOT-23	A79T	3000PCS/Reel

Absolute Maximum Ratings

Stresses exceeding Maximum Ratings may damage the device. Maximum Ratings are stress ratings only. Functional operation above the Recommended Operating Conditions is not implied. Extended exposure to stresses above the Recommended Operating Conditions may affect device reliability.

Symbol	Parameter		Rating	Unit
Common Ratings (T_A=25°C Unless Otherwise Noted)				
V_{GS}	Gate-Source Voltage		±20	V
$V_{(BR)DSS}$	Drain-Source Breakdown Voltage		-30	V
T_J	Maximum Junction Temperature		150	°C
T_{STG}	Storage Temperature Range		-50 to 150	°C
Mounted on Large Heat Sink				
I_{DM}	Pulse Drain Current Tested①	T_A=25°C	-16.4	A
I_D	Continuous Drain Current	T_A=25°C	-4.1	A
		T_A=70°C	-3.2	
P_D	Maximum Power Dissipation	T_A=25°C	1.2	W
		T_A=70°C	0.9	
$R_{\theta JA}$	Thermal Resistance Junction-Ambient		80	°C/W

Symbol	Parameter	Condition	Min	Typ	Max	Unit
Static Electrical Characteristics @ T_J = 25°C (unless otherwise stated)						
$V_{(BR)DSS}$	Drain-Source Breakdown Voltage	V_{GS}=0V I_D=-250μA	-30	--	--	V
I_{DSS}	Zero Gate Voltage Drain Current(T_A=25℃)	V_{DS}=-30V, V_{GS}=0V	--	--	-1	μA
	Zero Gate Voltage Drain Current(T_A=125℃)	V_{DS}=-24V, V_{GS}=0V	--	--	-100	uA
I_{GSS}	Gate-Body Leakage Current	V_{GS}=±20V, V_{DS}=0V	--	--	±100	nA
$V_{GS(TH)}$	Gate Threshold Voltage	V_{DS}=V_{GS}, I_D=-250μA	-1.2	-1.6	-2.5	V
$R_{DS(ON)}$	Drain-Source On-State Resistance②	V_{GS}=-10V, I_D=-4A	--	43	55	mΩ
$R_{DS(ON)}$	Drain-Source On-State Resistance②	V_{GS}=-4.5V, I_D=-3A	--	66	80	mΩ
Dynamic Electrical Characteristics @ T_J = 25°C (unless otherwise stated)						
C_{iss}	Input Capacitance	V_{DS}=-15V, V_{GS}=0V, f=1MHz	--	493	--	pF
C_{oss}	Output Capacitance		--	65	--	pF
C_{rss}	Reverse Transfer Capacitance		--	44	--	pF
Q_g	Total Gate Charge	V_{DS}=-15V I_D=-4A, V_{GS}=-10V	--	8.2	--	nC
Q_{gs}	Gate Source Charge		--	0.8	--	nC
Q_{gd}	Gate Drain Charge		--	2.7	--	nC
Switching Characteristics @ T_J = 25°C (unless otherwise stated)						
$t_{d(on)}$	Turn on Delay Time	V_{DD}=-15V, I_D=-1A, R_G=3.3Ω, V_{GS}=-10V	--	7.2	--	ns
t_r	Turn on Rise Time		--	4.8	--	ns
$t_{d(off)}$	Turn Off Delay Time		-	25	--	ns
t_f	Turn Off Fall Time		--	8.5	--	ns
Source Drain Diode Characteristics						
I_{SD}	Source drain current(Body Diode)	T_A=25℃	--	--	-2	A
V_{SD}	Forward on voltage②	T_j=25℃, I_{SD}=-4A, V_{GS}=0V	--	-0.88	-1.2	V

Notes:

① Pulse width limited by maximum allowable junction temperature

②Pulse test ; Pulse width≤300μs, duty cycle≤2%.

Typical Characteristics

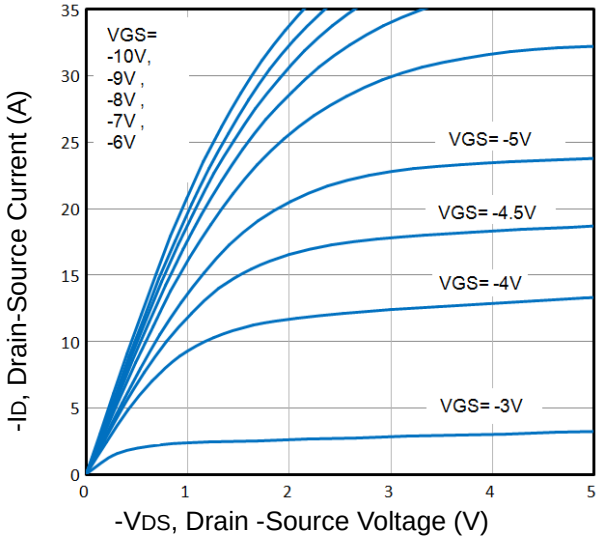

Fig1. Typical Output Characteristics

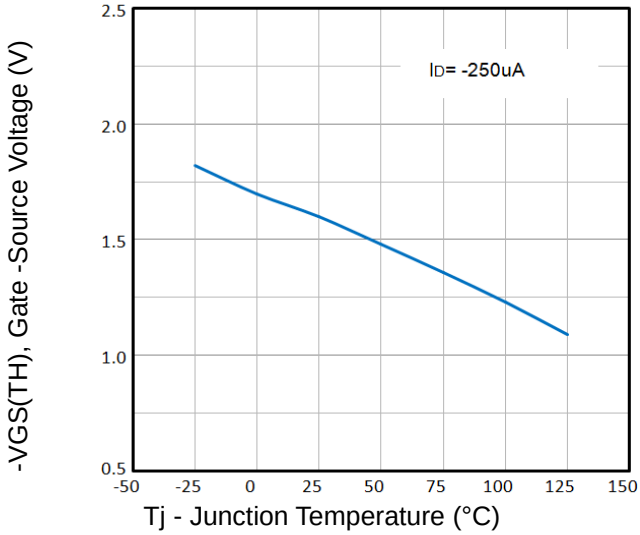

Fig2. Normalized Threshold Voltage Vs. Temperature

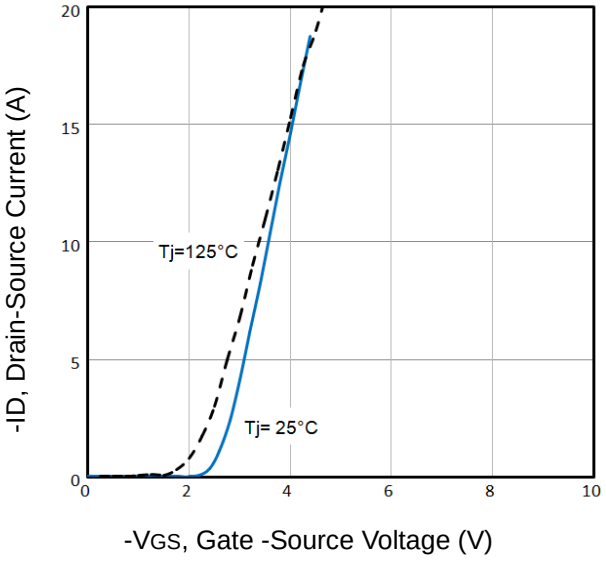

Fig3. Typical Transfer Characteristics

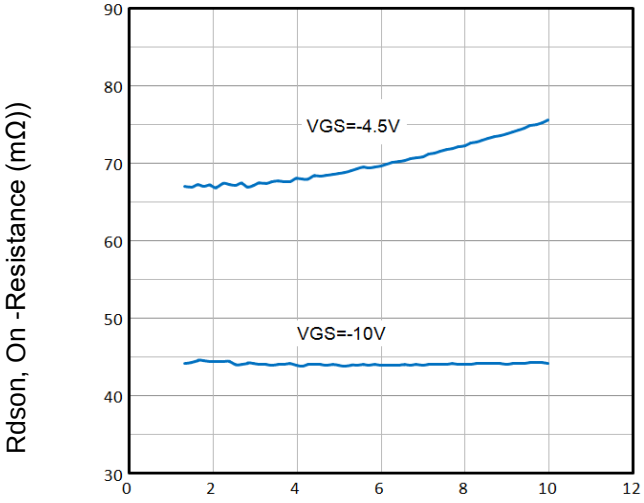

Fig4. On-Resistance vs. Drain Current and Gate

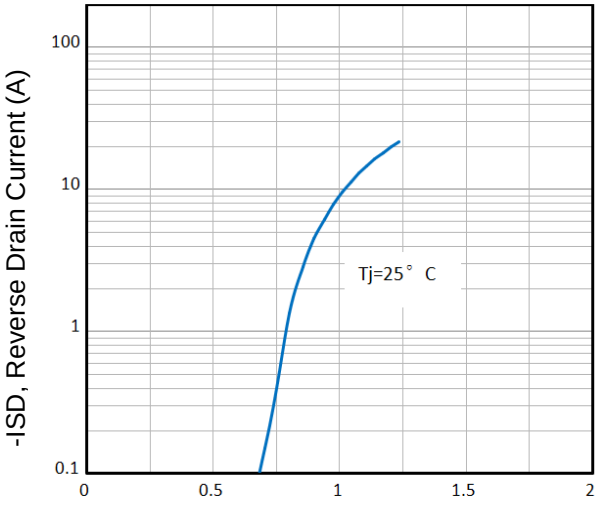

Fig5. Typical Source-Drain Diode Forward Voltage

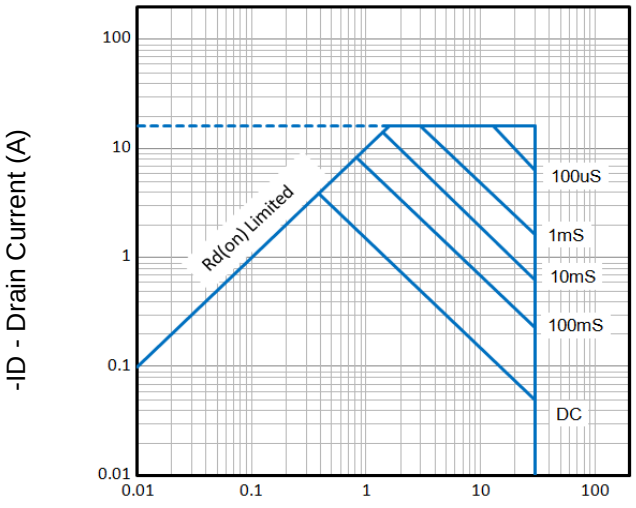

Fig6. Maximum Safe Operating Area

Typical Characteristics

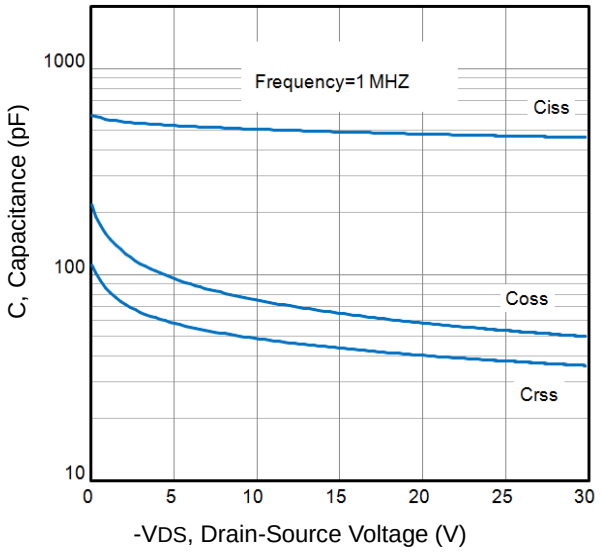

Fig7. Typical Capacitance Vs. Drain-Source Voltage

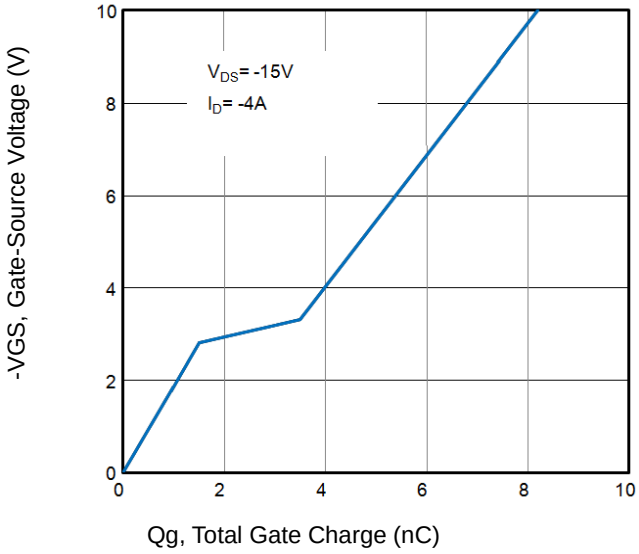

Fig8. Typical Gate Charge Vs. Gate-Source Voltage

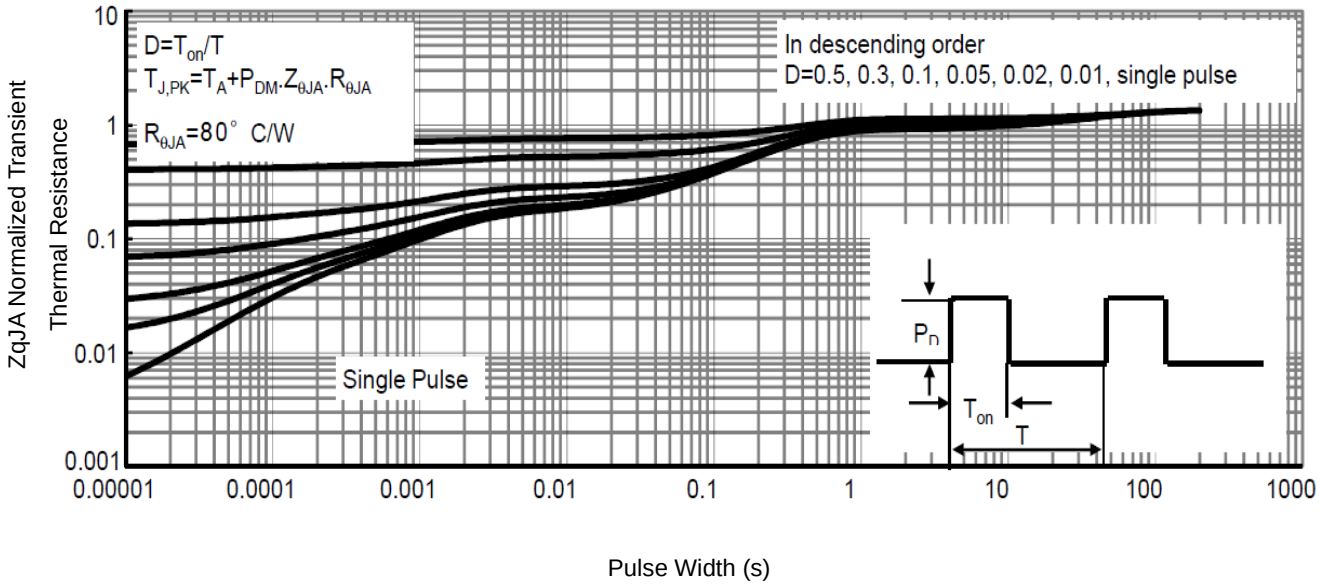

Fig9. Normalized Maximum Transient Thermal Impedance

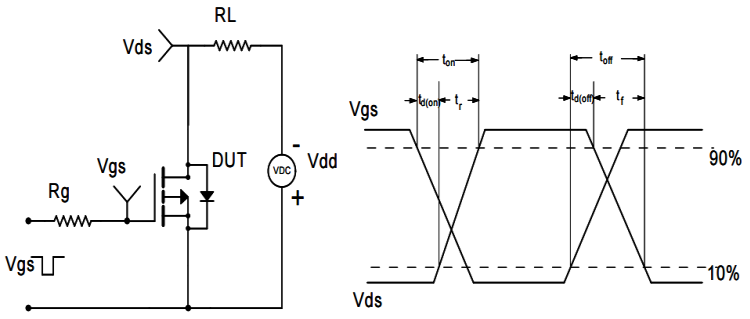

Fig10. Switching Time Test Circuit and waveforms

SOT23 Mechanical Data

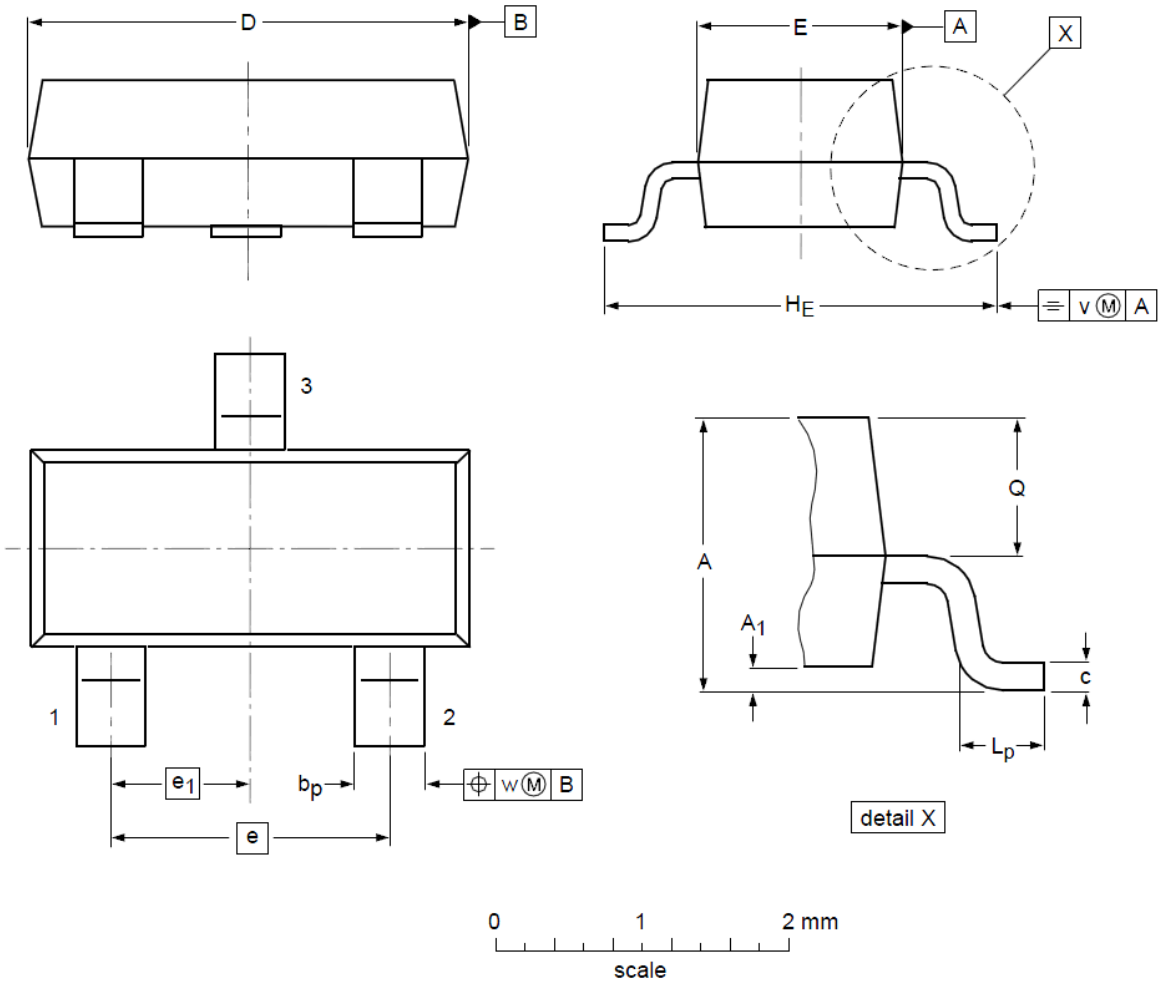

DIMENSIONS (unit : mm)

Symbol	Min	Typ	Max	Symbol	Min	Typ	Max
A	0.90	1.01	1.15	**A_1**	0.01	0.05	0.10
b_p	0.30	0.42	0.50	**c**	0.08	0.13	0.15
D	2.80	2.92	3.00	**E**	1.20	1.33	1.40
e	--	1.90	--	**e_1**	--	0.95	--
H_E	2.25	2.40	2.55	**L_p**	0.30	0.42	0.50
Q	0.45	0.49	0.55	**v**	--	0.20	--
w	--	0.10	--				

ENTEGRECİ

Bu belge www.entegreci.com üzerinden sunulmaktadır.

Elektronik komponent tedarikinde Entegreci

Entegreci, Eskişehir merkezli, Türkiye geneline satış yapan bir elektronik komponent mağazasıdır. Entegreler (IC), mikrodenetleyiciler, transistörler, diyotlar, pasif elemanlar, konnektörler, modüller ve geliştirme kartları tek adetten seri üretim adetlerine kadar satılır. Ürün sayfalarında güncel stok durumunu, fiyatı ve datasheet bağlantısını bulabilirsiniz.

Parça koduyla arama

Üretici parça numarasını yazın; stok ve fiyatı hemen görün.

www.entegreci.com

Ürün kategorileri

Entegreden kapasitöre tüm elektronik komponent kategorileri.

Kategorilere göz atın

Üreticiler

Aradığınız üreticinin ürünlerini tek sayfada inceleyin.

Üreticileri görün

Toplu alım ve teklif

Listede olmayan ya da yüksek adetli parçalar için teklif isteyin.

Teklif isteyin

www.entegreci.com | **destek@entegreci.com** | **0850 305 90 34**

Entegreci is an online electronic components store based in Türkiye. Search by manufacturer part number to see stock, prices and datasheets for integrated circuits, microcontrollers, transistors, passive components and connectors, or request a quote for parts that are not listed.

Bu sayfa Entegreci tarafından eklenmiştir. Belgenin önceki sayfaları asıl yayıncısına aittir ve içeriği değiştirilmemiştir; en güncel sürüm için belgenin yayıncısına başvurun.