# UMW IRLL110TR

100V N-Channel MOSFET

## 1.Description

The SOT-223 package is designed for surface-mounting using vapor phase, infrared, or wave soldering techniques.Its unique package design allows for easy automatic pick-and-place as with other SOT or SOIC packages but has the added advantage of improved thermal performance due to an enlarged tab for heatsinking.

## 2.Features

- $V_{DS\ (V)}$=100V
- $R_{DS(ON)}$<54mΩ($V_{GS}$=5V)
- $R_{DS(ON)}$<76mΩ($V_{GS}$=4V)

## 3.Pinning information

| Pin | Symbol | Description |
|---|---|---|
| 1 | G | GATE |
| 2,4 | D | DRAIN |
| 3 | S | SOURCE |

**SOT-223 top view**

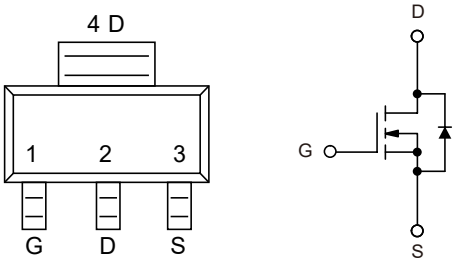


## 4.Absolute Maximum Ratings $T_C$=25°C unless otherwise noted

| Parameter | | Symbol | Rating | Units |
|---|---|---|---|---|
| Drain-Source Voltage | | $V_{DS}$ | 100 | V |
| Gate-Source Voltage | | $V_{GS}$ | ±10 | V |
| Continuous Drain Current($V_{GS}$ at 5V) | $T_C$=25°C | $I_D$ | 1.5 | A |
| | $T_C$=100°C | | 0.93 | A |
| Pulsed Drain Current [a] | | $I_{DM}$ | 12 | A |
| Linear Derating Factor | | | 0.025 | W/°C |
| Linear Derating Factor (PCB Mount) [e] | | | 0.017 | W/°C |
| Single Pulse Avalanche Energy [b] | | $E_{AS}$ | 50 | mJ |
| Repetitive Avalanche Current [a] | | $I_{AR}$ | 1.5 | A |
| Repetitive Avalanche Energy [a] | | $E_{AR}$ | 0.31 | mJ |
| Maximum Power Dissipation | $T_C$=25°C | $P_D$ | 3.1 | W |
| Maximum Power Dissipation (PCB Mount) [e] | $T_A$=25°C | | 2 | W |

| | | | | |
|---|---|---|---|---|
| Peak Diode Recovery dV/dt [c] | | dv/dt | 5.5 | V/ns |
| Junction and Storage Temperature Range | | $T_J$, $T_{STG}$ | -55 to 150 | °C |
| Soldering Recommendations (Peak Temperature) [d] | for 10 s | | 300 | °C |

Notes:

a. Repetitive rating; pulse width limited by maximum junction temperature (see fig. 11).

b. $V_{DD}$=25 V, starting $T_J$=25°C, L=25mH, $R_g$=25Ω, $I_{AS}$=1.5A (see fig. 12).

c. $I_{SD}$ ≤5.6A, dI/dt ≤75A/μs, $V_{DD}$ ≤ $V_{DS}$, $T_J$≤ 150 °C.

d. 1.6 mm from case.

e. When mounted on 1" square PCB (FR-4 or G-10 material).

## 5.Thermal resistance rating

| Parameter | Symbol | Typ | Max | Units |
|---|---|---|---|---|
| Maximum Junction-to-Ambient (PCB Mount) [a] | $R_{thJA}$ | | 60 | °C/W |
| Maximum Junction-to-Case (Drain) | $R_{thJC}$ | | 40 | °C/W |

Notes:

a. When mounted on 1" square PCB (FR-4 or G-10 material).

## 6.Electrical Characteristics $T_J$=25°C

| Parameter | Symbol | Conditions | Min | Typ | Max | Units |
|---|---|---|---|---|---|---|
| Drain-Source Breakdown Voltage | $V_{DS}$ | $I_D$=250μA, $V_{GS}$=0V | 100 | | | V |
| $V_{DS}$ Temperature Coefficient | $\Delta V_{DS}/T_J$ | $I_D$=1mA,Reference to 25°C | | 0.12 | | V/°C |
| Gate-Source Threshold Voltage | $V_{GS(th)}$ | $V_{DS}$=$V_{GS}$, $I_D$=250μA | 1 | | 2 | V |
| Gate-Source Leakage | $I_{GSS}$ | $V_{GS}$=±10V | | | ±100 | nA |
| Zero Gate Voltage Drain Current | $I_{DSS}$ | $V_{DS}$=100V, $V_{GS}$=0V | | | 25 | μA |
| | | $V_{DS}$=80V,$V_{GS}$=0V,$T_J$=125°C | | | 250 | μA |
| Drain-Source On-State Resistance | $R_{DS(ON)}$ | $V_{GS}$=5V, $I_D$=0.9A [b] | | | 54 | mΩ |
| | | $V_{GS}$=4V, $I_D$=0.75A [b] | | | 76 | mΩ |
| Forward Transconductance | $g_{FS}$ | $V_{DS}$=25V, $I_D$=0.9A | 0.57 | | | S |
| Input Capacitance | $C_{iss}$ | $V_{GS}$=0V, $V_{DS}$=25V f=1MHz, see fig. 5 | | 250 | | pF |
| Output Capacitance | $C_{oss}$ | | | 80 | | pF |
| Reverse Transfer Capacitance | $C_{rss}$ | | | 15 | | pF |
| Total Gate Charge | $Q_g$ | $V_{GS}$=5V, $I_D$=5.6A $V_{DS}$=80V see fig. 6 and 13 [b] | | | 6.1 | nC |
| Gate-Source Charge | $Q_{gs}$ | | | | 2.6 | nC |
| Gate-Drain Charge | $Q_{gd}$ | | | | 3.3 | nC |
| Turn-On Delay Time | $t_{D(on)}$ | $V_{DD}$=50V, $I_D$=5.6A $R_G$=12Ω, $R_D$=8.4Ω | | 9.3 | | ns |
| Rise Time | $t_r$ | | | 47 | | ns |
| Turn-Off Delay Time | $t_{D(off)}$ | | | 16 | | ns |
| Fall Time | $t_f$ | | | 18 | | ns |
| Internal Drain inductance | $L_D$ | Between lead,6mm (0.25in.) from package and centerof die contact | | 4 | | nH |
| Internal Source inductance | $L_S$ | | | 6 | | nH |

| Source-Drain Ratings and Characteristics | | | | | | |
|---|---|---|---|---|---|---|
| Continuous Source Current (Body Diode) | $I_S$ | MOSFET symbol showing the integral reverse p-n junction diode. | | | 1.5 | A |
| Pulsed Source Current (Body Diode) [a] | $I_{SM}$ | | | | 12 | A |
| Diode Forward Voltage | $V_{SD}$ | $T_J$=25°C,$I_S$=1.5A,$V_{GS}$=0V [b] | | | 2.5 | V |
| Reverse Recovery Time | $t_{rr}$ | $T_J$=25°C, $I_F$=5.6A | | 110 | 130 | ns |
| Reverse Recovery Charge | $Q_{rr}$ | dI/dt=100A/μs [b] | | 0.5 | 0.65 | μC |
| Forward Turn-On Time | $t_{on}$ | Intrinsic turn-on time is negligible (turn-on is dominated by $L_S$+$L_D$) | | | | |

Notes:

a. Repetitive rating; pulse width limited by maximum junction temperature

b. Pulse width ≤ 300 μs; duty cycle ≤ 2 %.

## 7.1Typical Characterisitics

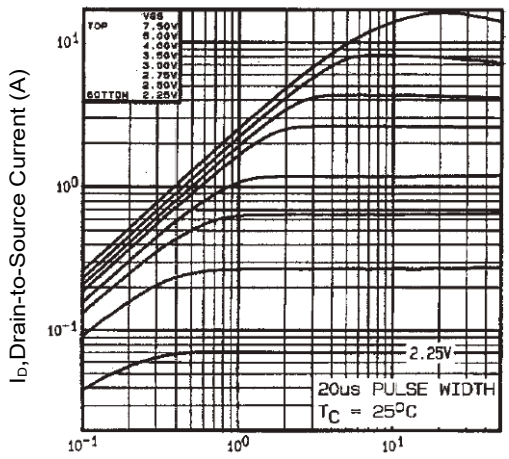


Fig 1. Typical Output Characteristics

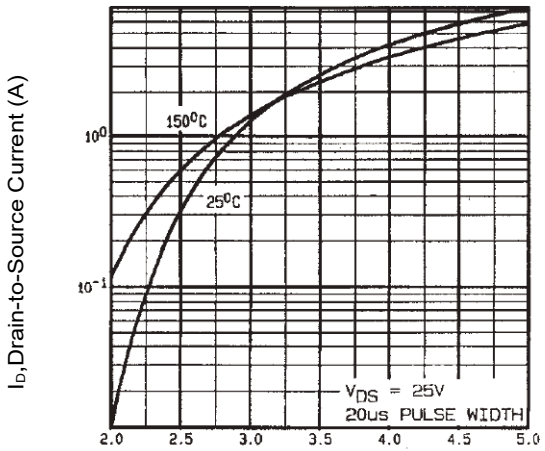


Fig 2. Typical Output Characteristics

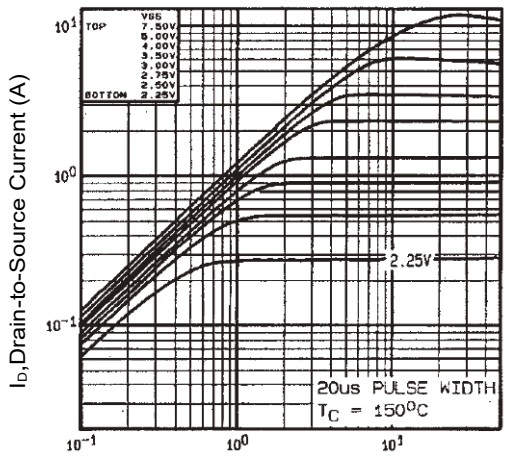


Fig 3. Typical Transfer Characteristics

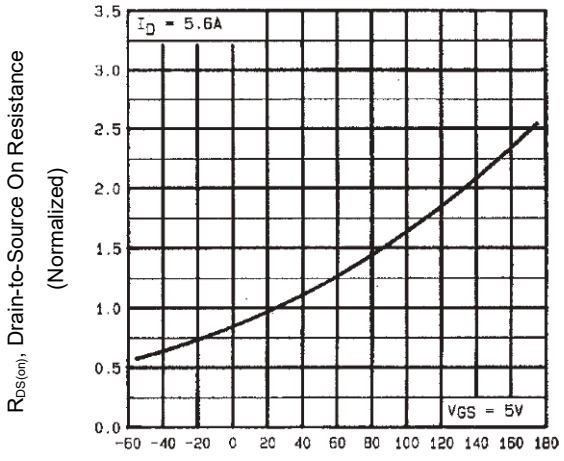


Fig 4. Nomalized On-ResistanceVs. Temperature

## 7.2Typical Characterisitics

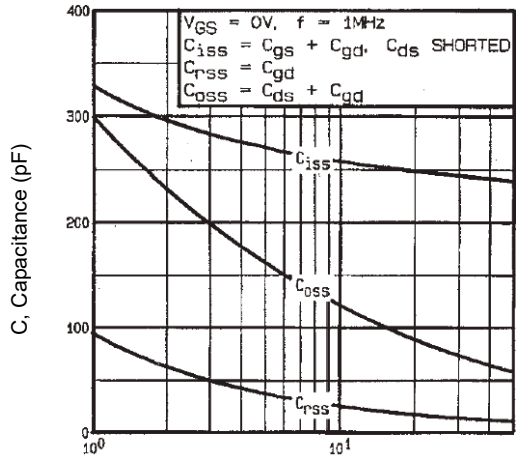


$V_{DS}$, Drain to Source Voltage (V)

Fig 5. Capacitance vs $V_{DS}$

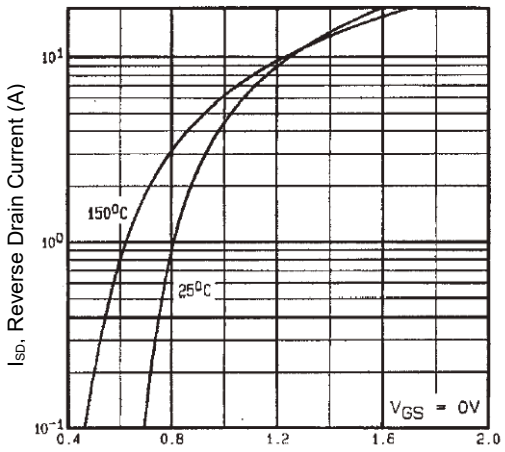


$V_{SD}$, Source-to-Drain Voltage (V)

Fig 6. Typical Gate Charge Vs. Gate-to-Source Voltage

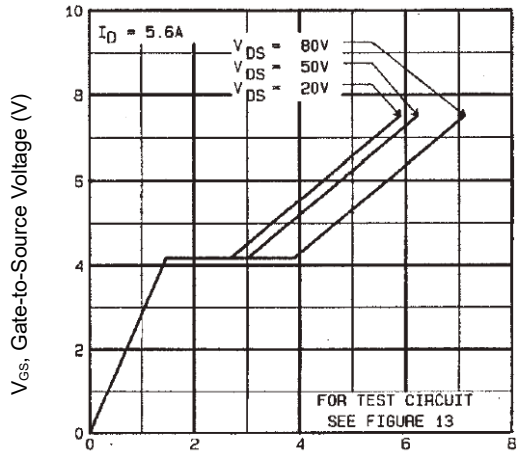


$Q_G$, Total Gate Charge (nC)

Fig 7. Typical Source-Drain Diode Forward Voltage

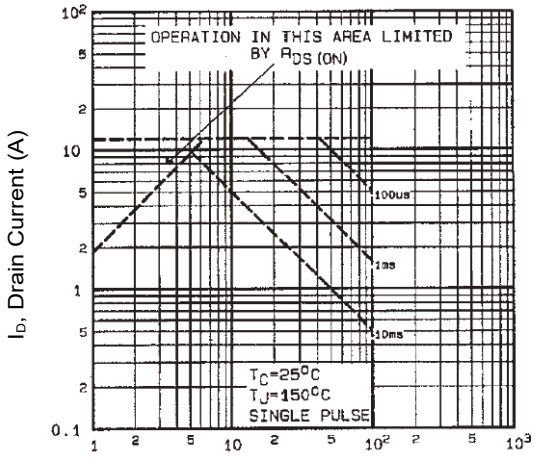


$V_{DS}$, Drain-to-Source Voltage (V)

Fig 8. Maximum Safe Operating Area

## 7.3Typical Characterisitics

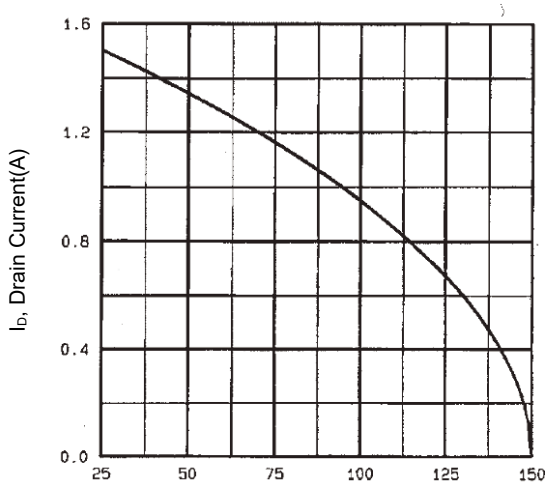


Fig 9. Maximum Drain Current vs. Ambient Temperature

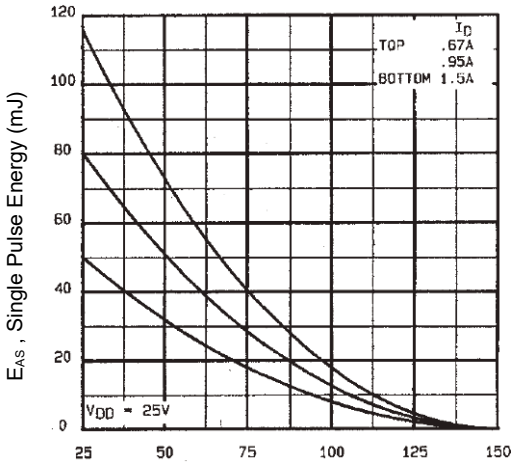


Fig 10. Maximum Avalanche Energy vs. Drain Current

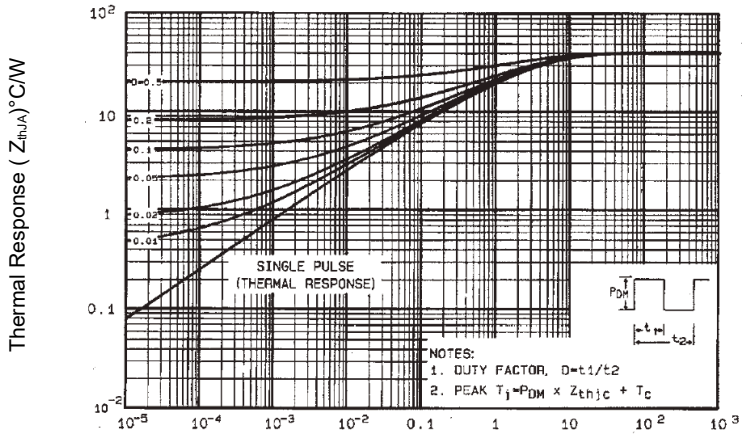


Fig 11. Maximum Effective Transient Thermal Impedance, Junction-to-Case

## 7.4Typical Characterisitics

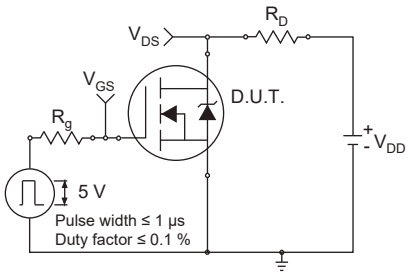


Figure 12a: Switching Time Test Circuit

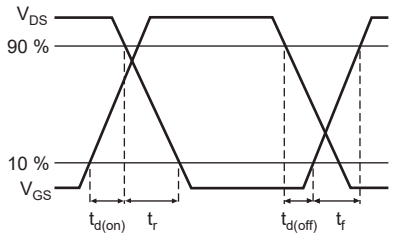


Figure 12b: Switching Time Waveforms

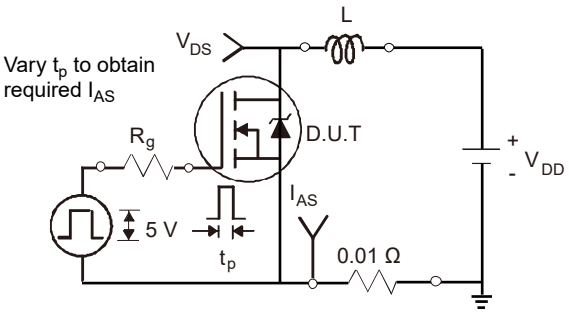


Figure 13a: Unclamped Inductive Test Circuit

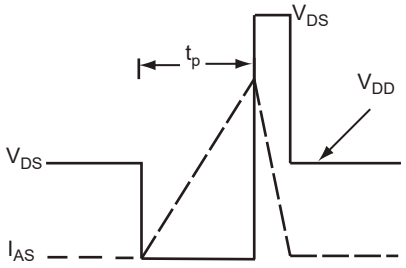


Figure 13b: Unclamped Inductive Waveforms

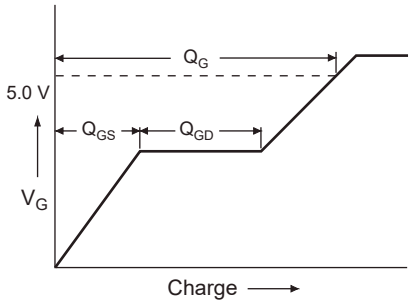


Figure 14a: Basic Gate Charge Waveform

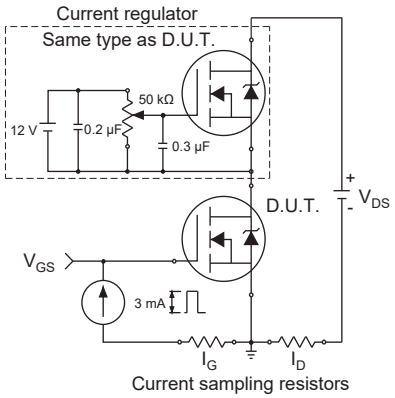


Figure 14b: Gate Charge Test Circuit

## 8.SOT-223 Package Outline Dimensions

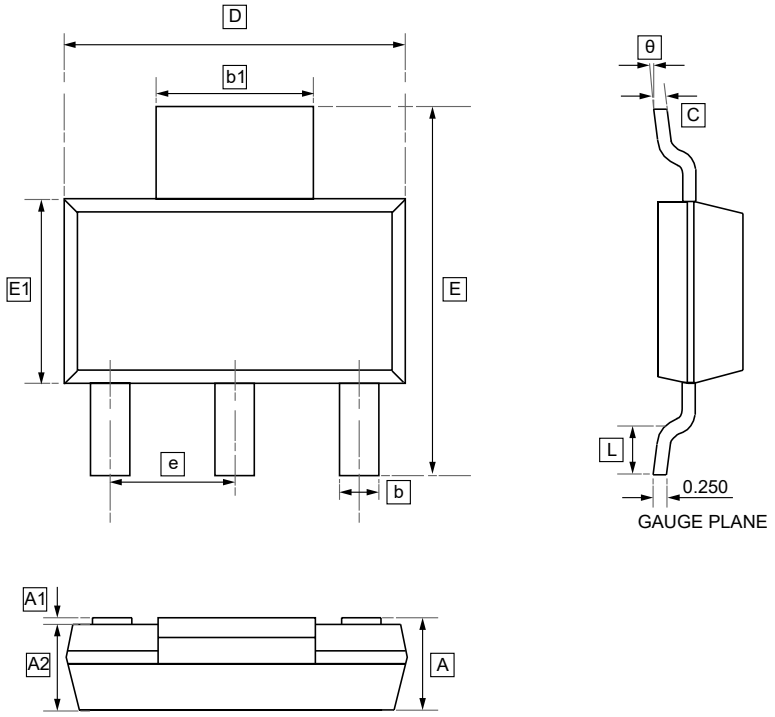


**DIMENSIONS (mm are the original dimensions)**

| Symbol | A | A1 | A2 | b | b1 | c | D | E | E1 | e | L | θ |
|---|---|---|---|---|---|---|---|---|---|---|---|---|
| **Min** | - | 0.020 | 1.500 | 0.660 | 2.900 | 0.230 | 6.300 | 6.700 | 3.300 | 2.300 | 0.750 | 0° |
| **Max** | 1.800 | 0.100 | 1.700 | 0.840 | 3.100 | 0.350 | 6.700 | 7.300 | 3.700 | BSC | - | 10° |

## 9.Ordering information

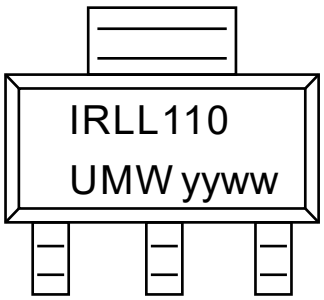


yy: Year Code
ww: Week Code

| Order Code | Package | Base QTY | Delivery Mode |
|---|---|---|---|
| UMW IRLL110TR | SOT-223 | 2500 | Tape and reel |

## 10.Disclaimer

UMW reserves the right to make changes to all products, specifications. Customers should obtain the latest version of product documentation and verify the completeness and currency of the information before placing an order.

When applying our products, please do not exceed the maximum rated values, as this may affect the reliability of the entire system. Under certain conditions, any semiconductor product may experience faults or failures. Buyers are responsible for adhering to safety standards and implementing safety measures during system design, prototyping, and manufacturing when using our products to prevent potential failure risks that could lead to personal injury or property damage.

Unless explicitly stated in writing, UMW products are not intended for use in medical, life-saving, or life-sustaining applications, nor for any other applications where product failure could result in personal injury or death. If customers use or sell the product for such applications without explicit authorization, they assume all associated risks.

When reselling, applying, or exporting, please comply with export control laws and regulations of China, the United States, the United Kingdom, the European Union, and other relevant countries, regions, and international organizations.

This document and any actions by UMW do not grant any intellectual property rights, whether express or implied, by estoppel or otherwise. The product names and marks mentioned herein may be trademarks of their respective owners.

ENTEGRECİ

Bu belge www.entegreci.com üzerinden sunulmaktadır.

# Elektronik komponent tedarikinde Entegreci

Entegreci, Eskişehir merkezli, Türkiye geneline satış yapan bir elektronik komponent mağazasıdır. Entegreler (IC), mikrodenetleyiciler, transistörler, diyotlar, pasif elemanlar, konnektörler, modüller ve geliştirme kartları tek adetten seri üretim adetlerine kadar satılır. Ürün sayfalarında güncel stok durumunu, fiyatı ve datasheet bağlantısını bulabilirsiniz.

### Parça koduyla arama

Üretici parça numarasını yazın; stok ve fiyatı hemen görün.

**www.entegreci.com**

### Ürün kategorileri

Entegreden kapasitöre tüm elektronik komponent kategorileri.

**Kategorilere göz atın**

### Üreticiler

Aradığınız üreticinin ürünlerini tek sayfada inceleyin.

**Üreticileri görün**

### Toplu alım ve teklif

Listede olmayan ya da yüksek adetli parçalar için teklif isteyin.

**Teklif isteyin**

**www.entegreci.com** | **destek@entegreci.com** | **0850 305 90 34**

Entegreci is an online electronic components store based in Türkiye. Search by manufacturer part number to see stock, prices and datasheets for integrated circuits, microcontrollers, transistors, passive components and connectors, or request a quote for parts that are not listed.

Bu sayfa Entegreci tarafından eklenmiştir. Belgenin önceki sayfaları asıl yayıncısına aittir ve içeriği değiştirilmemiştir; en güncel sürüm için belgenin yayıncısına başvurun.