60V, 30A N-CHANNEL POWER MOSFET

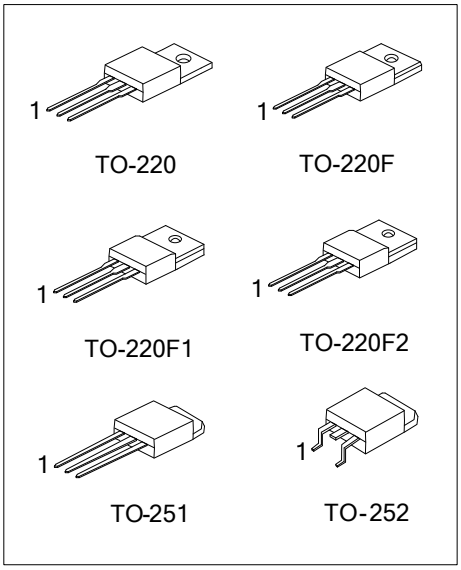

■ DESCRIPTION

The UTC **30N06** is a low voltage power MOSFET and is designed to have better characteristics, such as fast switching time, low gate charge, low on-state resistance and excellent avalanche characteristics. This power MOSFET is usually used at automotive applications in power supplies, high efficient DC to DC converters and battery operated products.

■ FEATURES

* $R_{DS(ON)}$ = 40mΩ@V_{GS} = 10 V, I_D=15A
* Ultra low gate charge (typical 20nC)
* Low reverse transfer Capacitance (C_{RSS} = typical 80 pF)
* Fast switching capability
* Avalanche energy specified
* Improved dv/dt capability

■ SYMBOL

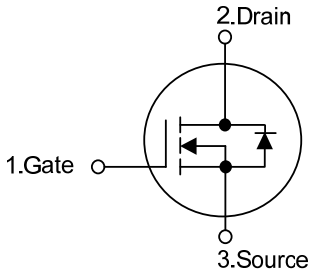

■ ORDERING INFORMATION

Ordering Number		Package	Pin Assignment			Packing
Lead Free	Halogen Free		1	2	3	
30N06L-TA3-T	30N06G-TA3-T	TO-220	G	D	S	Tube
30N06L-TF1-T	30N06G-TF1-T	TO-220F1	G	D	S	Tube
30N06L-TF2-T	30N06G-TF2-T	TO-220F2	G	D	S	Tube
30N06L-TF3-T	30N06G-TF3-T	TO-220F	G	D	S	Tube
30N06L-TM3-T	30N06G-TM3-T	TO-251	G	D	S	Tube
30N06L-TN3-T	30N06G-TN3-T	TO-252	G	D	S	Tube
30N06L-TN3-R	30N06G-TN3-R	TO-252	G	D	S	Tape Reel

Note: Pin Assignment: G: Gate D: Drain S: Source

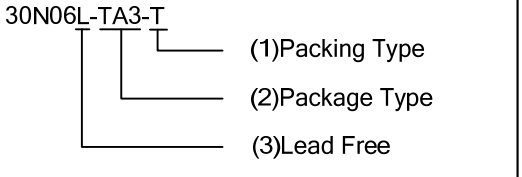

(1) T: Tube, R: Tape Reel
(2) TA3: TO-220, TF1: TO-220F1, TF2: TO-220F2
TF3: TO-220F, TM3: TO-251, TN3: TO-252
(3) L: Lead Free, G: Halogen Free

Copyright © 2013 Unisonic Technologies Co., Ltd

■ ABSOLUTE MAXIMUM RATINGS(T_C = 25°C, unless otherwise specified)

PARAMETER		SYMBOL	RATINGS	UNIT
Drain-Source Voltage		V_{DSS}	60	V
Gate to Source Voltage		V_{GSS}	±20	V
Continuous Drain Current	T_C = 25°C	I_D	30	A
	T_C = 100°C		21.3	A
Pulsed Drain Current (Note 2)		I_{DM}	120	A
Avalanche Energy	Single Pulsed (Note 3)	E_{AS}	300	mJ
	Repetitive (Note 2)	E_{AR}	8	mJ
Power Dissipation	TO-220	P_D	79	W
	TO-220F/ TO-220F2 TO-220F1		45	
	TO-251/TO-252		46	
Junction Temperature		T_J	+150	°C
Operation Temperature		T_{OPR}	-55 ~ +150	°C
Storage Temperature		T_{STG}	-55 ~ +150	°C

Note: 1. Absolute maximum ratings are those values beyond which the device could be permanently damaged. Absolute maximum ratings are stress ratings only and functional device operation is not implied.
2. Repeativity rating: pulse width limited by junction temperature
3. L=0.66mH, I_{AS}=30A, V_{DD}=25V, R_G=20Ω, Starting T_J=25°C

■ THERMAL DATA

PARAMETER		SYMBOL	RATING	UNIT
Junction to Ambient	TO-220	θ_{JA}	62	°C/W
	TO-220F/ TO-220F2 TO-220F1		62.5	
	TO-251/TO-252		110	
Junction to Case	TO-220	θ_{JC}	1.9	°C/W
	TO-220F/ TO-220F2 TO-220F1		2.7	
	TO-251/TO-252		2.85	

■ ELECTRICAL CHARACTERISTICS (T_C = 25°C, unless otherwise specified)

PARAMETER		SYMBOL	TEST CONDITIONS	MIN	TYP	MAX	UNIT
OFF CHARACTERISTICS							
Drain-Source Breakdown Voltage		BV_{DSS}	V_{GS} = 0 V, I_D = 250 μA	60			V
Drain-Source Leakage Current		I_{DSS}	V_{DS} = 60 V, V_{GS} = 0 V			10	μA
Gate-Source Leakage Current	Forward	I_{GSS}	V_{GS} = 20V, V_{DS} = 0 V			100	nA
	Reverse		V_{GS} = -20V, V_{DS} = 0 V			-100	nA
Breakdown Voltage Temperature Coefficient		$\triangle BV_{DSS}/\triangle T_J$	I_D =250μA, Referenced to 25°C		0.06		V/°C
ON CHARACTERISTICS							
Gate Threshold Voltage		$V_{GS(TH)}$	V_{DS} = V_{GS}, I_D = 250 μA	2.0		4.0	V
Static Drain-Source On-State Resistance		$R_{DS(ON)}$	V_{GS} = 10 V, I_D = 15 A		32	40	mΩ
DYNAMIC CHARACTERISTICS							
Input Capacitance		C_{ISS}	V_{GS} = 0 V, V_{DS} = 25 V, f = 1MHz		800		pF
Output Capacitance		C_{OSS}			300		pF
Reverse Transfer Capacitance		C_{RSS}			50		pF
SWITCHING CHARACTERISTICS							
Turn-On Delay Time		$t_{D(ON)}$	V_{DD} = 30V, I_D =15 A, V_{GS}=10V (Note 1, 2)		52		ns
Turn-On Rise Time		t_R			96		ns
Turn-Off Delay Time		$t_{D(OFF)}$			124		ns
Turn-Off Fall Time		t_F			84		ns
Total Gate Charge		Q_G	V_{DS} = 60V, V_{GS} = 10 V, I_D = 24A (Note 1, 2)		20	30	nC
Gate-Source Charge		Q_{GS}			6		nC
Gate-Drain Charge		Q_{GD}			9		nC
SOURCE-DRAIN DIODE RATINGS AND CHARACTERISTICS							
Drain-Source Diode Forward Voltage		V_{SD}	V_{GS} = 0 V, I_S = 30A			1.4	V
Maximum Continuous Drain-Source Diode Forward Current		I_S				30	A
Maximum Pulsed Drain-Source Diode Forward Current		I_{SM}				120	A

Notes: 1. Pulse Test : Pulse width ≤300μs, Duty cycle ≤ 2%
2. Essentially independent of operating temperature.

■ TEST CIRCUITS AND WAVEFORMS

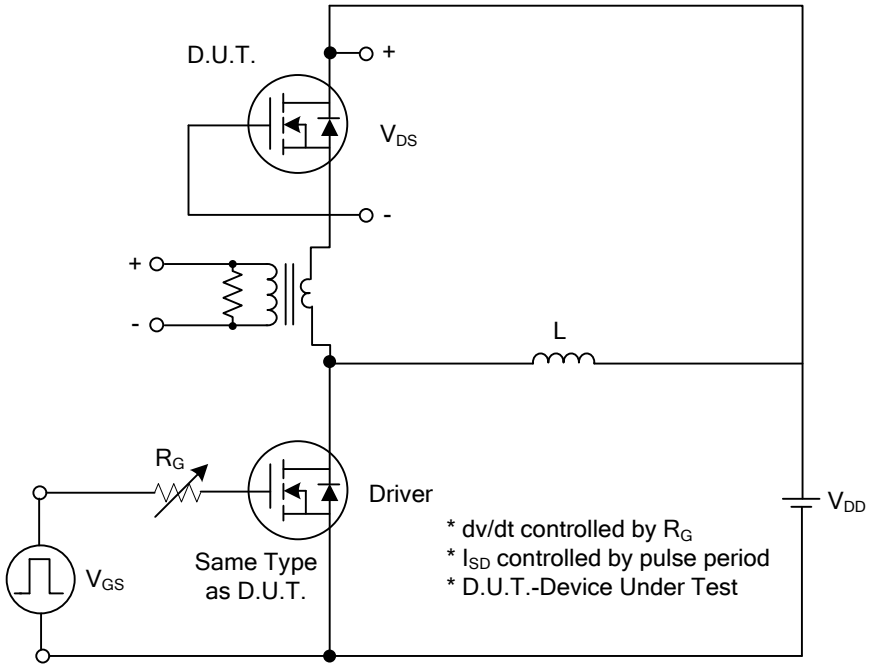

Peak Diode Recovery dv/dt Test Circuit

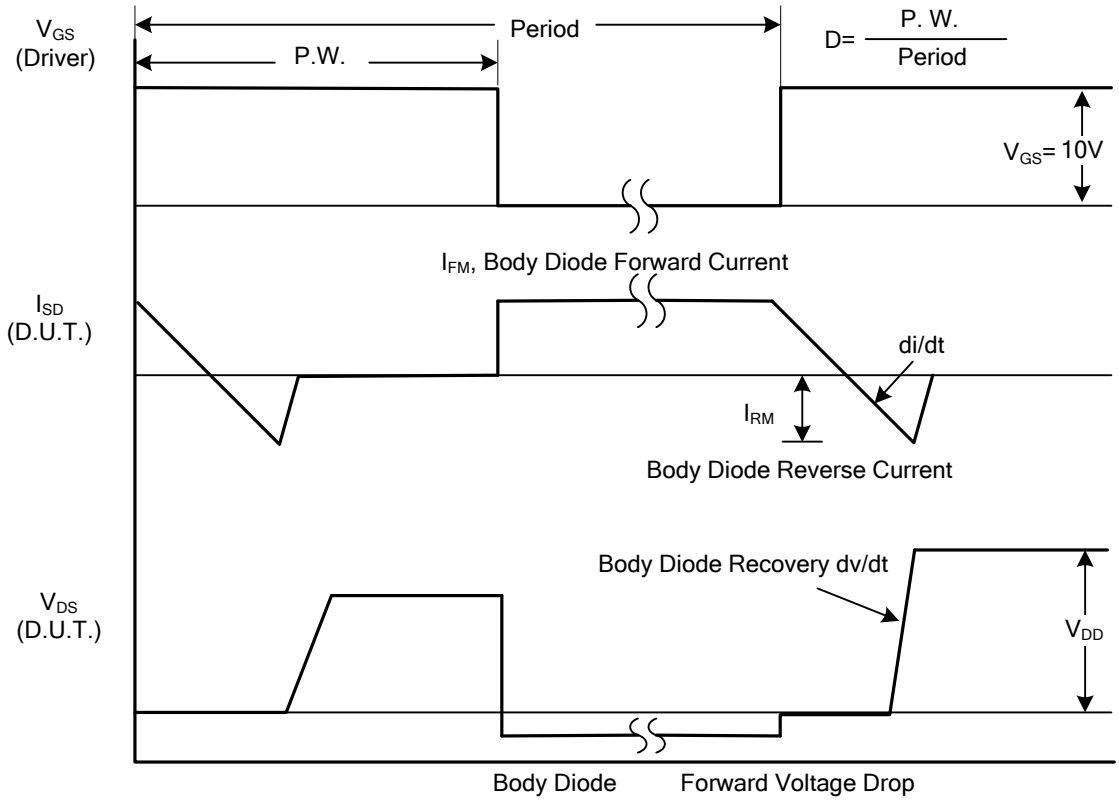

Peak Diode Recovery dv/dt Waveforms

■ TEST CIRCUITS AND WAVEFORMS (Cont.)

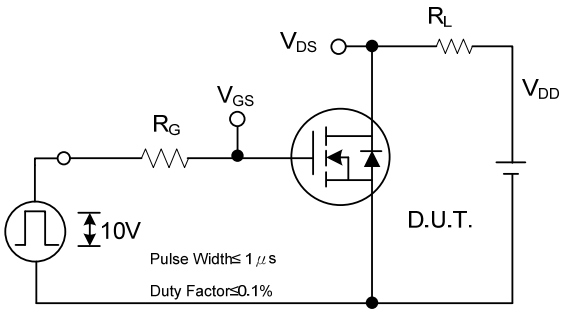

Switching Test Circuit

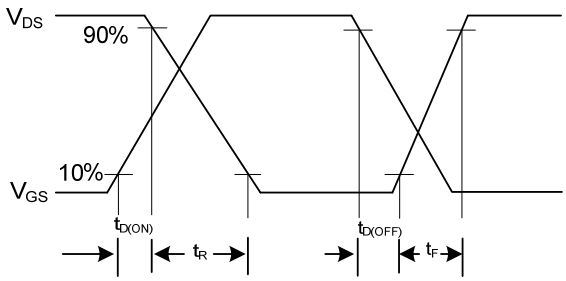

Switching Waveforms

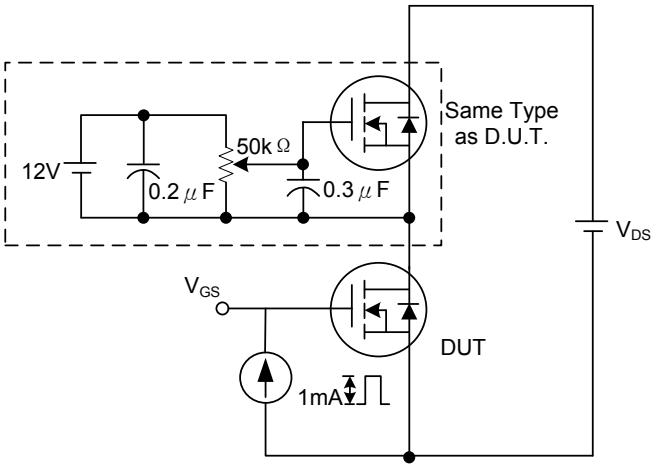

Gate Charge Test Circuit

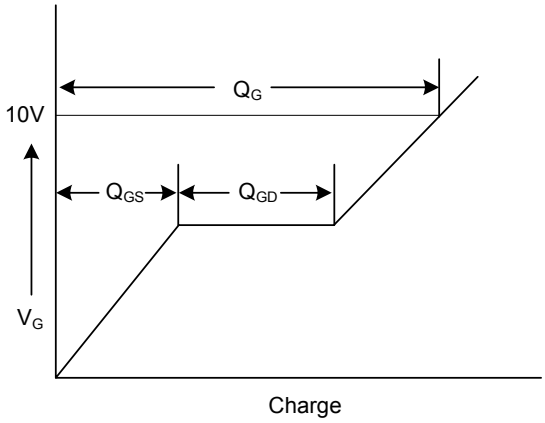

Gate Charge Waveform

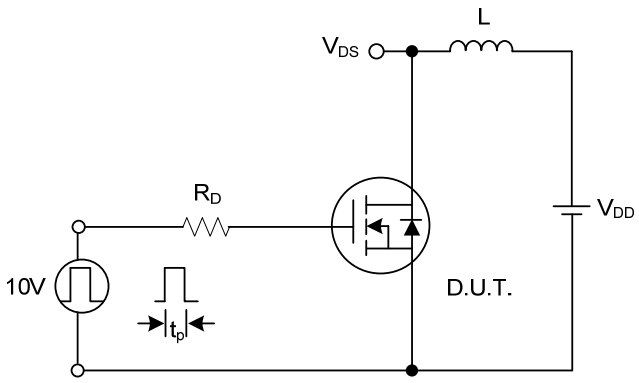

Unclamped Inductive Switching Test Circuit

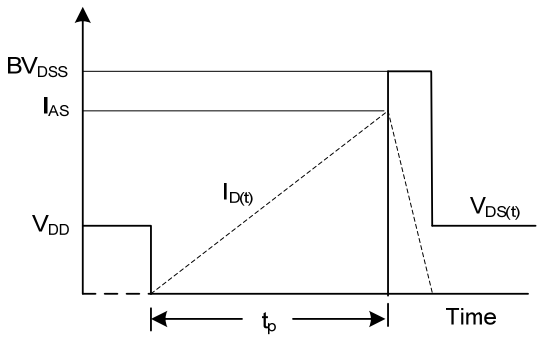

Unclamped Inductive Switching Waveforms

■ TYPICAL CHARACTERISTICS

On-State Characteristics

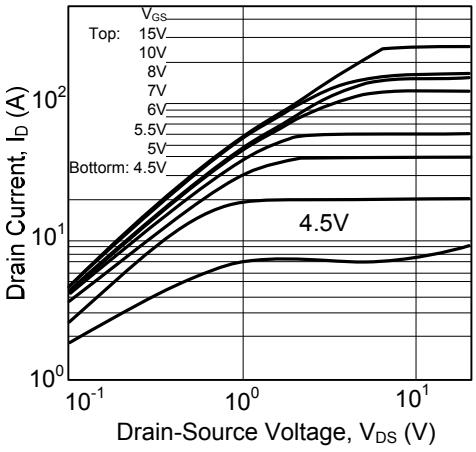

Transfer Characteristics

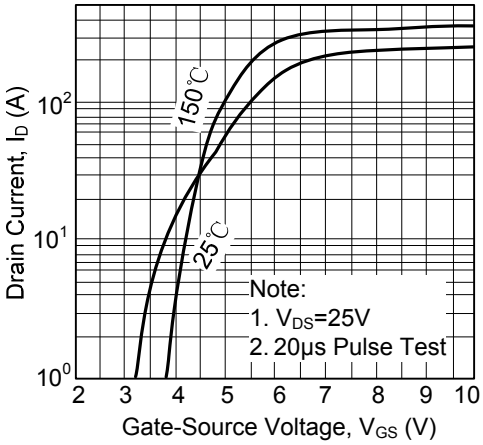

On-Resistance Variation vs. Drain Current and Gate Voltage

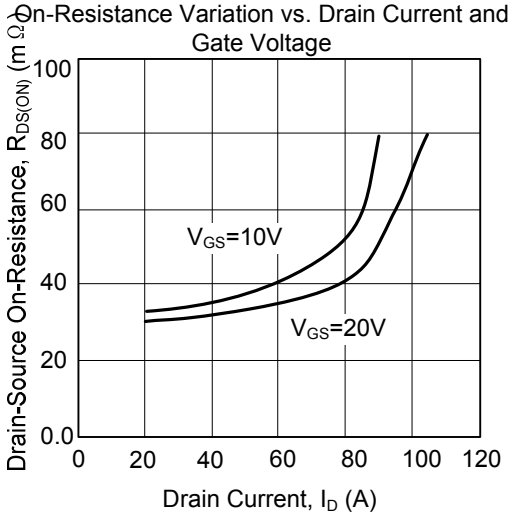

Reverse Drain Current vs. Allowable Case Temperature

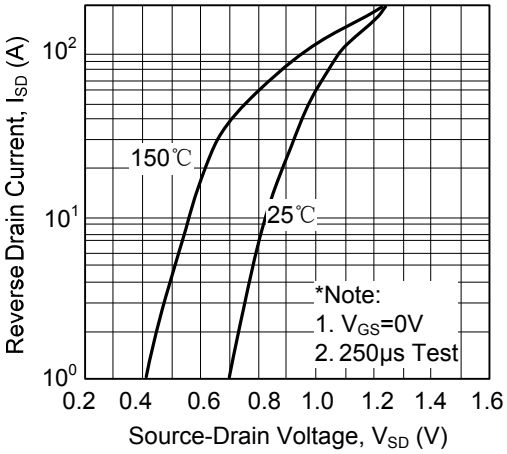

Capacitance Characteristics (Non-Repetitive)

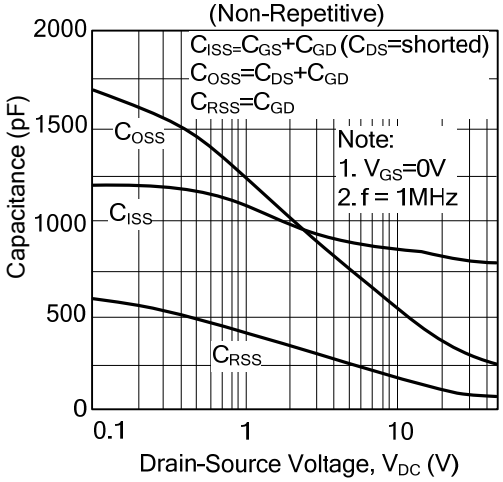

Gate Charge Characteristics

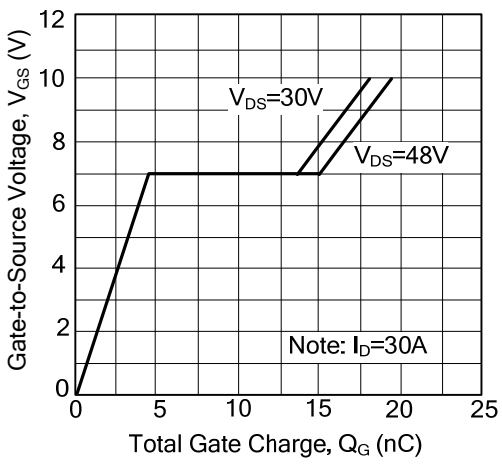

■ TYPICAL CHARACTERISTICS(Cont.)

Breakdown Voltage Variation vs. Junction Temperature

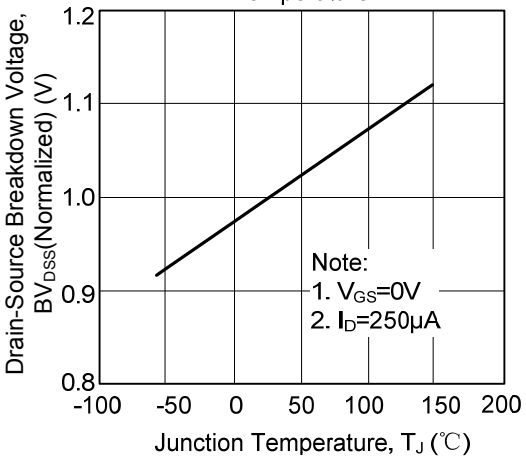

On-Resistance Variation vs. Junction Temperature

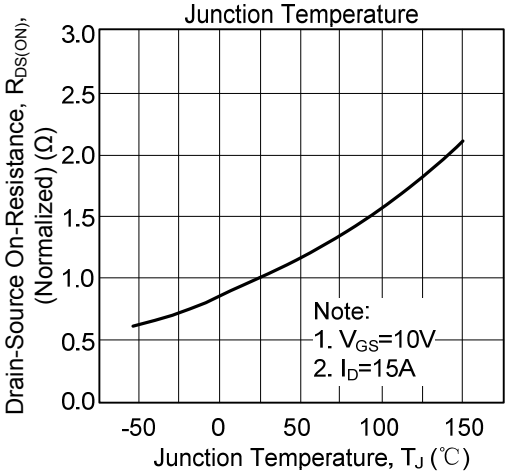

Maximum Safe Operating

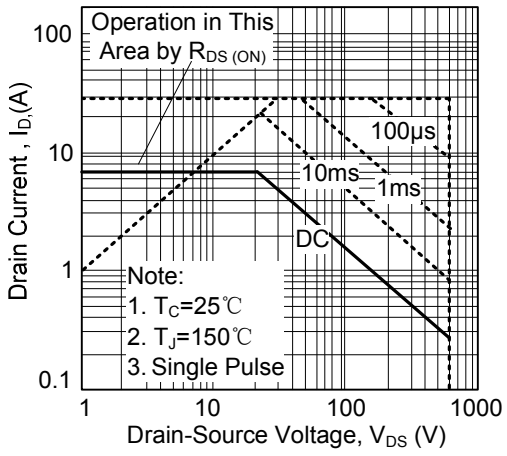

Maximum Drain Current vs. Case Temperature

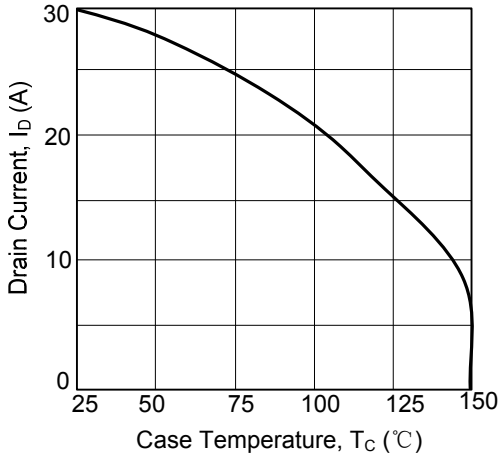

Transient Thermal Response Curve

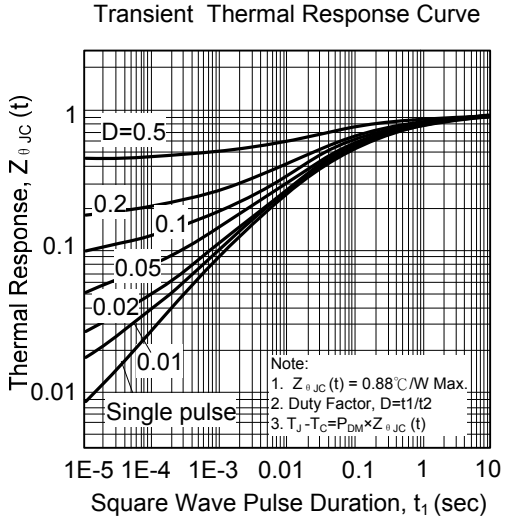

UTC assumes no responsibility for equipment failures that result from using products at values that exceed, even momentarily, rated values (such as maximum ratings, operating condition ranges, or other parameters) listed in products specifications of any and all UTC products described or contained herein. UTC products are not designed for use in life support appliances, devices or systems where malfunction of these products can be reasonably expected to result in personal injury. Reproduction in whole or in part is prohibited without the prior written consent of the copyright owner. The information presented in this document does not form part of any quotation or contract, is believed to be accurate and reliable and may be changed without notice.

ENTEGRECİ

Bu belge www.entegreci.com üzerinden sunulmaktadır.

Elektronik komponent tedarikinde Entegreci

Entegreci, Eskişehir merkezli, Türkiye geneline satış yapan bir elektronik komponent mağazasıdır. Entegreler (IC), mikrodenetleyiciler, transistörler, diyotlar, pasif elemanlar, konnektörler, modüller ve geliştirme kartları tek adetten seri üretim adetlerine kadar satılır. Ürün sayfalarında güncel stok durumunu, fiyatı ve datasheet bağlantısını bulabilirsiniz.

Parça koduyla arama

Üretici parça numarasını yazın; stok ve fiyatı hemen görün.

www.entegreci.com

Ürün kategorileri

Entegreden kapasitöre tüm elektronik komponent kategorileri.

Kategorilere göz atın

Üreticiler

Aradığınız üreticinin ürünlerini tek sayfada inceleyin.

Üreticileri görün

Toplu alım ve teklif

Listede olmayan ya da yüksek adetli parçalar için teklif isteyin.

Teklif isteyin

www.entegreci.com | **destek@entegreci.com** | **0850 305 90 34**

Entegreci is an online electronic components store based in Türkiye. Search by manufacturer part number to see stock, prices and datasheets for integrated circuits, microcontrollers, transistors, passive components and connectors, or request a quote for parts that are not listed.

Bu sayfa Entegreci tarafından eklenmiştir. Belgenin önceki sayfaları asıl yayıncısına aittir ve içeriği değiştirilmemiştir; en güncel sürüm için belgenin yayıncısına başvurun.