2N7002ZDW

Power MOSFET

300mA, 60V DUAL N-CHANNEL ENHANCEMENT MODE POWER MOSFET

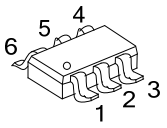

SOT-363

■ DESCRIPTION

The UTC **2N7002ZDW** uses advanced technology to provide excellent $R_{DS(ON)}$, low gate charge and low gate voltages during operation. This device is suitable for use as a load switch or in PWM applications.

■ FEATURES

* Low Reverse Transfer Capacitance (C_{RSS} = typical 3.0 pF)
* ESD Protected
* Fast Switching Capability
* Avalanche Energy Specified
* Improved dv/dt Capability, High Ruggedness

■ SYMBOL

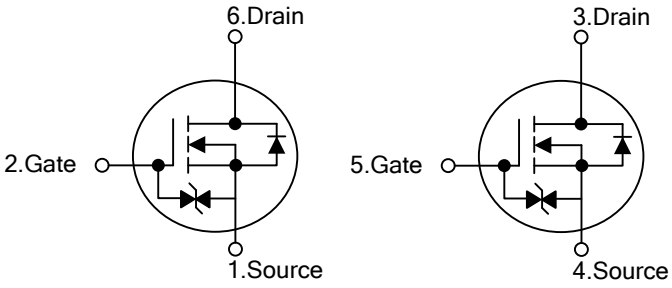

■ ORDERING INFORMATION

Ordering Number	Package	Pin Assignment						Packing
		1	2	3	4	5	6	
2N7002ZDWG-AL6-R	SOT-363	S1	G1	D2	S2	G2	D1	Tape Reel

Note: Pin Assignment: G: Gate D: Drain S: Source

2N7002ZDWG-AL6-R (1)Packing Type (2)Package Type (3)Green Package	(1) R: Tape Reel (2) AL6: SOT-363 (3) G: Halogen Free and Lead Free

■ MARKING

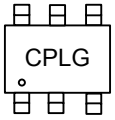

Copyright © 2014 Unisonic Technologies Co., Ltd

■ ABSOLUTE MAXIMUM RATINGS (T_A = 25°C, unless otherwise specified.)

PARAMETER		SYMBOL	RATINGS	UNIT
Drain-Source Voltage		V_{DSS}	60	V
Gate-Source Voltage		V_{GSS}	±20	V
Drain Current	Continuous	I_D	300	mA
	Pulse(Note 2)		800	
Power Dissipation		P_D	200	mW
Derating above T_A=25°C			1.6	mW/°C
Junction Temperature		T_J	+150	°C
Storage Temperature		T_{STG}	-55 ~ +150	°C

Note: Absolute maximum ratings are those values beyond which the device could be permanently damaged. Absolute maximum ratings are stress ratings only and functional device operation is not implied.

■ ELECTRICAL CHARACTERISTICS (T_A=25°C, unless otherwise specified.)

PARAMETER	SYMBOL	TEST CONDITIONS	MIN	TYP	MAX	UNIT
OFF CHARACTERISTICS						
Drain-Source Breakdown Voltage	BV_{DSS}	V_{GS}=0V, I_D=10μA	60			V
Drain-Source Leakage Current	I_{DSS}	V_{DS}=60V, V_{GS}=0V			1.0	μA
Gate-Source Leakage Current	I_{GSS}	V_{DS}=0V, V_{GS}=±20V			±10	μA
ON CHARACTERISTICS						
Gate Threshold Voltage	$V_{GS(TH)}$	V_{DS}=10V, I_D=1mA	1.0	1.85	2.5	V
Static Drain-Source On-Resistance (Note)	$R_{DS(ON)}$	V_{GS}=10V, I_D=0.3A, T_J=125°C			13.5	Ω
		V_{GS}=5V, I_D=0.05A			7.5	
DYNAMIC PARAMETERS						
Input Capacitance	C_{ISS}	V_{DS}=25V, V_{GS}=0V, f=1.0MHz		25	50	pF
Output Capacitance	C_{OSS}			10	25	pF
Reverse Transfer Capacitance	C_{RSS}			3.0	5.0	pF
SWITCHING PARAMETERS						
Turn-ON Delay Time	$t_{D(ON)}$	I_D=0.2 A, V_{DD}=30V, V_{GS}=10V, R_L=150Ω, R_G=10Ω		12	20	ns
Turn-OFF Delay Time	$t_{D(OFF)}$			20	30	ns
DRAIN-SOURCE DIODE CHARACTERISTICS AND MAXIMUM RATINGS						
Drain-Source Diode Forward Voltage	V_{SD}	V_{GS}=0V, Is=300mA (Note)		0.88	1.5	V
Maximum Pulsed Drain-Source Diode Forward Current	I_{SM}				0.8	A
Maximum Continuous Drain-Source Diode Forward Current	Is				300	mA

Note: 1. Device mounted on FR-4 PCB, 1 inch x 0.85 inch x 0.062 inch. Minimum land pad size.
2. Pulse width≦300μs, Duty cycle≦1%

■ TEST CIRCUITS AND WAVEFORMS

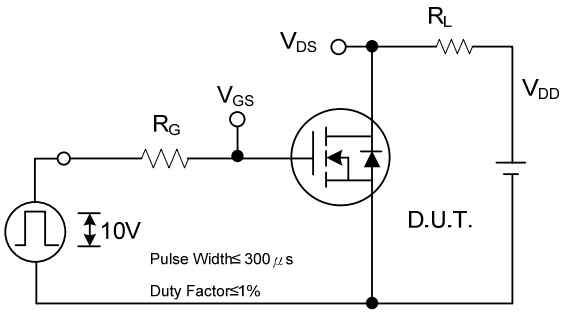

Switching Test Circuit

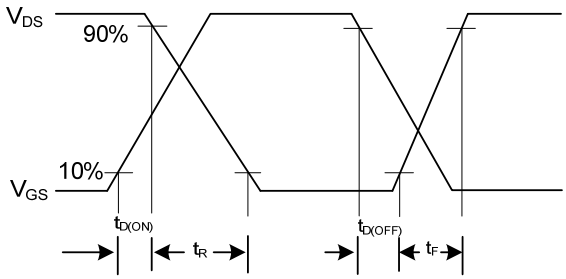

Switching Waveforms

UTC assumes no responsibility for equipment failures that result from using products at values that exceed, even momentarily, rated values (such as maximum ratings, operating condition ranges, or other parameters) listed in products specifications of any and all UTC products described or contained herein. UTC products are not designed for use in life support appliances, devices or systems where malfunction of these products can be reasonably expected to result in personal injury. Reproduction in whole or in part is prohibited without the prior written consent of the copyright owner. The information presented in this document does not form part of any quotation or contract, is believed to be accurate and reliable and may be changed without notice.

ENTEGRECİ

Bu belge www.entegreci.com üzerinden sunulmaktadır.

Elektronik komponent tedarikinde Entegreci

Entegreci, Eskişehir merkezli, Türkiye geneline satış yapan bir elektronik komponent mağazasıdır. Entegreler (IC), mikrodenetleyiciler, transistörler, diyotlar, pasif elemanlar, konnektörler, modüller ve geliştirme kartları tek adetten seri üretim adetlerine kadar satılır. Ürün sayfalarında güncel stok durumunu, fiyatı ve datasheet bağlantısını bulabilirsiniz.

Parça koduyla arama

Üretici parça numarasını yazın; stok ve fiyatı hemen görün.

www.entegreci.com

Ürün kategorileri

Entegreden kapasitöre tüm elektronik komponent kategorileri.

Kategorilere göz atın

Üreticiler

Aradığınız üreticinin ürünlerini tek sayfada inceleyin.

Üreticileri görün

Toplu alım ve teklif

Listede olmayan ya da yüksek adetli parçalar için teklif isteyin.

Teklif isteyin

www.entegreci.com | **destek@entegreci.com** | **0850 305 90 34**

Entegreci is an online electronic components store based in Türkiye. Search by manufacturer part number to see stock, prices and datasheets for integrated circuits, microcontrollers, transistors, passive components and connectors, or request a quote for parts that are not listed.

Bu sayfa Entegreci tarafından eklenmiştir. Belgenin önceki sayfaları asıl yayıncısına aittir ve içeriği değiştirilmemiştir; en güncel sürüm için belgenin yayıncısına başvurun.