2N60-LC1

Power MOSFET

2.0A, 600V N-CHANNEL POWER MOSFET

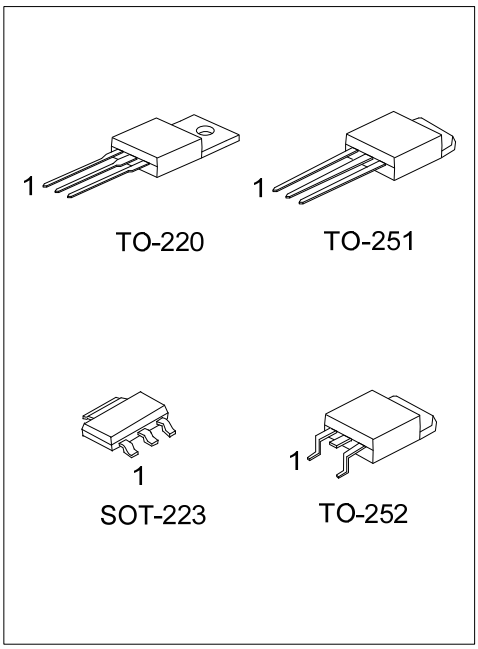

■ DESCRIPTION

The UTC **2N60-LC1** is an N-channel power MOSFET using UTC's advanced technology to provide customers with a minimum on-state resistance and superior switching performance.

The UTC **2N60-LC1** is generally applied in low power switching mode power appliances and electronic ballast.

■ FEATURES

* $R_{DS(ON)} \leq 5.0\ \Omega$ @ V_{GS}=10V, I_D=1.0A
* High Switching Speed
* 100% Avalanche Tested

■ SYMBOL

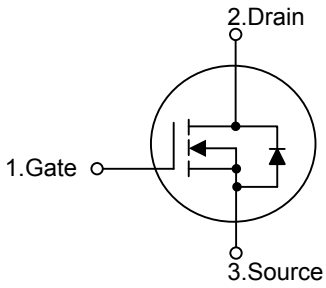

■ ORDERING INFORMATION

Ordering Number		Package	Pin Assignment			Packing
Lead Free	Halogen Free		1	2	3	
2N60L-AA3-R	2N60G-AA3-R	SOT-223	G	D	S	Tape Reel
2N60L-TA3-T	2N60G-TA3-T	TO-220	G	D	S	Tube
2N60L-TM3-T	2N60G-TM3-T	TO-251	G	D	S	Tube
2N60L-TN3-R	2N60G-TN3-R	TO-252	G	D	S	Tape Reel

Note: Pin Assignment: G: Gate D: Drain S: Source

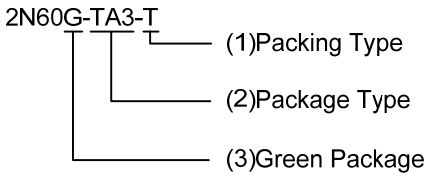

(1) R: Tape Reel, T: Tube

(2) AA3: SOT-223, TA3: TO-220, TM3: TO-251, TN3: TO-252

(3) G: Halogen Free and Lead Free, , L: Lead Free

Copyright © 2021 Unisonic Technologies Co., Ltd

■ MARKING

SOT-223	TO-220 / TO-251 / TO-252
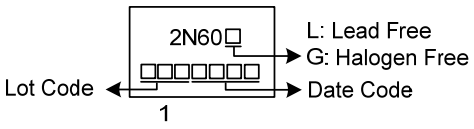	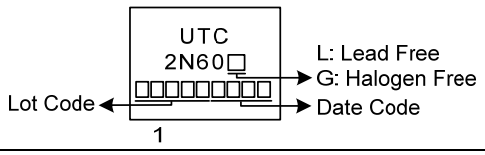

■ ABSOLUTE MAXIMUM RATINGS (T_C=25°C, unless otherwise specified)

PARAMETER		SYMBOL	RATINGS	UNIT
Drain-Source Voltage		V_{DSS}	600	V
Gate-Source Voltage		V_{GSS}	±30	V
Drain Current	Continuous	I_D	2	A
	Pulsed (Note 2)	I_{DM}	4	A
Avalanche Energy	Single Pulsed (Note 3)	E_{AS}	33.8	mJ
Peak Diode Recovery dv/dt (Note 4)		dv/dt	2.6	V/ns
Power Dissipation	SOT-223	P_D	2.3	W
	TO-220		54	W
	TO-251/TO-252		45	W
Junction Temperature		T_J	+150	°C
Storage Temperature		T_{STG}	-55 ~ +150	°C

Notes: 1. Absolute maximum ratings are those values beyond which the device could be permanently damaged. Absolute maximum ratings are stress ratings only and functional device operation is not implied.
2. Repetitive Rating: Pulse width limited by maximum junction temperature.
3. L = 10mH, I_{AS} = 2.6A, V_{DD} = 50V, R_G = 25Ω, Starting T_J = 25°C
4. I_{SD} ≤ 2.0A, di/dt ≤ 200A/μs, V_{DD} ≤ BV_{DSS}, Starting T_J = 25°C

■ THERMAL DATA

PARAMETER		SYMBOL	RATINGS	UNIT
Junction to Ambient	SOT-223	θ_{JA}	160	°C/W
	TO-220		62.5	°C/W
	TO-251/TO-252		100	°C/W
Junction to Case	SOT-223	θ_{JC}	54	°C/W
	TO-220		2.32	°C/W
	TO-251/TO-252		2.77 (Note)	°C/W

Note: Device mounted on FR-4 substrate PC board, 2oz copper, with 1inch square copper plate.

■ ELECTRICAL CHARACTERISTICS (T_J=25°C, unless otherwise specified)

PARAMETER		SYMBOL	TEST CONDITIONS	MIN	TYP	MAX	UNIT
OFF CHARACTERISTICS							
Drain-Source Breakdown Voltage		BV_{DSS}	I_D=250μA, V_{GS}=0V	600			V
Drain-Source Leakage Current		I_{DSS}	V_{DS}=600V, V_{GS}=0V			10	μA
Gate- Source Leakage Current	Forward	I_{GSS}	V_{GS}=+30V, V_{DS}=0V			+100	nA
	Reverse		V_{GS}=-30V, V_{DS}=0V			-100	nA
ON CHARACTERISTICS							
Gate Threshold Voltage		$V_{GS(TH)}$	V_{DS}=V_{GS}, I_D=250μA	2.0		4.0	V
Static Drain-Source On-State Resistance		$R_{DS(ON)}$	V_{GS}=10V, I_D=1.0A			5.0	Ω
DYNAMIC PARAMETERS							
Input Capacitance		C_{ISS}	V_{GS}=0V, V_{DS}=25V, f=1.0MHz		285		pF
Output Capacitance		C_{OSS}			30		pF
Reverse Transfer Capacitance		C_{RSS}			2.3		pF
SWITCHING PARAMETERS							
Total Gate Charge (Note 1)		Q_G	V_{DS}=480V, V_{GS}=10V, I_D=2A I_G=1mA (Note 1, 2)		7		nC
Gate to Source Charge		Q_{GS}			2.9		nC
Gate to Drain Charge		Q_{GD}			0.9		nC
Turn-ON Delay Time (Note 1)		$t_{D(ON)}$	V_{DD}=100V, V_{GS}=10V, I_D=2A, R_G=25Ω (Note 1, 2)		4		ns
Rise Time		t_R			14.5		ns
Turn-OFF Delay Time		$t_{D(OFF)}$			16		ns
Fall-Time		t_F			23.5		ns
SOURCE- DRAIN DIODE RATINGS AND CHARACTERISTICS							
Maximum Body-Diode Continuous Current		I_S				2	A
Maximum Body-Diode Pulsed Current (Note 1)		I_{SM}				4	A
Drain-Source Diode Forward Voltage (Note 1)		V_{SD}	I_S=2A, V_{GS}=0V			1.4	V
Body Diode Reverse Recovery Time		t_{rr}	I_S=2A, V_{GS}=0V, dI_F/dt=100A/μs		285		ns
Body Diode Reverse Recovery Charge		Q_{rr}			1		μC

Notes: 1. Pulse Test: Pulse width ≤ 300μs, Duty cycle ≤ 2%.
2. Essentially independent of operating temperature.

■ TEST CIRCUITS AND WAVEFORMS

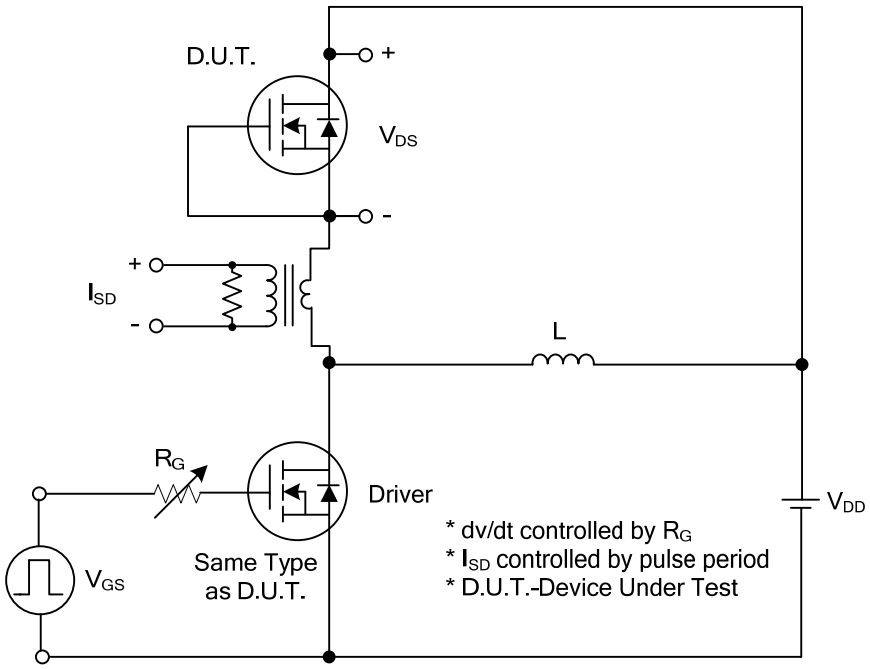

Peak Diode Recovery dv/dt Test Circuit

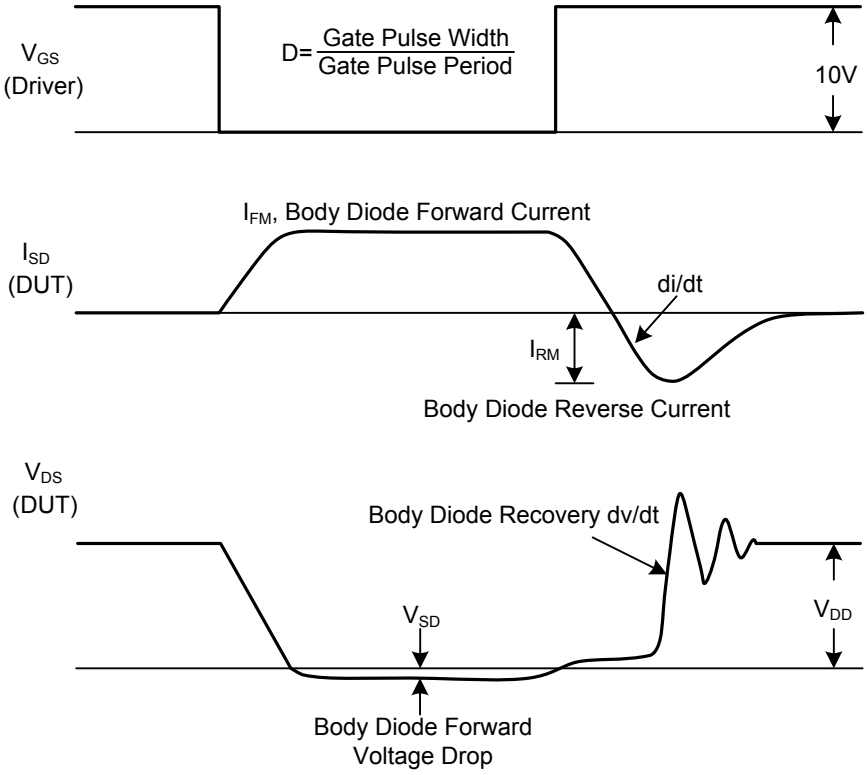

Peak Diode Recovery dv/dt Waveforms

■ TEST CIRCUITS AND WAVEFORMS

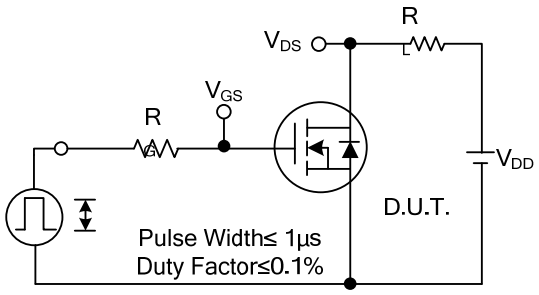

Switching Test Circuit

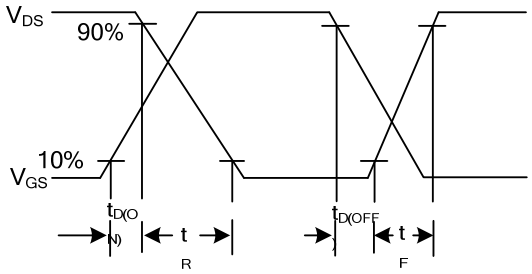

Switching Waveforms

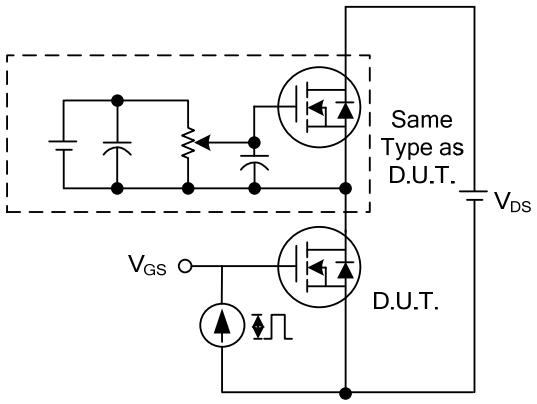

Gate Charge Test Circuit

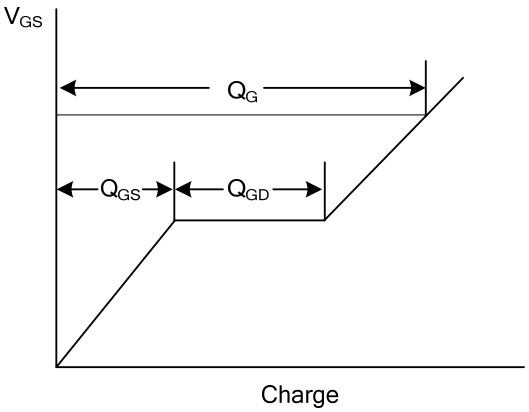

Gate Charge Waveform

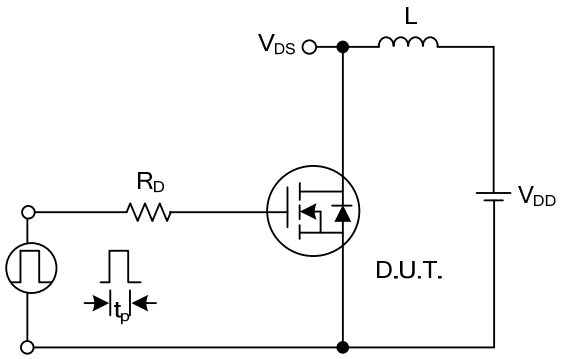

Unclamped Inductive Switching Test Circuit

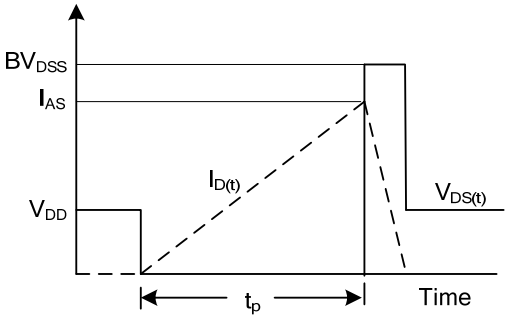

Unclamped Inductive Switching Waveforms

■ TYPICAL CHARACTERISTICS

Drain Current vs. Drain-Source Voltage

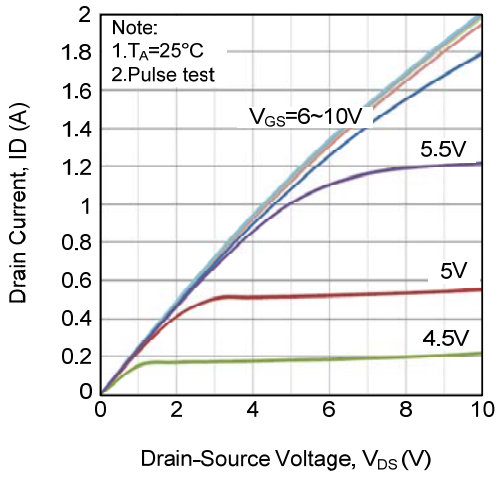

Drain-Source On-Resistance vs. Gate-Source Voltage

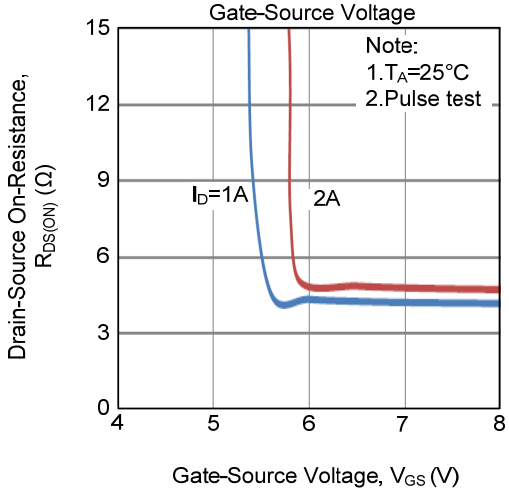

Gate Charge Characteristics

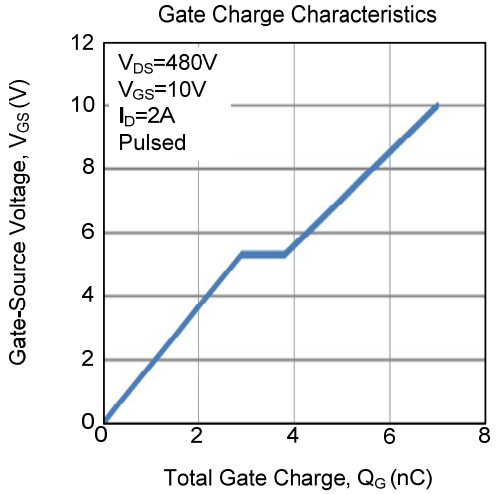

Capacitance Characteristics

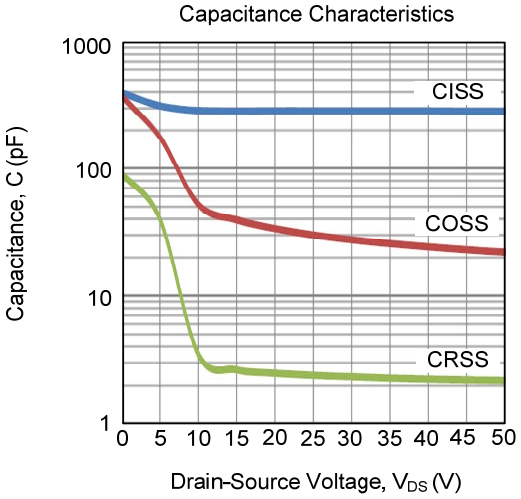

Drain-Source On-Resistance vs. Junction Temperature

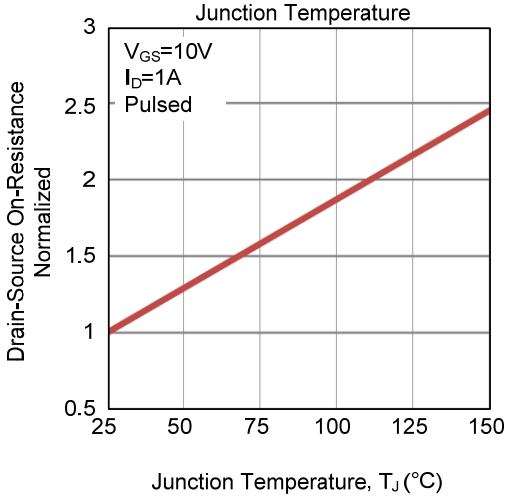

Breakdown Voltage vs. Junction Temperature

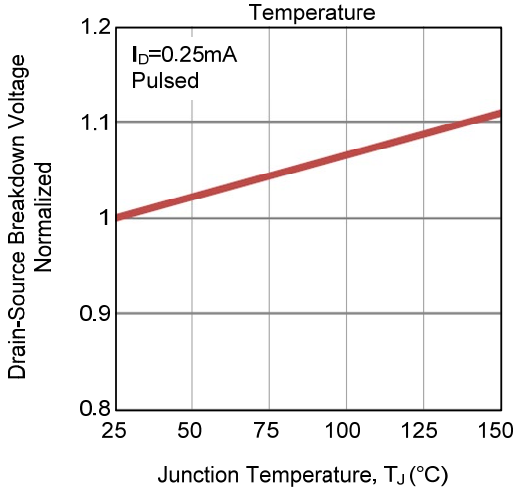

■ TYPICAL CHARACTERISTICS (Cont.)

Gate Threshold Voltage vs. Junction Temperature

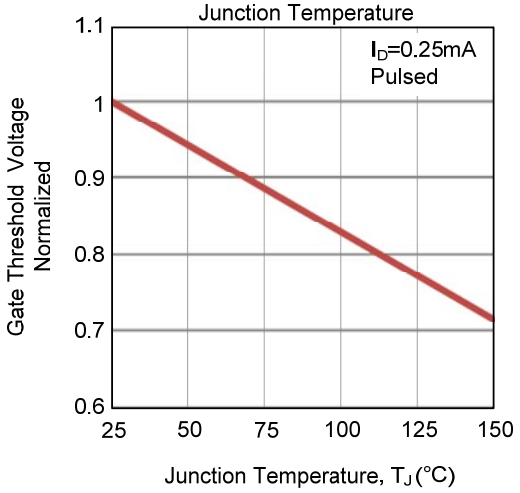

Source Current vs. Source-Drain Voltage

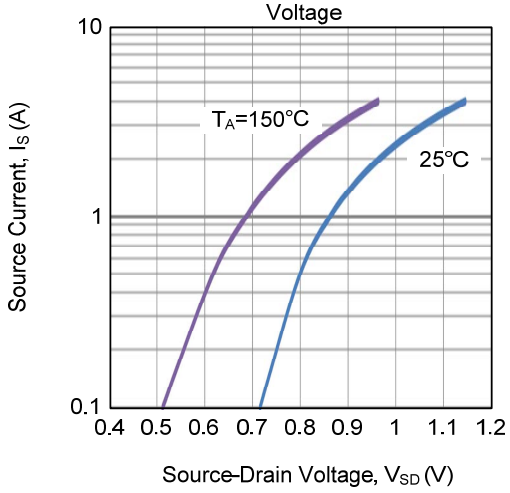

Drain Current vs. Gate-Source Voltage

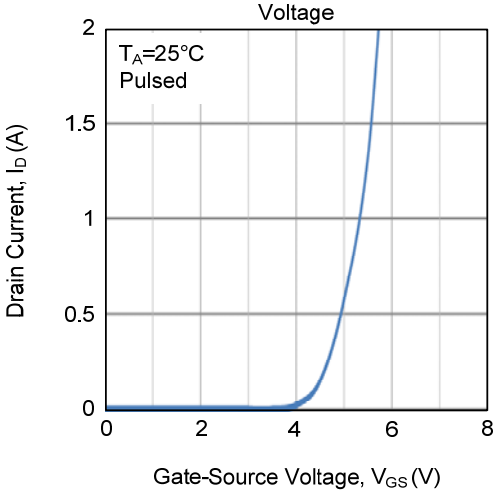

Drain-Source On-Resistance vs. Drain Current

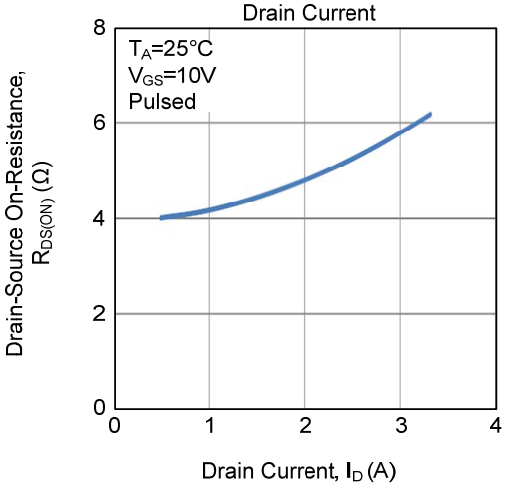

Power Dissipation vs. Junction Temperature

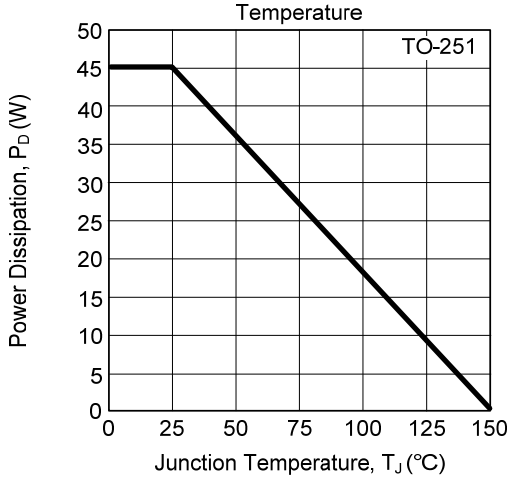

Drain Current vs. Junction Temperature

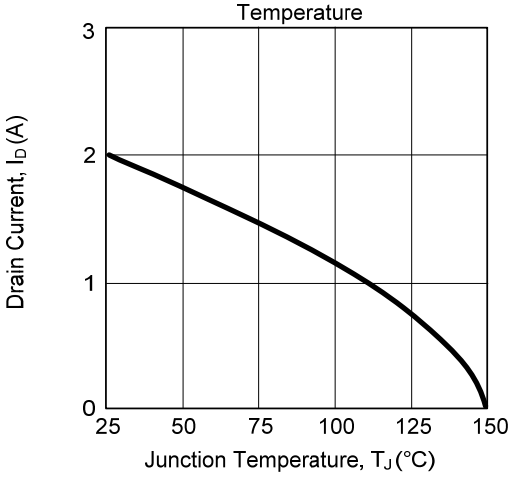

■ TYPICAL CHARACTERISTICS (Cont.)

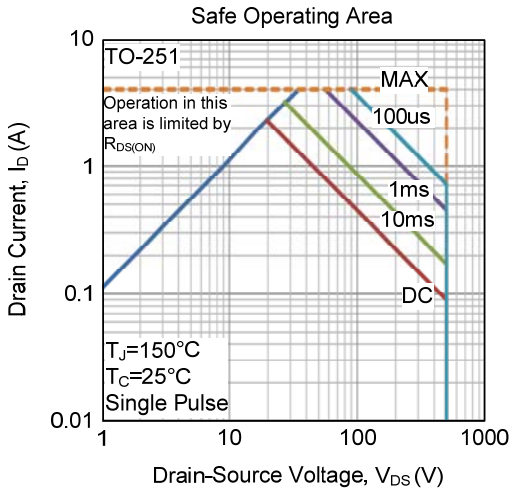

UTC assumes no responsibility for equipment failures that result from using products at values that exceed, even momentarily, rated values (such as maximum ratings, operating condition ranges, or other parameters) listed in products specifications of any and all UTC products described or contained herein. UTC products are not designed for use in life support appliances, devices or systems where malfunction of these products can be reasonably expected to result in personal injury. Reproduction in whole or in part is prohibited without the prior written consent of the copyright owner. UTC reserves the right to make changes to information published in this document, including without limitation specifications and product descriptions, at any time and without notice. This document supersedes and replaces all information supplied prior to the publication hereof.

ENTEGRECİ

Bu belge www.entegreci.com üzerinden sunulmaktadır.

Elektronik komponent tedarikinde Entegreci

Entegreci, Eskişehir merkezli, Türkiye geneline satış yapan bir elektronik komponent mağazasıdır. Entegreler (IC), mikrodenetleyiciler, transistörler, diyotlar, pasif elemanlar, konnektörler, modüller ve geliştirme kartları tek adetten seri üretim adetlerine kadar satılır. Ürün sayfalarında güncel stok durumunu, fiyatı ve datasheet bağlantısını bulabilirsiniz.

Parça koduyla arama

Üretici parça numarasını yazın; stok ve fiyatı hemen görün.

www.entegreci.com

Ürün kategorileri

Entegreden kapasitöre tüm elektronik komponent kategorileri.

Kategorilere göz atın

Üreticiler

Aradığınız üreticinin ürünlerini tek sayfada inceleyin.

Üreticileri görün

Toplu alım ve teklif

Listede olmayan ya da yüksek adetli parçalar için teklif isteyin.

Teklif isteyin

www.entegreci.com | **destek@entegreci.com** | **0850 305 90 34**

Entegreci is an online electronic components store based in Türkiye. Search by manufacturer part number to see stock, prices and datasheets for integrated circuits, microcontrollers, transistors, passive components and connectors, or request a quote for parts that are not listed.

Bu sayfa Entegreci tarafından eklenmiştir. Belgenin önceki sayfaları asıl yayıncısına aittir ve içeriği değiştirilmemiştir; en güncel sürüm için belgenin yayıncısına başvurun.