2MBI450VH-120-50

IGBT Modules

IGBT MODULE (V series)
1200V / 450A / 2 in one package

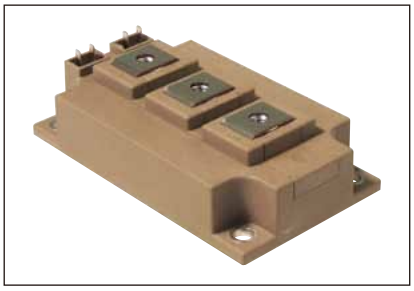

Features
High speed switching
Voltage drive
Low Inductance module structure

Applications
Inverter for Motor Drive
AC and DC Servo Drive Amplifier
Uninterruptible Power Supply
Industrial machines, such as Welding machines

Maximum Ratings and Characteristics

● **Absolute Maximum Ratings (at Tc=25°C unless otherwise specified)**

Items		Symbols	Conditions		Maximum ratings	Units
Collector-Emitter voltage		V_{CES}			1200	V
Gate-Emitter voltage		V_{GES}			±20	V
Collector current		Ic	Continuous	Tc=100°C	450	A
				Tc=25°C	520	
		Ic pulse	1ms		900	
		-Ic			450	
		-Ic pulse	1ms		900	
Collector power dissipation		Pc	1 device		2400	W
Junction temperature		Tj			175	°C
Operating junction temperature (under switching conditions)		T_{jop}			150	
Case temperature		T_C			125	
Storage temperature		Tstg			-40 ~ +125	
Isolation voltage	Between terminal and copper base (*1)	V_{iso}	AC : 1min.		4000	VAC
Screw torque	Mounting (*2)	-			6.0	N m
	Terminals (*3)				5.0	

Note *1: All terminals should be connected together during the test.
Note *2: Recommendable Value : 3.0-6.0 Nm (M5 or M6)
Note *3: Recommendable Value : 2.5-5.0 Nm (M6)

● **Electrical characteristics (at Tj= 25°C unless otherwise specified)**

Items	Symbols	Conditions		Characteristics min.	Characteristics typ.	Characteristics max.	Units
Zero gate voltage collector current	I_{CES}	V_{GE} = 0V, V_{CE} = 1200V		-	-	2.0	mA
Gate-Emitter leakage current	I_{GES}	V_{CE} = 0V, V_{GE} = ±20V		-	-	400	nA
Gate-Emitter threshold voltage	$V_{GE\ (th)}$	V_{CE} = 20V, I_C = 450mA		6.0	6.5	7.0	V
Collector-Emitter saturation voltage	$V_{CE\ (sat)}$ (terminal)	V_{GE} = 15V, I_C = 450A	Tj=25°C	-	2.10	2.45	V
			Tj=125°C	-	2.45	-	
			Tj=150°C	-	2.50	-	
	$V_{CE\ (sat)}$ (chip)		Tj=25°C	-	1.80	2.15	
			Tj=125°C	-	2.15	-	
			Tj=150°C	-	2.20	-	
Internal gate resistance	$R_{g(int)}$	-		-	1.9	-	Ω
Input capacitance	Cies	V_{CE} = 10V, V_{GE} = 0V, f = 1MHz		-	36.4	-	nF
Turn-on time	ton	V_{CC} = 600V L_S = 30nH, I_C = 450A, V_{GE} = ±15V, R_G = 1Ω, Tj = 150°C		-	0.60	-	μsec
	tr			-	0.20	-	
	tr (i)			-	0.05	-	
Turn-off time	toff			-	0.80	-	
	tf			-	0.08	-	
Forward on voltage	V_F (terminal)	V_{GE} = 0V, I_F = 450A	Tj=25°C	-	1.95	2.40	V
			Tj=125°C	-	2.15	-	
			Tj=150°C	-	2.10	-	
	V_F (chip)		Tj=25°C	-	1.70	2.15	
			Tj=125°C	-	1.90	-	
			Tj=150°C	-	1.85	-	
Reverse recovery time	trr	I_F = 450A		-	0.15	-	μsec

● **Thermal resistance characteristics**

Items	Symbols	Conditions	Characteristics min.	Characteristics typ.	Characteristics max.	Units
Thermal resistance (1device)	Rth(j-c)	Inverter IGBT	-	-	0.062	°C/W
		Inverter FWD	-	-	0.110	
Contact thermal resistance (1device) (*4)	Rth(c-f)	with Thermal Compound	-	0.0125	-	

Note *4: This is the value which is defined mounting on the additional cooling fin with thermal compound.

■ Characteristics (Representative)

Collector current vs. Collector-Emitter voltage (typ.)
Tj= 25°C / chip

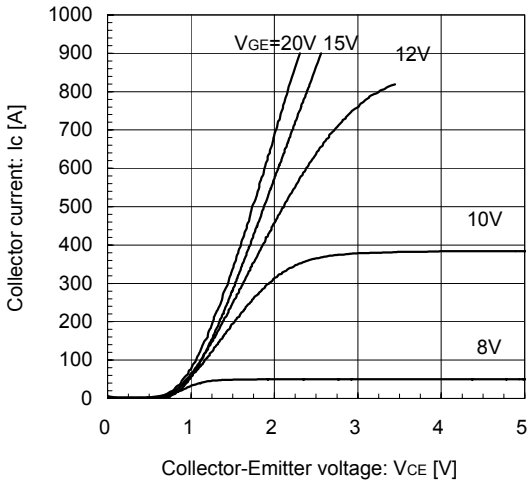

Collector current vs. Collector-Emitter voltage (typ.)
Tj= 150°C / chip

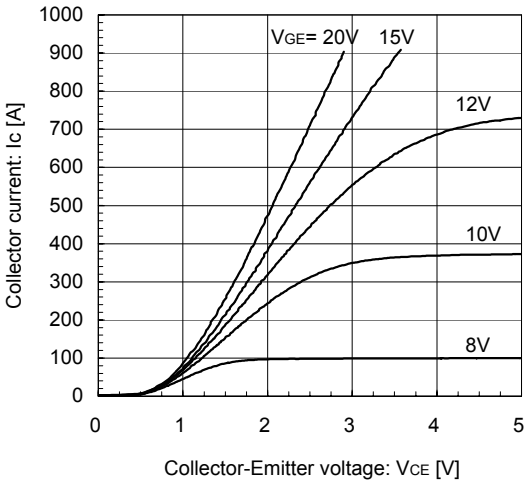

Collector current vs. Collector-Emitter voltage (typ.)
VGE= 15V / chip

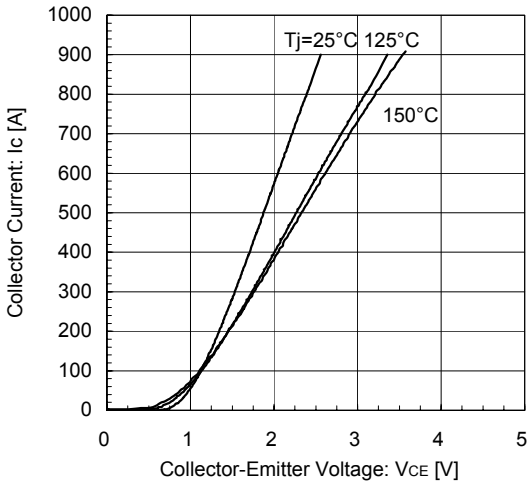

Collector-Emitter voltage vs. Gate-Emitter voltage (typ.)
Tj= 25°C / chip

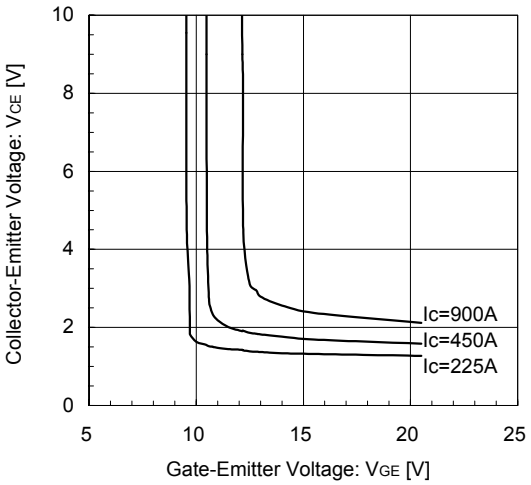

Gate Capacitance vs. Collector-Emitter Voltage (typ.)
VGE= 0V, *f*= 1MHz, Tj= 25°C

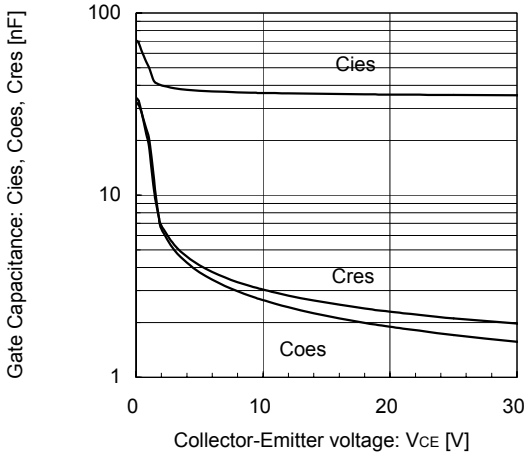

Dynamic Gate Charge (typ.)
Vcc=600V, Ic=450A, Tj= 25°C

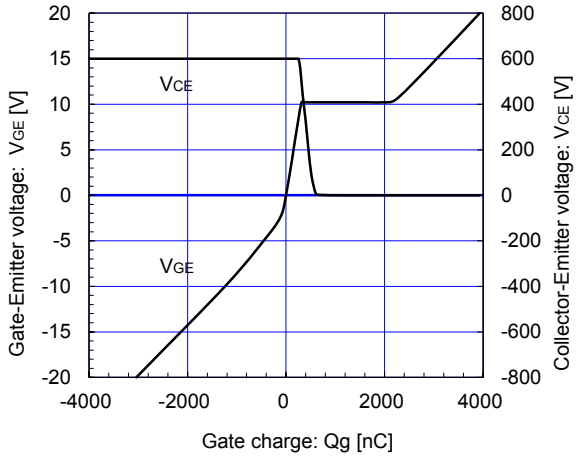

Switching time vs. Collector current (typ.)
Vcc=600V, V_{GE}=±15V, R_G=1Ω, Tj=125°C

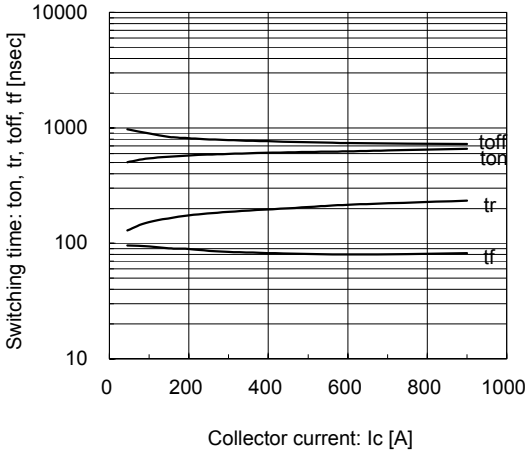

Switching time vs. Collector current (typ.)
Vcc=600V, V_{GE}=±15V, Rg=1Ω, Tj=150°C

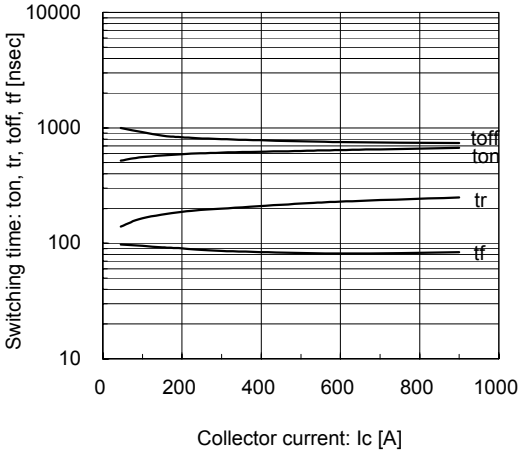

Switching time vs. Gate resistance (typ.)
Vcc=600V, Ic=450A, V_{GE}=±15V, Tj=125°C

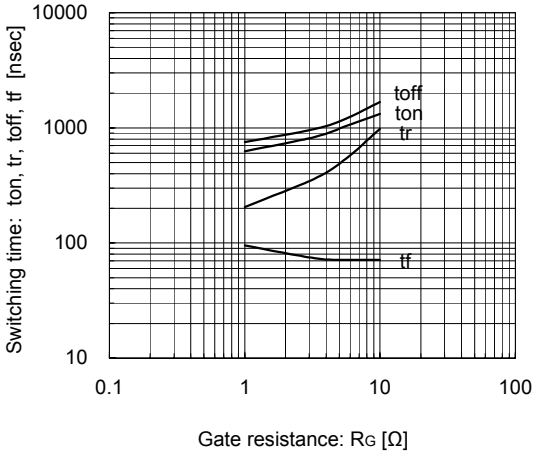

Switching loss vs. Collector current (typ.)
Vcc=600V, V_{GE}=±15V, R_G=1Ω, Tj=125°C, 150°C

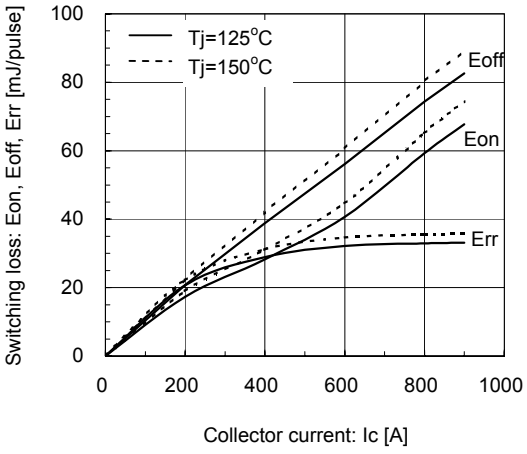

Switching loss vs. Gate resistance (typ.)
Vcc=600V, Ic=450A, V_{GE}=±15V, Tj=125°C, 150°C

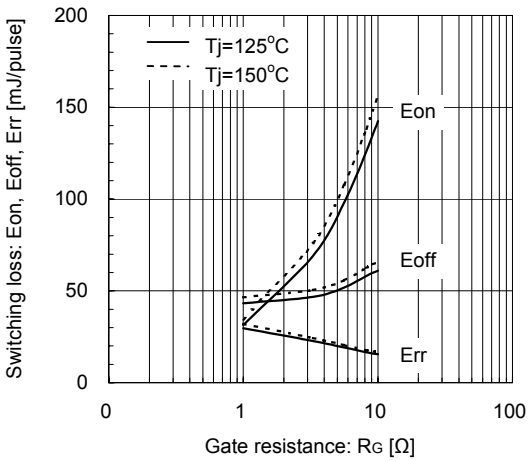

Reverse bias safe operating area (max.)
+V_{GE}=15V, -V_{GE}=15V, R_G=1Ω, Tj=150°C

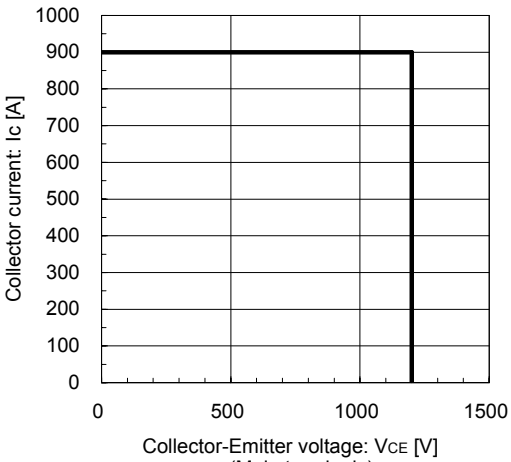

Forward Current vs. Forward Voltage (typ.)
chip

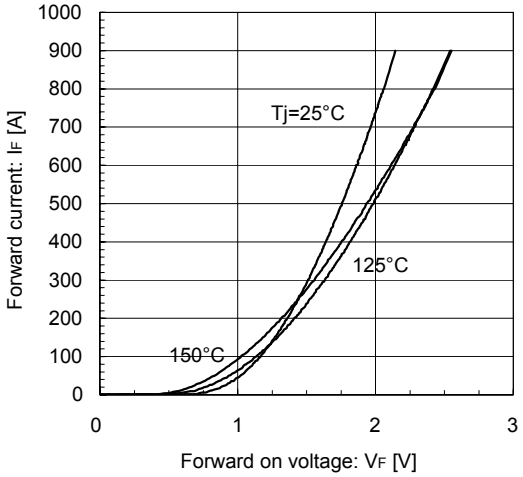

Reverse Recovery Characteristics (typ.)
Vcc=600V, VGE=±15V, RG=1Ω, Tj=125°C

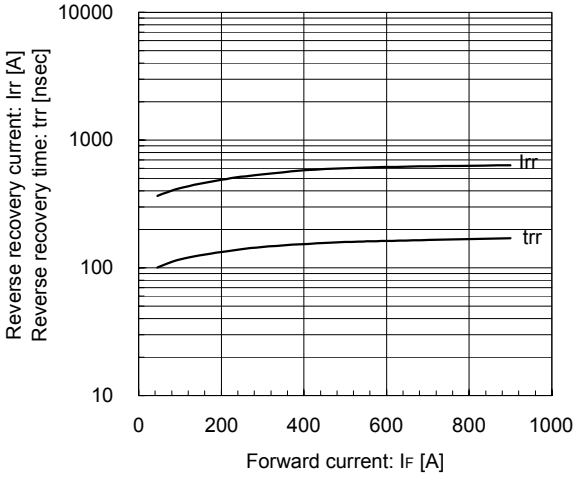

Reverse Recovery Characteristics (typ.)
Vcc=600V, VGE=±15V, RG=1Ω, Tj=150°C

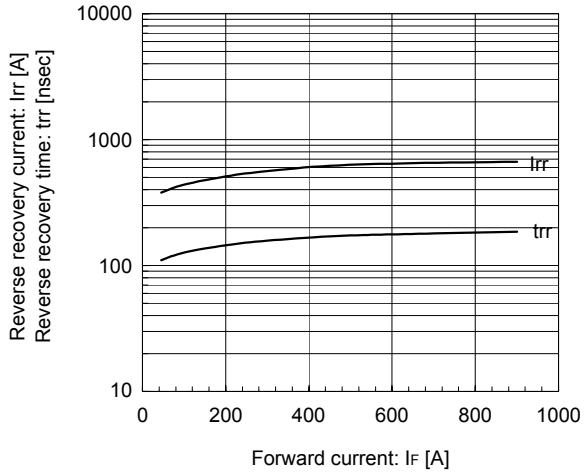

Transient Thermal Resistance (max.)

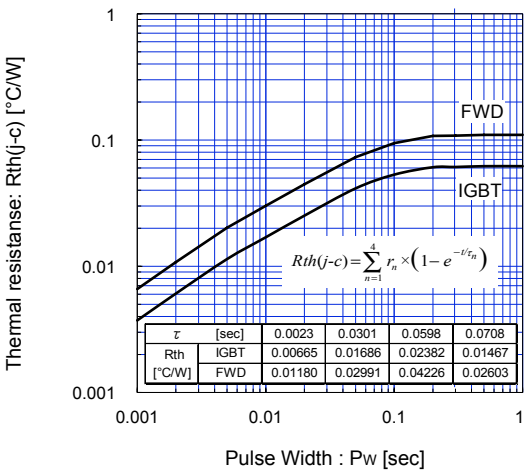

τ	[sec]	0.0023	0.0301	0.0598	0.0708
Rth [°C/W]	IGBT	0.00665	0.01686	0.02382	0.01467
	FWD	0.01180	0.02991	0.04226	0.02603

FWD safe operating area (max.)
Tj=150°C

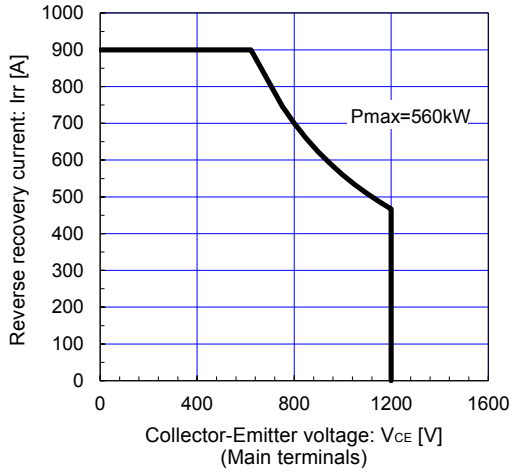

■ Outline Drawings (Unit: mm)

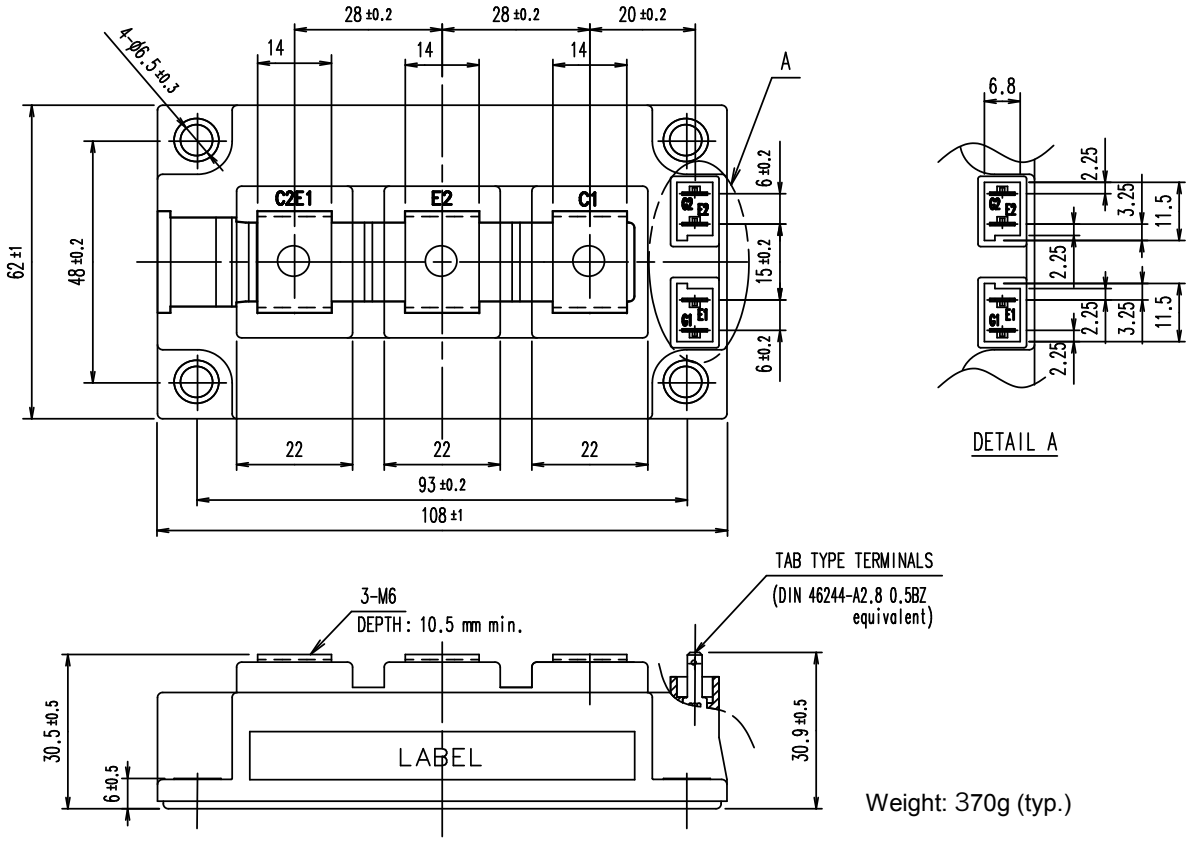

Weight: 370g (typ.)

■ Equivalent Circuit

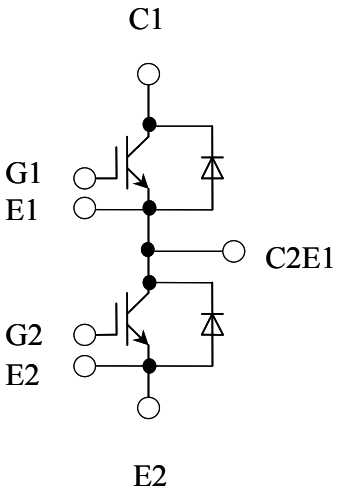

WARNING

1. This Catalog contains the product specifications, characteristics, data, materials, and structures as of March 2014.
The contents are subject to change without notice for specification changes or other reasons. When using a product listed in this Catalog, be sur to obtain the latest specifications.

2. All applications described in this Catalog exemplify the use of Fuji's products for your reference only. No right or license, either express or implied, under any patent, copyright, trade secret or other intellectual property right owned by Fuji Electric Co., Ltd. is (or shall be deemed) granted. Fuji Electric Co., Ltd. makes no representation or warranty, whether express or implied, relating to the infringement or alleged infringement of other's intellectual property rights which may arise from the use of the applications described herein.

3. Although Fuji Electric Co., Ltd. is enhancing product quality and reliability, a small percentage of semiconductor products may become faulty. When using Fuji Electric semiconductor products in your equipment, you are requested to take adequate safety measures to prevent the equipment from causing a physical injury, fire, or other problem if any of the products become faulty. It is recommended to make your design failsafe, flame retardant, and free of malfunction.

4. The products introduced in this Catalog are intended for use in the following electronic and electrical equipment which has normal reliability requirements.
- Computers
- OA equipment
- Communications equipment (terminal devices)
- Measurement equipment
- Machine tools
- Audiovisual equipment
- Electrical home appliances
- Personal equipment
- Industrial robots etc.

5. If you need to use a product in this Catalog for equipment requiring higher reliability than normal, such as for the equipment listed below, it is imperative to contact Fuji Electric Co., Ltd. to obtain prior approval. When using these products for such equipment, take adequate measures such as a backup system to prevent the equipment from malfunctioning even if a Fuji's product incorporated in the equipment becomes faulty.
- Transportation equipment (mounted on cars and ships)
- Trunk communications equipment
- Traffic-signal control equipment
- Gas leakage detectors with an auto-shut-off feature
- Emergency equipment for responding to disasters and anti-burglary devices
- Safety devices
- Medical equipment

6. Do not use products in this Catalog for the equipment requiring strict reliability such as the following and equivalents to strategic equipment (without limitation).
- Space equipment
- Aeronautic equipment
- Nuclear control equipment
- Submarine repeater equipment

7. Copyright ©1996-2014 by Fuji Electric Co., Ltd. All rights reserved.
No part of this Catalog may be reproduced in any form or by any means without the express permission of Fuji Electric Co., Ltd.

8. If you have any question about any portion in this Catalog, ask Fuji Electric Co., Ltd. or its sales agents before using the product.
Neither Fuji Electric Co., Ltd. nor its agents shall be liable for any injury caused by any use of the products not in accordance with instructions set forth herein.

富士電機 Innovating Energy Technology

Technical Information

IGBT Modules

- Please refer to URLs below for futher information about products, application manuals and design support.
- 关于本规格书中没有记载的产品信息，应用手册，技术信息等，请参考以下链接。
- 本データシートに記載されていない製品情報，アプリケーションマニュアル，デザインサポートは以下のURLをご参照下さい。

FUJI ELECTRIC Power Semiconductor WEB site

日本	www.fujielectric.co.jp/products/semiconductor/
Global	www.fujielectric.com/products/semiconductor/
中国	www.fujielectric.com.cn/products/semiconductor/
Europe	www.fujielectric-europe.com/en/power_semiconductor/
North America	www.americas.fujielectric.com/products/semiconductors/

Information

日本

1 半導体総合カタログ	www.fujielectric.co.jp/products/semiconductor/catalog/
2 製品情報	www.fujielectric.co.jp/products/semiconductor/model/
3 アプリケーションマニュアル	www.fujielectric.co.jp/products/semiconductor/model/igbt/application/
4 デザインサポート	www.fujielectric.co.jp/products/semiconductor/model/igbt/technical/
5 マウンティングインストラクション	www.fujielectric.co.jp/products/semiconductor/model/igbt/mounting/
6 IGBT 損失シミュレーションソフト	www.fujielectric.co.jp/products/semiconductor/model/igbt/simulation/
7 富士電機技報	www.fujielectric.co.jp/products/semiconductor/journal/
8 製品のお問い合わせ	www.fujielectric.co.jp/products/semiconductor/contact/
9 改廃のお知らせ	www.fujielectric.co.jp/products/semiconductor/discontinued/

Global

1 Semiconductors General Catalog	www.fujielectric.com/products/semiconductor/catalog/
2 Product Information	www.fujielectric.com/products/semiconductor/model/
3 Application Manuals	www.fujielectric.com/products/semiconductor/model/igbt/application/
4 Design Support	www.fujielectric.com/products/semiconductor/model/igbt/technical/
5 Mounting Instructions	www.fujielectric.com/products/semiconductor/model/igbt/mounting/
6 IGBT Loss Simulation Software	www.fujielectric.com/products/semiconductor/model/igbt/simulation/
7 Fuji Electric Journal	www.fujielectric.com/products/semiconductor/journal/
8 Contact	www.fujielectric.com/contact/
9 Revised and discontinued product information	www.fujielectric.com/products/semiconductor/discontinued/

中国

1 半导体综合目录	www.fujielectric.com.cn/products/semiconductor/catalog/
2 产品信息	www.fujielectric.com.cn/products/semiconductor/model/
3 应用手册	www.fujielectric.com.cn/products/semiconductor/model/igbt/application/
4 技术信息	www.fujielectric.com.cn/products/semiconductor/model/igbt/technical/
5 安装说明书	www.fujielectric.com.cn/products/semiconductor/model/igbt/mounting/
6 IGBT 损耗模拟软件	www.fujielectric.com.cn/products/semiconductor/model/igbt/simulation/
7 富士电机技报	www.fujielectric.com.cn/products/semiconductor/journal/
8 产品咨询	www.fujielectric.com/contact/
9 产品更改和停产信息	www.fujielectric.com.cn/products/semiconductor/discontinued/

ENTEGRECİ

Bu belge www.entegreci.com üzerinden sunulmaktadır.

Elektronik komponent tedarikinde Entegreci

Entegreci, Eskişehir merkezli, Türkiye geneline satış yapan bir elektronik komponent mağazasıdır. Entegreler (IC), mikrodenetleyiciler, transistörler, diyotlar, pasif elemanlar, konnektörler, modüller ve geliştirme kartları tek adetten seri üretim adetlerine kadar satılır. Ürün sayfalarında güncel stok durumunu, fiyatı ve datasheet bağlantısını bulabilirsiniz.

Parça koduyla arama

Üretici parça numarasını yazın; stok ve fiyatı hemen görün.

www.entegreci.com

Ürün kategorileri

Entegreden kapasitöre tüm elektronik komponent kategorileri.

Kategorilere göz atın

Üreticiler

Aradığınız üreticinin ürünlerini tek sayfada inceleyin.

Üreticileri görün

Toplu alım ve teklif

Listede olmayan ya da yüksek adetli parçalar için teklif isteyin.

Teklif isteyin

www.entegreci.com | **destek@entegreci.com** | **0850 305 90 34**

Entegreci is an online electronic components store based in Türkiye. Search by manufacturer part number to see stock, prices and datasheets for integrated circuits, microcontrollers, transistors, passive components and connectors, or request a quote for parts that are not listed.

Bu sayfa Entegreci tarafından eklenmiştir. Belgenin önceki sayfaları asıl yayıncısına aittir ve içeriği değiştirilmemiştir; en güncel sürüm için belgenin yayıncısına başvurun.