1.Description

78L XX is a low current regulated bipolar integrated circuit with a fixed output voltage.

2.Features

- Maximum output current 0.30A
- Output voltages include 5V, 6V, 7V, 7.5V, 8V, 9V, 12V, 15V, 18V, 24V, etc. Built-in
- overheat protection circuit
- Built-in Overload
- Limit Circuit, Built-in
- Output Short-Circuit Protection
- Package type: SOT-89, TO-92

3.Functional Block Diagram and Pin Functions

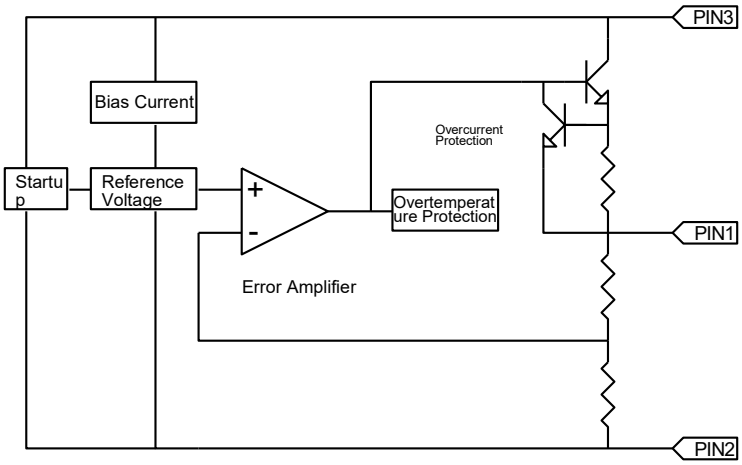

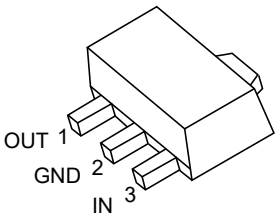

SOT89

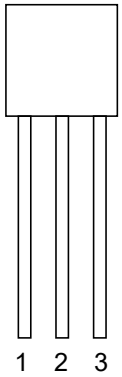

TO92

Pin description

Pin Number	Symbol	Function
1	OUTPUT	Output
2	GND	Ground
3	INPUT	Input

4.Absolute Maximum Ratings (If not otherwise specified, Tamb=25°C)

Characteristics	Symbol	Value	Units
Input Voltage (V_O=5V~18V)	V_I	35	V
Input Voltage (V_O=24V)		40	V
High power dissipation	P_D	800	mW
Operating Temperature	T_{OPR}	-20 to 120	°C
Storage Temperature	T_{STG}	-55 to 150	°C
Output Current	I_O	0.3	A

5.1 Electrical Characteristics (78L05)

(If otherwise specified, V_I=10V, I_O=10mA, C_I=0.33μF, C_O=0.1μF, Tamb=25°C)

Parameter	Symbol	Conditions	Min	Typ	Max	Units
Output Voltage	V_O	T_J=25°C	4.92	5	5.08	V
		7V≤V_I≤20V, I_O=5mA~200mA	4.8	5	5.2	V
Load Regulation	ΔV_O	T_J=25°C, I_O=5mA~200mA			50	mV
		T_J=25°C, I_O=5mA~300mA			100	mV
Line Regulation	ΔV_O	7V≤V_I≤25V, I_O=150mA			100	mV
Quiescent Current	I_{q1}	T_J=25°C		3.2	6	mA
Quiescent Current Change	ΔI_q	8V≤V_I≤25V, I_O=150mA			0.8	mA
		5mA≤I_O≤200mA			0.5	mA
Output Noise Voltage	V_N	10Hz≤f≤100kHz		40		μV
Output Voltage Temperature Drift	$\Delta V_O/\Delta T$	I_O=0mA		±0.2		mV/°C
Ripple Rejection Ratio	PSRR	8V≤V_I≤18V, f=120Hz I_O=100mA, T_J=25°C	62	68		dB
Peak Output Current	I_{max}	T_J=25°C		500		mA
Short-Circuit Current	I_{SC}	V_{IN}=35V		50		mA
Low Dropout Voltage	V_I-V_O	T_J=25°C, I_O=300mA		2		V

5.2 Electrical Characteristics (78L06)

(If otherwise specified, V_I=11V, I_O=10mA, C_I=0.33μF, C_O=0.1μF, Tamb=25°C)

Parameter	Symbol	Conditions	Min	Typ	Max	Units
Output Voltage	V_O	T_J=25°C	5.91	6	6.09	V
		8V≤V_I≤21V, I_O=5mA~200mA	5.76	6	6.24	V
Load Regulation	ΔV_O	T_J=25°C, I_O=5mA~200mA			60	mV
		T_J=25°C, I_O=5mA~300mA			120	mV
Line Regulation	ΔV_O	8V≤V_I≤25V, I_O=150mA			120	mV
Quiescent Current	I_{q1}	T_J=25°C		3.2	6	mA
Quiescent Current Change	ΔI_q	9V≤V_I≤25V, I_O=150mA			0.8	mA
		5mA≤I_O≤200mA			0.5	mA
Output Noise Voltage	V_N	10Hz≤f≤100kHz		45		μV
Output Voltage Temperature Drift	$\Delta V_O/\Delta T$	I_O=0mA		±0.2		mV/°C
Ripple Rejection Ratio	PSRR	9V≤V_I≤19.5V, f=120Hz I_O=100mA, T_J=25°C	59	80		dB
Peak Output Current	I_{max}	T_J=25°C		500		mA
Short-Circuit Current	I_{SC}	V_{IN}=35V		50		mA
Low Dropout Voltage	V_I-V_O	T_J=25°C, I_O=300mA		2		V

5.3 Electrical Characteristics (78L07)

(If otherwise specified, V_I=14V, I_O=10mA, C_I=0.33μF, C_O=0.1μF, Tamb=25°C)

Parameter	Symbol	Conditions	Min	Typ	Max	Units
Output Voltage	V_O	T_J=25°C	6.89	7	7.11	V
		10.5V≤V_I≤23V, I_O=5mA~200mA	6.72	7	7.28	V
Load Regulation	ΔV_O	T_J=25°C, I_O=5mA~200mA			80	mV
		T_J=25°C, I_O=5mA~300mA			160	mV
Line Regulation	ΔV_O	10.5V≤V_I≤25V, I_O=150mA			160	mV
Quiescent Current	I_{q1}	T_J=25°C		3.2	6	mA
Quiescent Current Change	ΔI_q	10.5V≤V_I≤25V, I_O=150mA			0.8	mA
		5mA≤I_O≤200mA			0.5	mA
Output Noise Voltage	V_N	10Hz≤f≤100kHz		52		μV
Output Voltage Temperature Drift	$\Delta V_O/\Delta T$	I_O=0mA		±0.2		mV/°C
Ripple Rejection Ratio	PSRR	11V≤V_I≤21V, f=120Hz I_O=100mA, T_J=25°C	59	80		dB
Peak Output Current	I_{max}	T_J=25°C		500		mA
Short-Circuit Current	I_{SC}	V_{IN}=35V		50		mA
Low Dropout Voltage	V_I-V_O	T_J=25°C, I_O=300mA		2		V

5.4 Electrical Characteristics (78L75)

(If otherwise specified, V_I=14V, I_O=10mA, C_I=0.33μF, C_O=0.1μF, Tamb=25°C)

Parameter	Symbol	Conditions	Min	Typ	Max	Units
Output Voltage	V_O	T_J=25°C	7.38	7.5	7.62	V
		10.5V≤V_I≤23V, I_O=5mA~200mA	7.19	7.5	7.81	V
Load Regulation	ΔV_O	T_J=25°C, I_O=5mA~200mA			80	mV
		T_J=25°C, I_O=5mA~300mA			160	mV
Line Regulation	ΔV_O	10.5V≤V_I≤25V, I_O=150mA			160	mV
Quiescent Current	I_{q1}	T_J=25°C		3.2	6	mA
Quiescent Current Change	ΔI_q	10.5V≤V_I≤25V, I_O=150mA			0.8	mA
		5mA≤I_O≤200mA			0.5	mA
Output Noise Voltage	V_N	10Hz≤f≤100kHz		52		μV
Output Voltage Temperature Drift	$\Delta V_O/\Delta T$	I_O=0mA		±0.2		mV/°C
Ripple Rejection Ratio	PSRR	11V≤V_I≤21V, f=120Hz I_O=100mA, T_J=25°C	59	80		dB
Peak Output Current	I_{max}	T_J=25°C		500		mA
Short-Circuit Current	I_{SC}	V_{IN}=35V		50		mA
Low Dropout Voltage	V_I-V_O	T_J=25°C, I_O=300mA		2		V

5.5 Electrical Characteristics (78L08)

(If otherwise specified, V_I=14V, I_O=10mA, C_I=0.33μF, C_O=0.1μF, Tamb=25°C)

Parameter	Symbol	Conditions	Min	Typ	Max	Units
Output Voltage	V_O	T_J=25°C	7.88	8	8.12	V
		10.5V≤V_I≤23V, I_O=5mA~200mA	7.68	8	8.32	V
Load Regulation	ΔV_O	T_J=25°C, I_O=5mA~200mA			80	mV
		T_J=25°C, I_O=5mA~300mA			160	mV
Line Regulation	ΔV_O	10.5V≤V_I≤25V, I_O=150mA			160	mV
Quiescent Current	I_{q1}	T_J=25°C		3.2	6	mA
Quiescent Current Change	ΔI_q	10.5V≤V_I≤25V, I_O=150mA			0.8	mA
		5mA≤I_O≤200mA			0.5	mA
Output Noise Voltage	V_N	10Hz≤f≤100kHz		52		μV
Output Voltage Temperature Drift	$\Delta V_O/\Delta T$	I_O=0mA		±0.2		mV/°C
Ripple Rejection Ratio	PSRR	11.5V≤V_I≤21.5V, f=120Hz I_O=100mA, T_J=25°C	56	80		dB
Peak Output Current	I_{max}	T_J=25°C		500		mA
Short-Circuit Current	I_{SC}	V_{IN}=35V		50		mA
Low Dropout Voltage	V_I-V_O	T_J=25°C, I_O=300mA		2		V

5.6 Electrical Characteristics (78L09)

(If otherwise specified, V_I=15V, I_O=10mA, C_I=0.33μF, C_O=0.1μF, Tamb=25°C)

Parameter	Symbol	Conditions	Min	Typ	Max	Units
Output Voltage	V_O	T_J=25°C	8.86	9	9.14	V
		11.5V≤V_I≤23V, I_O=5mA~200mA	8.63	9	9.37	V
Load Regulation	ΔV_O	T_J=25°C, I_O=5mA~200mA			90	mV
		T_J=25°C, I_O=5mA~300mA			180	mV
Line Regulation	ΔV_O	11.5V≤V_I≤25V, I_O=150mA			180	mV
Quiescent Current	I_{q1}	T_J=25°C		3.2	6	mA
Quiescent Current Change	ΔI_q	11.5V≤V_I≤25V, I_O=150mA			0.8	mA
		5mA≤I_O≤200mA			0.5	mA
Output Noise Voltage	V_N	10Hz≤f≤100kHz		52		μV
Output Voltage Temperature Drift	$\Delta V_O/\Delta T$	I_O=0mA		±0.2		mV/°C
Ripple Rejection Ratio	PSRR	12.5V≤V_I≤22.5V, f=120Hz I_O=100mA, T_J=25°C	56	80		dB
Peak Output Current	I_{max}	T_J=25°C		500		mA
Short-Circuit Current	I_{SC}	V_{IN}=35V		50		mA
Low Dropout Voltage	V_I-V_O	T_J=25°C, I_O=300mA		2		V

5.7 Electrical Characteristics (78L12)

(If otherwise specified, V_I=19V, I_O=10mA, C_I=0.33μF, C_O=0.1μF, Tamb=25°C)

Parameter	Symbol	Conditions	Min	Typ	Max	Units
Output Voltage	V_O	T_J=25°C	11.82	12	12.18	V
		14.5V≤V_I≤27V, I_O=5mA~200mA	11.5	12	12.5	V
Load Regulation	ΔV_O	T_J=25°C, I_O=5mA~200mA			120	mV
		T_J=25°C, I_O=5mA~300mA			240	mV
Line Regulation	ΔV_O	14.5V≤V_I≤30V, I_O=150mA		3.2	240	mV
Quiescent Current	I_{q1}	T_J=25°C			6	mA
Quiescent Current Change	ΔI_q	15V≤V_I≤30V, I_O=150mA			0.8	mA
		5mA≤I_O≤200mA		75	0.5	mA
Output Noise Voltage	V_N	10Hz≤f≤100kHz		±0.3		μV
Output Voltage Temperature Drift	$\Delta V_O/\Delta T$	I_O=0mA				mV/°C
Ripple Rejection Ratio	PSRR	15V≤V_I≤25V, f=120Hz I_O=100mA, T_J=25°C	55	80		dB
Peak Output Current	I_{max}	T_J=25°C		500		mA
Short-Circuit Current	I_{SC}	V_{IN}=35V		50		mA
Low Dropout Voltage	V_I-V_O	T_J=25°C, I_O=300mA		2		V

5.8 Electrical Characteristics (78L15)

(If otherwise specified, V_I=23V, I_O=10mA, C_I=0.33μF, C_O=0.1μF, Tamb=25°C)

Parameter	Symbol	Conditions	Min	Typ	Max	Units
Output Voltage	V_O	T_J=25°C	14.77	15	15.23	V
		17.5V≤V_I≤30V, I_O=5mA~200mA	14.4	15	15.6	V
Load Regulation	ΔV_O	T_J=25°C, I_O=5mA~200mA			150	mV
		T_J=25°C, I_O=5mA~300mA			300	mV
Line Regulation	ΔV_O	17.5V≤V_I≤30V, I_O=150mA		3.2	300	mV
Quiescent Current	I_{q1}	T_J=25°C			6	mA
Quiescent Current Change	ΔI_q	17.5V≤V_I≤30V, I_O=150mA			0.8	mA
		5mA≤I_O≤200mA		52	0.5	mA
Output Noise Voltage	V_N	10Hz≤f≤100kHz		±0.3		μV
Output Voltage Temperature Drift	$\Delta V_O/\Delta T$	I_O=0mA				mV/°C
Ripple Rejection Ratio	PSRR	18.5V≤V_I≤28.5V, f=120Hz I_O=100mA, T_J=25°C	56	80		dB
Peak Output Current	I_{max}	T_J=25°C		500		mA
Short-Circuit Current	I_{SC}	V_{IN}=35V		50		mA
Low Dropout Voltage	V_I-V_O	T_J=25°C, I_O=300mA		2		V

5.9 Electrical Characteristics (78L18)

(If otherwise specified, V_I=27V, I_O=10mA, C_I=0.33μF, C_O=0.1μF, Tamb=25°C)

Parameter	Symbol	Conditions	Min	Typ	Max	Units
Output Voltage	V_O	T_J=25°C	17.73	18	18.27	V
		21V≤V_I≤33V, I_O=5mA~200mA	17.28	18	18.72	V
Load Regulation	ΔV_O	T_J=25°C, I_O=5mA~200mA			180	mV
		T_J=25°C, I_O=5mA~300mA			360	mV
Line Regulation	ΔV_O	21V≤V_I≤33V, I_O=150mA		3.2	360	mV
Quiescent Current	I_{q1}	T_J=25°C			6.5	mA
Quiescent Current Change	ΔI_q	21V≤V_I≤33V, I_O=150mA			0.8	mA
		5mA≤I_O≤200mA		100	0.5	mA
Output Noise Voltage	V_N	10Hz≤f≤100kHz		±0.3		μV
Output Voltage Temperature Drift	$\Delta V_O/\Delta T$	I_O=0mA				mV/°C
Ripple Rejection Ratio	PSRR	22V≤V_I≤32V, f=120Hz I_O=100mA, T_J=25°C	53	70		dB
Peak Output Current	I_{max}	T_J=25°C		500		mA
Short-Circuit Current	I_{SC}	V_{IN}=35V		50		mA
Low Dropout Voltage	V_I-V_O	T_J=25°C, I_O=300mA		2		V

5.10 Electrical Characteristics (78L24)

(If otherwise specified, V_I=33V, I_O=10mA, C_I=0.33μF, C_O=0.1μF, Tamb=25°C)

Parameter	Symbol	Conditions	Min	Typ	Max	Units
Output Voltage	V_O	T_J=25°C	23.64	24	24.36	V
		27V≤V_I≤38V, I_O=5mA~200mA	23	24	25	V
Load Regulation	ΔV_O	T_J=25°C, I_O=5mA~200mA			240	mV
		T_J=25°C, I_O=5mA~300mA			480	mV
Line Regulation	ΔV_O	27V≤V_I≤38V, I_O=150mA		3.2	480	mV
Quiescent Current	I_{q1}	T_J=25°C			7	mA
Quiescent Current Change	ΔI_q	27V≤V_I≤38V, I_O=150mA			0.8	mA
		5mA≤I_O≤200mA		170	0.5	mA
Output Noise Voltage	V_N	10Hz≤f≤100kHz		±0.5		μV
Output Voltage Temperature Drift	$\Delta V_O/\Delta T$	I_O=0mA				mV/°C
Ripple Rejection Ratio	PSRR	28V≤V_I≤38V, f=120Hz I_O=200mA, T_J=25°C	50	70		dB
Peak Output Current	I_{max}	T_J=25°C		500		mA
Short-Circuit Current	I_{SC}	V_{IN}=35V		50		mA
Low Dropout Voltage	V_I-V_O	T_J=25°C, I_O=300mA		2		V

6.Application Circuit

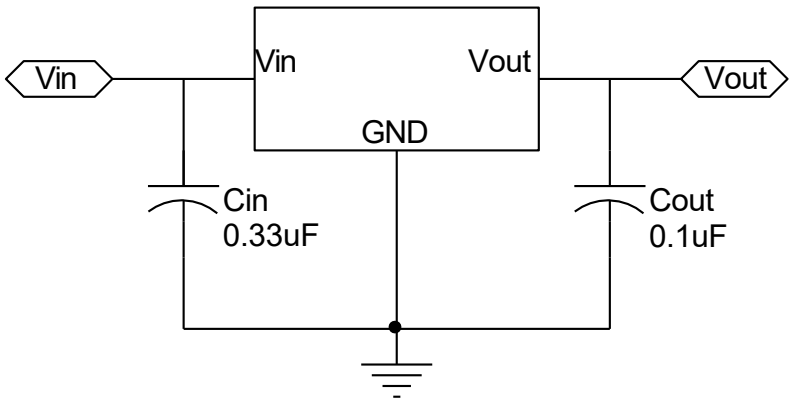

7.1 TO-92 Package Outline Dimensions

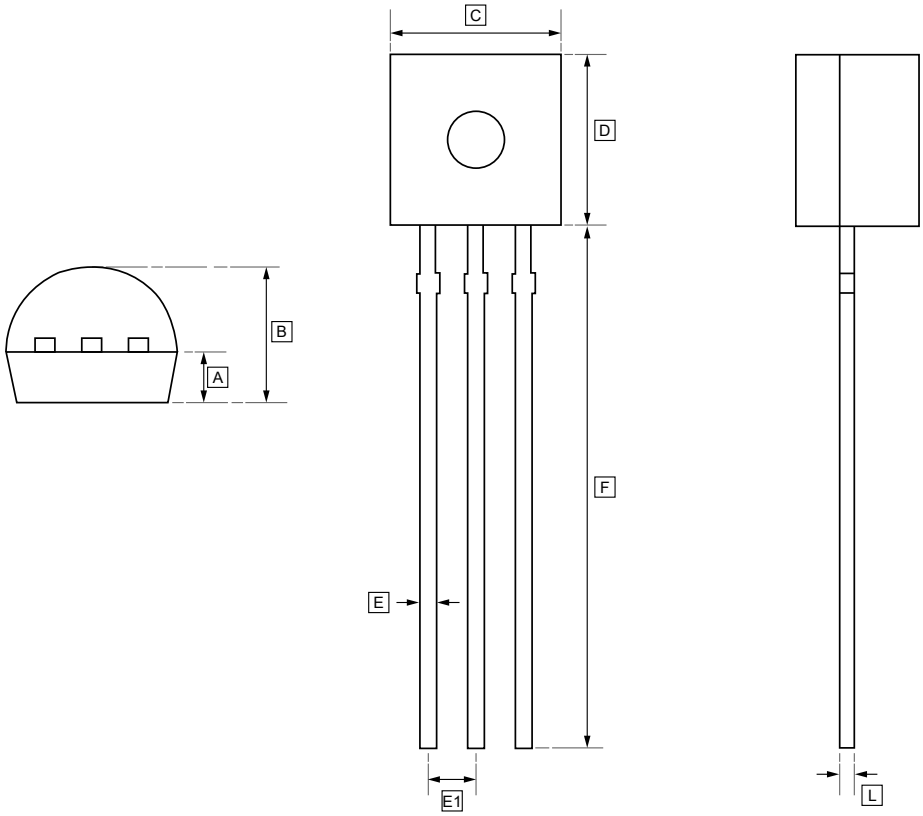

DIMENSIONS (mm are the original dimensions)

Symbol	A	B	C	D	E	E1	F	L
Min	1.10	3.50	4.50	4.40	0.35	1.27	13.50	0.35
Max	1.30	3.90	4.90	4.90	0.45	TYP	14.50	0.40

7.2 SOT-89 Package Outline Dimensions

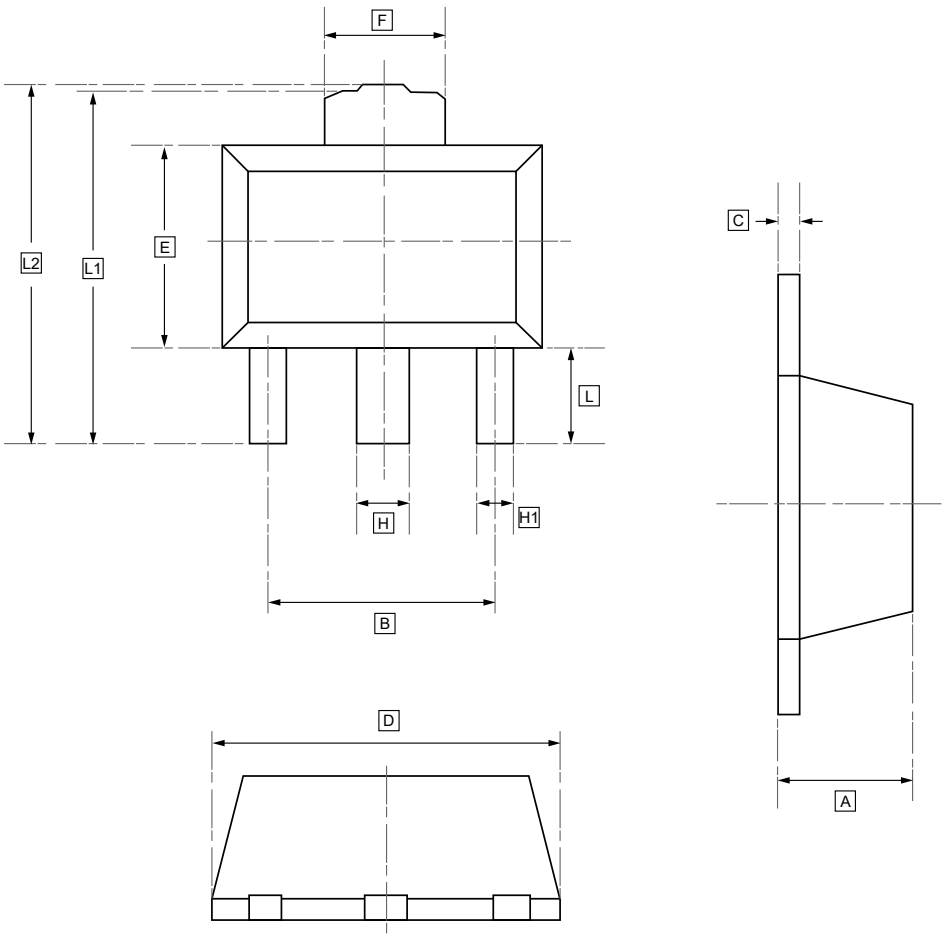

DIMENSIONS (mm are the original dimensions)

Symbol	A	B	C	D	E	F	H	H1	L	L1	L2
Min	1.450	2.950	0.330	4.450	2.450	1.650	0.450	0.370	0.900	4.100	4.100
Max	1.550	3.050	0.430	4.550	2.550	1.750	0.580	0.480	1.000	4.300	4.350

8.Ordering Information

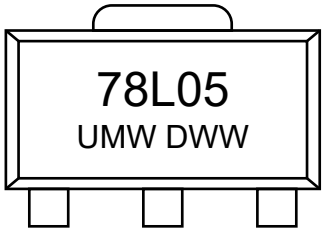

DWW: Batch Code

Order Code	Marking	Package	Base QTY	Delivery Mode
UMW 78L05-300	78L05	SOT-89	1000	Tape and reel
UMW 78L06-300	78L06	SOT-89	1000	Tape and reel
UMW 78L08-300	78L08	SOT-89	1000	Tape and reel

9.Disclaimer

UMW reserves the right to make changes to all products, specifications. Customers should obtain the latest version of product documentation and verify the completeness and currency of the information before placing an order.

When applying our products, please do not exceed the maximum rated values, as this may affect the reliability of the entire system. Under certain conditions, any semiconductor product may experience faults or failures. Buyers are responsible for adhering to safety standards and implementing safety measures during system design, prototyping, and manufacturing when using our products to prevent potential failure risks that could lead to personal injury or property damage.

Unless explicitly stated in writing, UMW products are not intended for use in medical, life-saving, or life-sustaining applications, nor for any other applications where product failure could result in personal injury or death. If customers use or sell the product for such applications without explicit authorization, they assume all associated risks.

When reselling, applying, or exporting, please comply with export control laws and regulations of China, the United States, the United Kingdom, the European Union, and other relevant countries, regions, and international organizations.

This document and any actions by UMW do not grant any intellectual property rights, whether express or implied, by estoppel or otherwise. The product names and marks mentioned herein may be trademarks of their respective owners.

ENTEGRECİ

Bu belge www.entegreci.com üzerinden sunulmaktadır.

Elektronik komponent tedarikinde Entegreci

Entegreci, Eskişehir merkezli, Türkiye geneline satış yapan bir elektronik komponent mağazasıdır. Entegreler (IC), mikrodenetleyiciler, transistörler, diyotlar, pasif elemanlar, konnektörler, modüller ve geliştirme kartları tek adetten seri üretim adetlerine kadar satılır. Ürün sayfalarında güncel stok durumunu, fiyatı ve datasheet bağlantısını bulabilirsiniz.

Parça koduyla arama

Üretici parça numarasını yazın; stok ve fiyatı hemen görün.

www.entegreci.com

Ürün kategorileri

Entegreden kapasitöre tüm elektronik komponent kategorileri.

Kategorilere göz atın

Üreticiler

Aradığınız üreticinin ürünlerini tek sayfada inceleyin.

Üreticileri görün

Toplu alım ve teklif

Listede olmayan ya da yüksek adetli parçalar için teklif isteyin.

Teklif isteyin

www.entegreci.com | **destek@entegreci.com** | **0850 305 90 34**

Entegreci is an online electronic components store based in Türkiye. Search by manufacturer part number to see stock, prices and datasheets for integrated circuits, microcontrollers, transistors, passive components and connectors, or request a quote for parts that are not listed.

Bu sayfa Entegreci tarafından eklenmiştir. Belgenin önceki sayfaları asıl yayıncısına aittir ve içeriği değiştirilmemiştir; en güncel sürüm için belgenin yayıncısına başvurun.