MCP1700

Low Quiescent Current LDO

Features

- 1.6 µA Typical Quiescent Current
- Input Operating Voltage Range: 2.3V to 6.0V
- Output Voltage Range: 1.2V to 5.0V
- 250 mA Output Current for output voltages ≥ 2.5V
- 200 mA Output Current for output voltages < 2.5V
- Low Dropout (LDO) voltage
  - 178 mV typical @ 250 mA for V_{OUT} = 2.8V
- 0.4% Typical Output Voltage Tolerance
- Standard Output Voltage Options:
  - 1.2V, 1.8V, 2.5V, 3.0V, 3.3V, 5.0V
- Stable with 1.0 µF Ceramic Output capacitor
- Short Circuit Protection
- Overtemperature Protection

Applications

- Battery-powered Devices
- Battery-powered Alarm Circuits
- Smoke Detectors
- CO^2 Detectors
- Pagers and Cellular Phones
- Smart Battery Packs
- Low Quiescent Current Voltage Reference
- PDAs
- Digital Cameras
- Microcontroller Power

Related Literature

- AN765, “Using Microchip’s Micropower LDOs”, DS00765, Microchip Technology Inc., 2002
- AN766, “Pin-Compatible CMOS Upgrades to BiPolar LDOs”, DS00766, Microchip Technology Inc., 2002
- AN792, “A Method to Determine How Much Power a SOT23 Can Dissipate in an Application”, DS00792, Microchip Technology Inc., 2001

General Description

The MCP1700 is a family of CMOS low dropout (LDO) voltage regulators that can deliver up to 250 mA of current while consuming only 1.6 µA of quiescent current (typical). The input operating range is specified from 2.3V to 6.0V, making it an ideal choice for two and three primary cell battery-powered applications, as well as single cell Li-Ion-powered applications.

The MCP1700 is capable of delivering 250 mA with only 178 mV of input to output voltage differential (V_{OUT} = 2.8V). The output voltage tolerance of the MCP1700 is typically ±0.4% at +25°C and ±3% maximum over the operating junction temperature range of -40°C to +125°C.

Output voltages available for the MCP1700 range from 1.2V to 5.0V. The LDO output is stable when using only 1 µF output capacitance. Ceramic, tantalum or aluminum electrolytic capacitors can all be used for input and output. Overcurrent limit and overtemperature shutdown provide a robust solution for any application.

Package options include the SOT-23, SOT-89 and TO-92.

Package Types

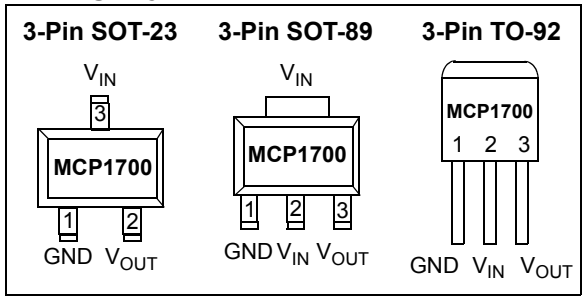

© 2007 Microchip Technology Inc.

Functional Block Diagrams

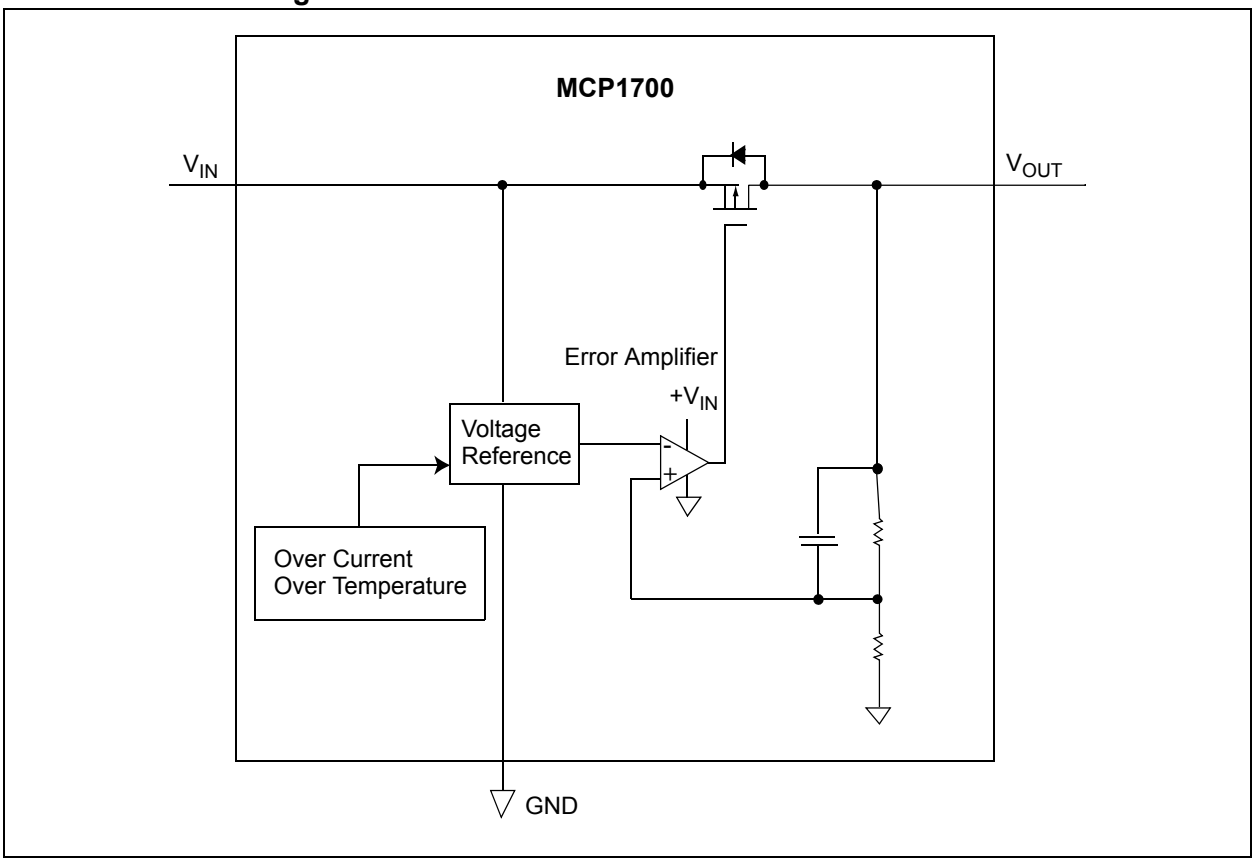

Typical Application Circuits

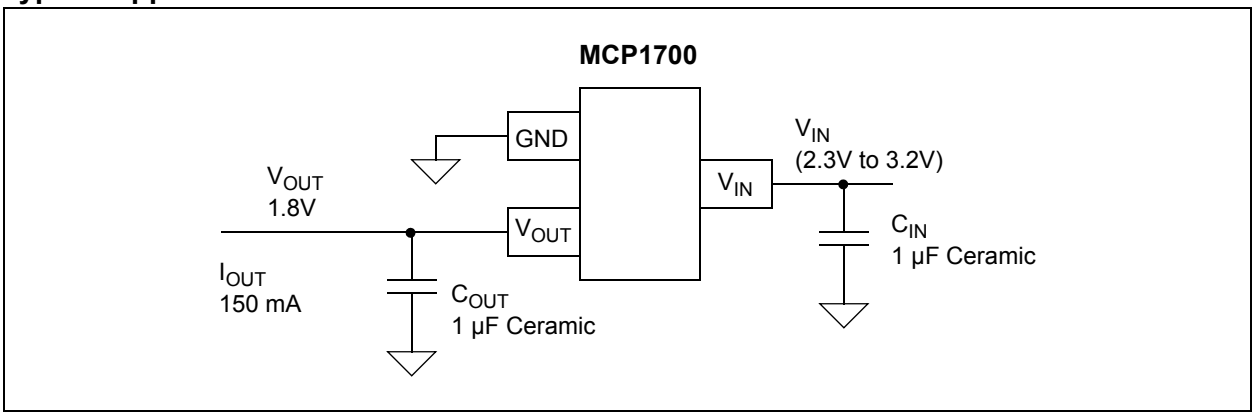

© 2007 Microchip Technology Inc.

1.0 ELECTRICAL CHARACTERISTICS

Absolute Maximum Ratings †

V_{DD}.....+6.5V
All inputs and outputs w.r.t. .....(V_{SS}-0.3V) to (V_{IN}+0.3V)
Peak Output Current .....Internally Limited
Storage temperature .....-65°C to +150°C
Maximum Junction Temperature..... 150°C
Operating Junction Temperature.....-40°C to +125°C
ESD protection on all pins (HBM;MM)..... ≥ 4 kV; ≥ 400V

† Notice: Stresses above those listed under "Maximum Ratings" may cause permanent damage to the device. This is a stress rating only and functional operation of the device at those or any other conditions above those indicated in the operational listings of this specification is not implied. Exposure to maximum rating conditions for extended periods may affect device reliability.

DC CHARACTERISTICS

Electrical Characteristics: Unless otherwise specified, all limits are established for V_{IN} = V_R + 1, I_{LOAD} = 100 µA, C_{OUT} = 1 µF (X7R), C_{IN} = 1 µF (X7R), T_A = +25°C.
Boldface type applies for junction temperatures, T_J **(Note 6)** of -40°C to +125°C.

Parameters	Sym	Min	Typ	Max	Units	Conditions
Input / Output Characteristics						
Input Operating Voltage	V_{IN}	**2.3**	—	**6.0**	V	**Note 1**
Input Quiescent Current	I_q	—	1.6	**4**	µA	I_L = 0 mA, V_{IN} = V_R +1V
Maximum Output Current	I_{OUT_mA}	**250** **200**	— —	— —	mA	For $V_R \geq$ 2.5V For $V_R <$ 2.5V
Output Short Circuit Current	I_{OUT_SC}	—	408	—	mA	V_{IN} = V_R + V, V_{OUT} = GND, Current (peak current) measured 10 ms after short is applied.
Output Voltage Regulation	V_{OUT}	**V_R-3.0%** V_R-2.0%	V_R±0.4 %	**V_R+3.0%** V_R+2.0%	V	**Note 2**
V_{OUT} Temperature Coefficient	TCV_{OUT}	—	50	—	ppm/°C	**Note 3**
Line Regulation	ΔV_{OUT}/ (V_{OUT}XΔV_{IN})	**-1.0**	±0.75	**+1.0**	%/V	(V_R+1)V $\leq V_{IN} \leq$ 6V
Load Regulation	$\Delta V_{OUT}/V_{OUT}$	**-1.5**	±1.0	**+1.5**	%	I_L = 0.1 mA to 250 mA for $V_R \geq$ 2.5V I_L = 0.1 mA to 200 mA for $V_R <$ 2.5V **Note 4**
Dropout Voltage $V_R >$ 2.5V	V_{IN}-V_{OUT}	—	178	**350**	mV	I_L = 250 mA, **(Note 1, Note 5)**
Dropout Voltage $V_R <$ 2.5V	V_{IN}-V_{OUT}	—	150	**350**	mV	I_L = 200 mA, **(Note 1, Note 5)**
Output Rise Time	T_R	—	500	—	µs	10% V_R to 90% V_R V_{IN} = 0V to 6V, R_L = 50Ω resistive
Output Noise	e_N	—	3	—	µV/(Hz)$^{1/2}$	I_L = 100 mA, f = 1 kHz, C_{OUT} = 1 µF

Note 1: The minimum V_{IN} must meet two conditions: $V_{IN} \geq$ 2.3V and $V_{IN} \geq (V_R + 3.0\%) + V_{DROPOUT}$.

2: V_R is the nominal regulator output voltage. For example: V_R = 1.2V, 1.5V, 1.8V, 2.5V, 2.8V, 3.0V, 3.3V, 4.0V, 5.0V. The input voltage (V_{IN} = V_R + 1.0V); I_{OUT} = 100 µA.

3: $TCV_{OUT} = (V_{OUT-HIGH} - V_{OUT-LOW}) * 10^6 / (V_R * \Delta Temperature)$, $V_{OUT-HIGH}$ = highest voltage measured over the temperature range. $V_{OUT-LOW}$ = lowest voltage measured over the temperature range.

4: Load regulation is measured at a constant junction temperature using low duty cycle pulse testing. Changes in output voltage due to heating effects are determined using thermal regulation specification TCV_{OUT}.

5: Dropout voltage is defined as the input to output differential at which the output voltage drops 2% below its measured value with a V_R + 1V differential applied.

6: The maximum allowable power dissipation is a function of ambient temperature, the maximum allowable junction temperature and the thermal resistance from junction to air (i.e., T_A, T_J, θ_{JA}). Exceeding the maximum allowable power dissipation will cause the device operating junction temperature to exceed the maximum 150°C rating. Sustained junction temperatures above 150°C can impact the device reliability.

7: The junction temperature is approximated by soaking the device under test at an ambient temperature equal to the desired Junction temperature. The test time is small enough such that the rise in the Junction temperature over the ambient temperature is not significant.

© 2007 Microchip Technology Inc.

DC CHARACTERISTICS (CONTINUED)

Electrical Characteristics: Unless otherwise specified, all limits are established for $V_{IN} = V_R + 1$, $I_{LOAD} = 100\ \mu A$, $C_{OUT} = 1\ \mu F$ (X7R), $C_{IN} = 1\ \mu F$ (X7R), $T_A = +25°C$.
Boldface type applies for junction temperatures, T_J **(Note 6)** of -40°C to +125°C.

Parameters	Sym	Min	Typ	Max	Units	Conditions
Power Supply Ripple Rejection Ratio	PSRR	—	44	—	dB	f = 100 Hz, $C_{OUT} = 1\ \mu F$, $I_L = 50$ mA, $V_{INAC} = 100$ mV pk-pk, $C_{IN} = 0\ \mu F$, $V_R = 1.2V$
Thermal Shutdown Protection	T_{SD}	—	140	—	°C	$V_{IN} = V_R + 1$, $I_L = 100\ \mu A$

Note 1: The minimum V_{IN} must meet two conditions: $V_{IN} \geq 2.3V$ and $V_{IN} \geq (V_R + 3.0\%) + V_{DROPOUT}$.

2: V_R is the nominal regulator output voltage. For example: $V_R = 1.2V$, 1.5V, 1.8V, 2.5V, 2.8V, 3.0V, 3.3V, 4.0V, 5.0V. The input voltage ($V_{IN} = V_R + 1.0V$); $I_{OUT} = 100\ \mu A$.

3: $TCV_{OUT} = (V_{OUT\text{-}HIGH} - V_{OUT\text{-}LOW}) * 10^6 / (V_R * \Delta Temperature)$, $V_{OUT\text{-}HIGH}$ = highest voltage measured over the temperature range. $V_{OUT\text{-}LOW}$ = lowest voltage measured over the temperature range.

4: Load regulation is measured at a constant junction temperature using low duty cycle pulse testing. Changes in output voltage due to heating effects are determined using thermal regulation specification TCV_{OUT}.

5: Dropout voltage is defined as the input to output differential at which the output voltage drops 2% below its measured value with a $V_R + 1V$ differential applied.

6: The maximum allowable power dissipation is a function of ambient temperature, the maximum allowable junction temperature and the thermal resistance from junction to air (i.e., T_A, T_J, θ_{JA}). Exceeding the maximum allowable power dissipation will cause the device operating junction temperature to exceed the maximum 150°C rating. Sustained junction temperatures above 150°C can impact the device reliability.

7: The junction temperature is approximated by soaking the device under test at an ambient temperature equal to the desired Junction temperature. The test time is small enough such that the rise in the Junction temperature over the ambient temperature is not significant.

TEMPERATURE SPECIFICATIONS

Electrical Characteristics: Unless otherwise specified, all limits are established for $V_{IN} = V_R + 1$, $I_{LOAD} = 100\ \mu A$, $C_{OUT} = 1\ \mu F$ (X7R), $C_{IN} = 1\ \mu F$ (X7R), $T_A = +25°C$.
Boldface type applies for junction temperatures, T_J **(Note 1)** of -40°C to +125°C.

Parameters	Sym	Min	Typ	Max	Units	Conditions
Temperature Ranges						
Specified Temperature Range	T_A	-40		+125	°C	
Operating Temperature Range	T_A	-40		+125	°C	
Storage Temperature Range	T_A	-65		+150	°C	
Thermal Package Resistance						
Thermal Resistance, SOT-23	θ_{JA}	—	336	—	°C/W	Minimum Trace Width Single Layer Board
		—	230	—	°C/W	Typical FR4 4-layer Application
Thermal Resistance, SOT-89	θ_{JA}	—	52	—	°C/W	Typical, 1 square inch of copper
Thermal Resistance, TO-92	θ_{JA}	—	131.9	—	°C/W	EIA/JEDEC JESD51-751-7 4-Layer Board

Note 1: The maximum allowable power dissipation is a function of ambient temperature, the maximum allowable junction temperature and the thermal resistance from junction to air (i.e., T_A, T_J, θ_{JA}). Exceeding the maximum allowable power dissipation will cause the device operating junction temperature to exceed the maximum 150°C rating. Sustained junction temperatures above 150°C can impact the device reliability.

© 2007 Microchip Technology Inc.

2.0 TYPICAL PERFORMANCE CURVES

Note:	The graphs and tables provided following this note are a statistical summary based on a limited number of samples and are provided for informational purposes only. The performance characteristics listed herein are not tested or guaranteed. In some graphs or tables, the data presented may be outside the specified operating range (e.g., outside specified power supply range) and therefore outside the warranted range.

Note: Unless otherwise indicated: V_R = 1.8V, C_{OUT} = 1 µF Ceramic (X7R), C_{IN} = 1 µF Ceramic (X7R), I_L = 100 µA, T_A = +25°C, V_{IN} = V_R + V.

Note: Junction Temperature (T_J) is approximated by soaking the device under test to an ambient temperature equal to the desired junction temperature. The test time is small enough such that the rise in Junction temperature over the Ambient temperature is not significant.

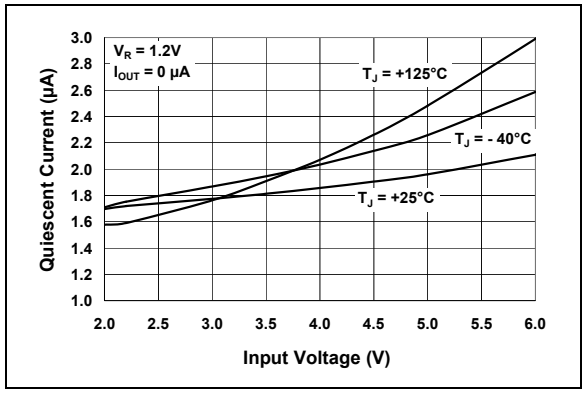

FIGURE 2-1: *Input Quiescent Current vs. Input Voltage.*

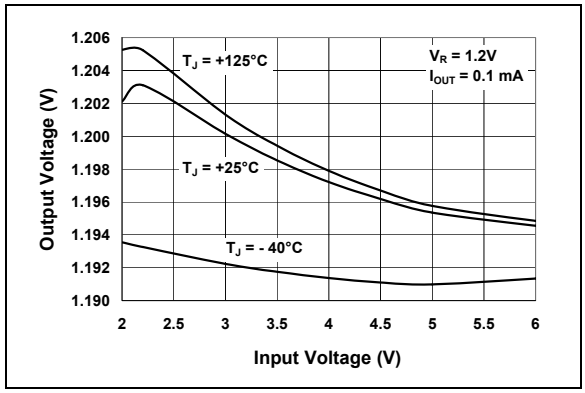

FIGURE 2-4: *Output Voltage vs. Input Voltage (V_R = 1.2V).*

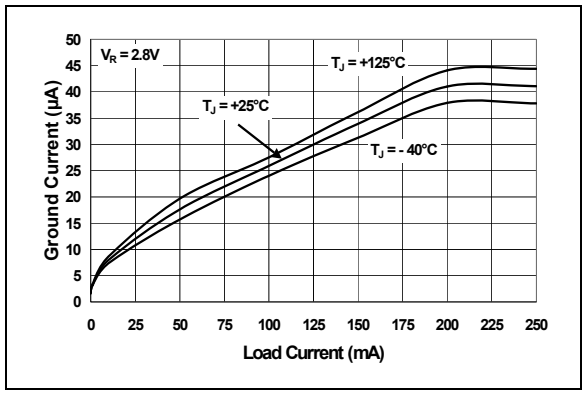

FIGURE 2-2: *Ground Current vs. Load Current.*

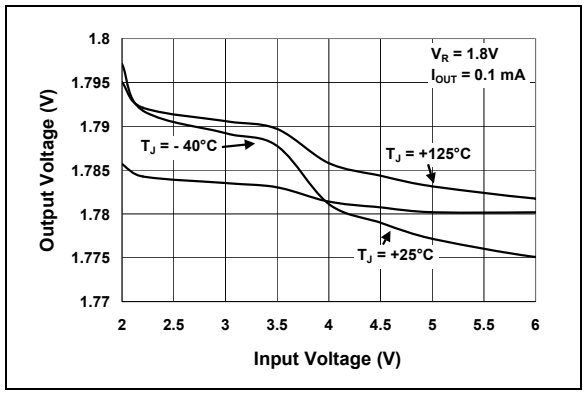

FIGURE 2-5: *Output Voltage vs. Input Voltage (V_R = 1.8V).*

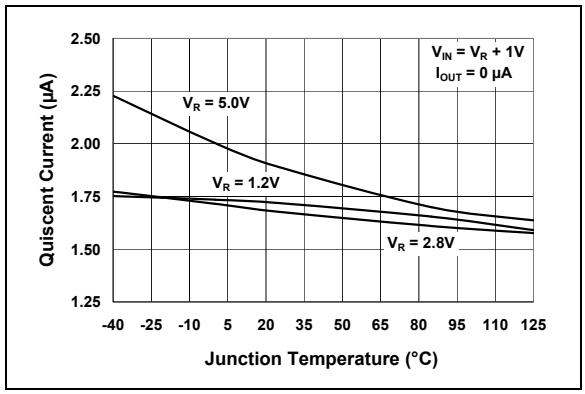

FIGURE 2-3: *Quiescent Current vs. Junction Temperature.*

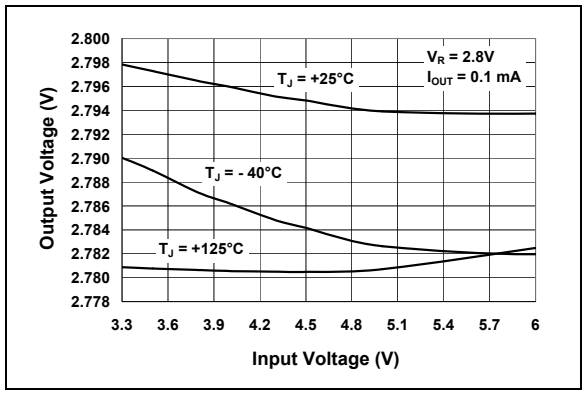

FIGURE 2-6: *Output Voltage vs. Input Voltage (V_R = 2.8V).*

Note: Unless otherwise indicated: V_R = 1.8V, C_{OUT} = 1 µF Ceramic (X7R), C_{IN} = 1 µF Ceramic (X7R), I_L = 100 µA, T_A = +25°C, V_{IN} = V_R +1V.

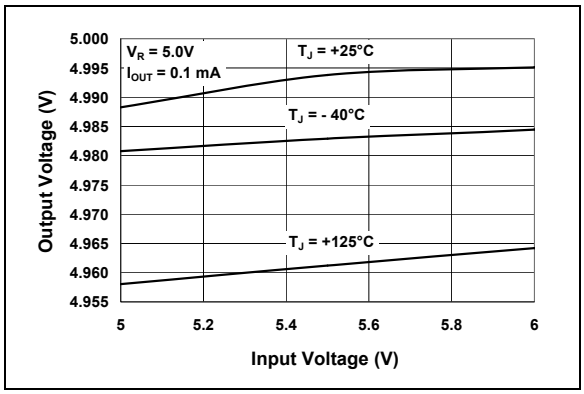

FIGURE 2-7: *Output Voltage vs. Input Voltage (V_R = 5.0V).*

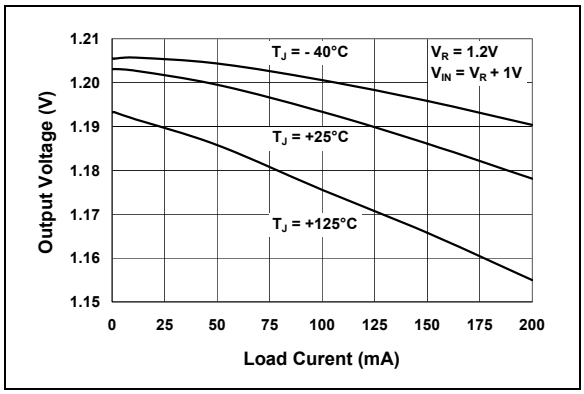

FIGURE 2-8: *Output Voltage vs. Load Current (V_R = 1.2V).*

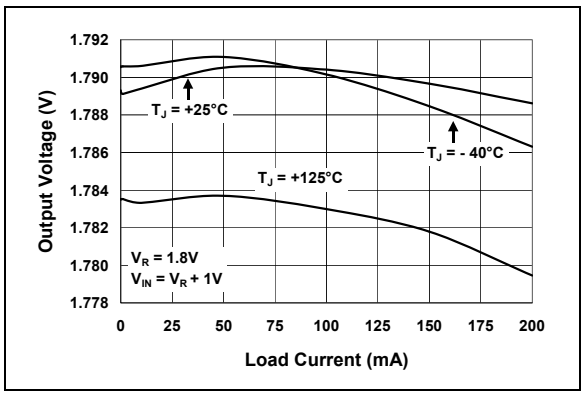

FIGURE 2-9: *Output Voltage vs. Load Current (V_R = 1.8V).*

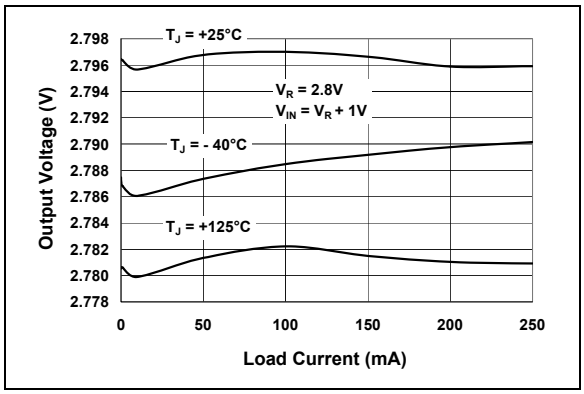

FIGURE 2-10: *Output Voltage vs. Load Current (V_R = 2.8V).*

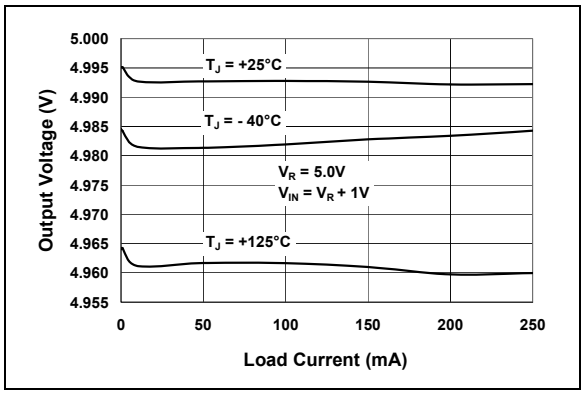

FIGURE 2-11: *Output Voltage vs. Load Current (V_R = 5.0V).*

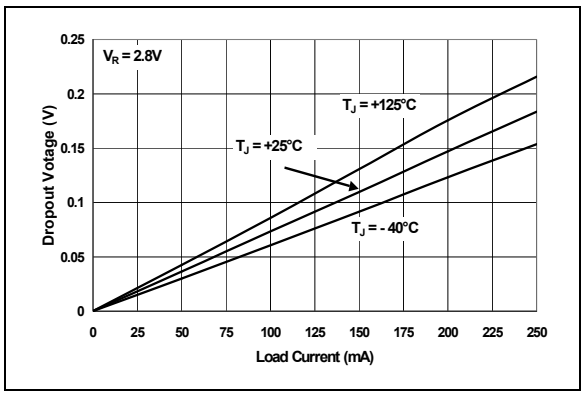

FIGURE 2-12: *Dropout Voltage vs. Load Current (V_R = 2.8V).*

© 2007 Microchip Technology Inc.

Note: Unless otherwise indicated: V_R = 1.8V, C_{OUT} = 1 µF Ceramic (X7R), C_{IN} = 1 µF Ceramic (X7R), I_L = 100 µA, T_A = +25°C, V_{IN} = V_R +1V.

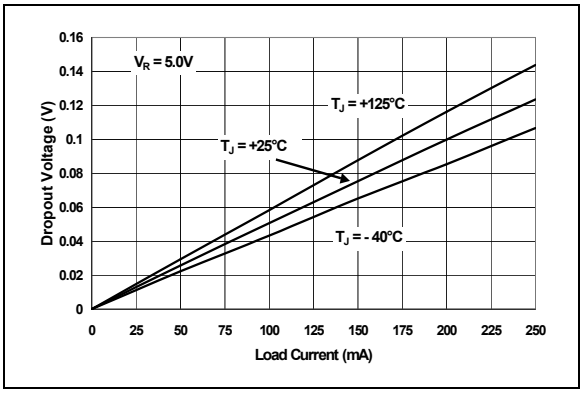

FIGURE 2-13: *Dropout Voltage vs. Load Current (V_R = 5.0V).*

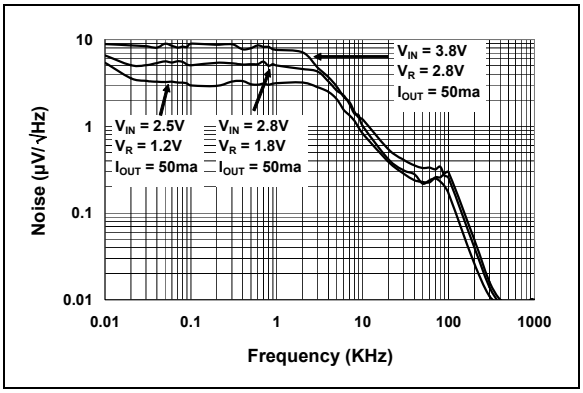

FIGURE 2-16: *Noise vs. Frequency.*

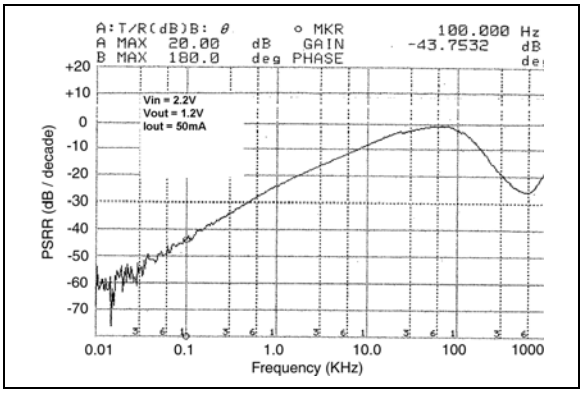

FIGURE 2-14: *Power Supply Ripple Rejection vs. Frequency (V_R = 1.2V).*

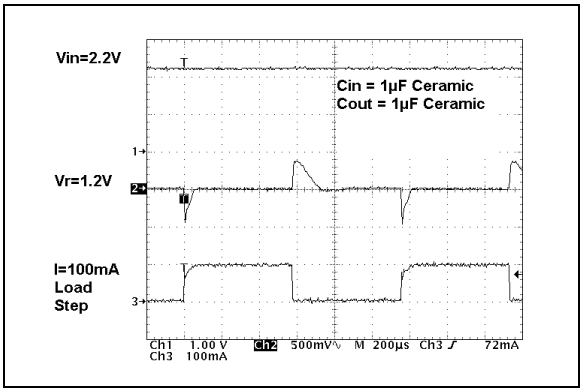

FIGURE 2-17: *Dynamic Load Step (V_R = 1.2V).*

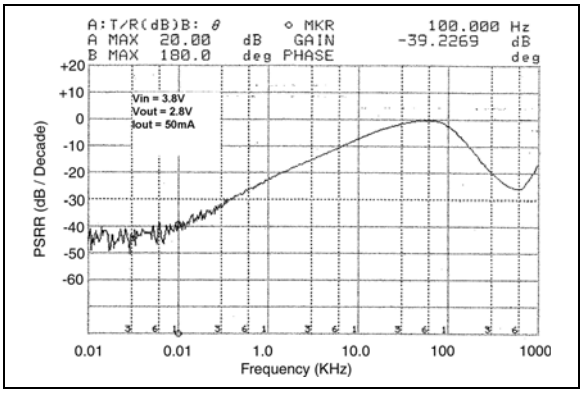

FIGURE 2-15: *Power Supply Ripple Rejection vs. Frequency (V_R = 2.8V).*

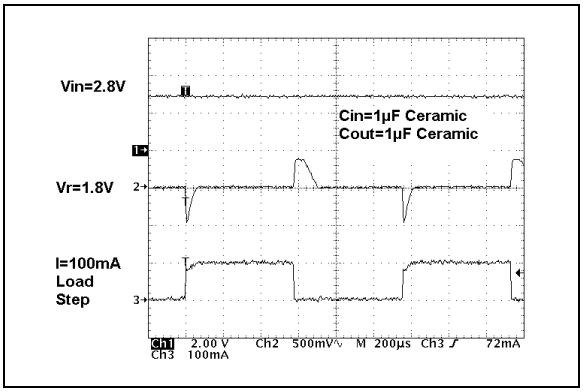

FIGURE 2-18: *Dynamic Load Step (V_R = 1.8V).*

Note: Unless otherwise indicated: V_R = 1.8V, C_{OUT} = 1 µF Ceramic (X7R), C_{IN} = µF Ceramic (X7R), I_L = 100 µA, T_A = +25°C, V_{IN} = V_R +1V.

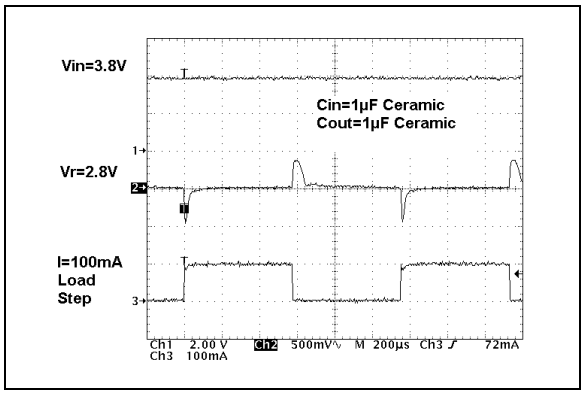

FIGURE 2-19: *Dynamic Load Step (V_R = 2.8V).*

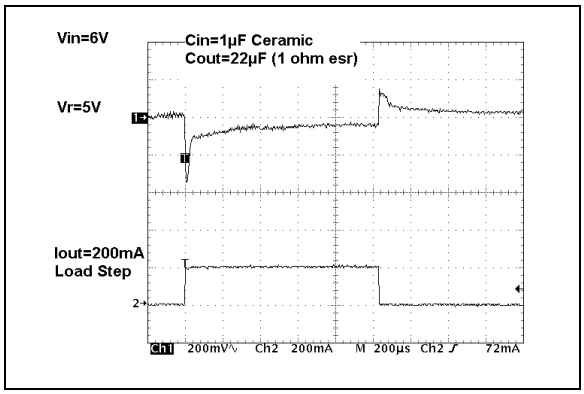

FIGURE 2-22: *Dynamic Load Step (V_R = 5.0V).*

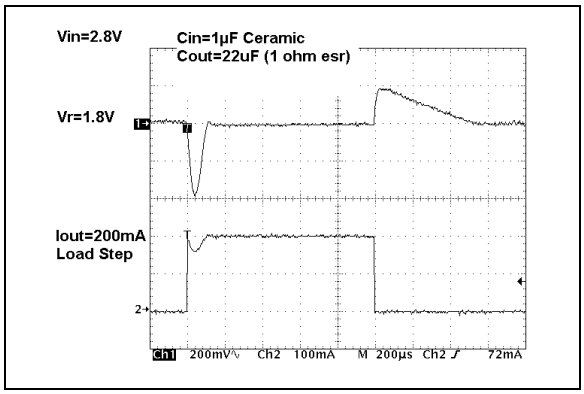

FIGURE 2-20: *Dynamic Load Step (V_R = 1.8V).*

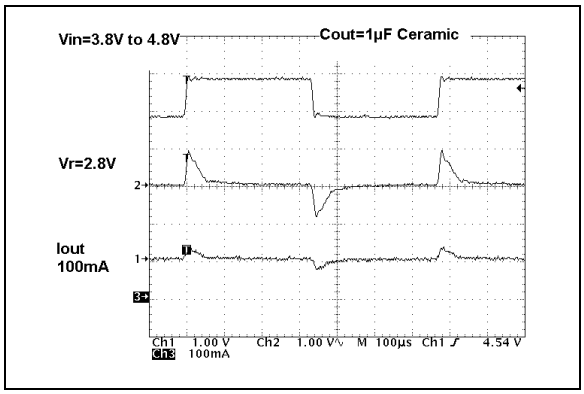

FIGURE 2-23: *Dynamic Line Step (V_R = 2.8V).*

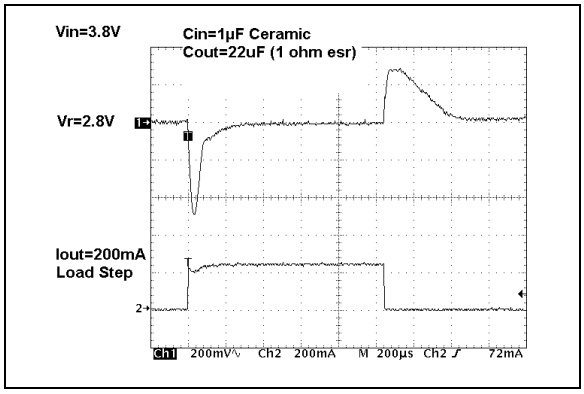

FIGURE 2-21: *Dynamic Load Step (V_R = 2.8V).*

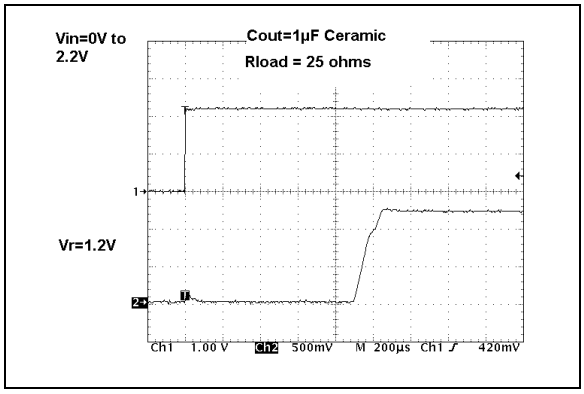

FIGURE 2-24: *Startup From V_{IN} (V_R = 1.2V).*

© 2007 Microchip Technology Inc.

Note: Unless otherwise indicated: V_R = 1.8V, C_{OUT} = 1 µF Ceramic (X7R), C_{IN} = 1 µF Ceramic (X7R), I_L = 100 µA, T_A = +25°C, V_{IN} = V_R +1V.

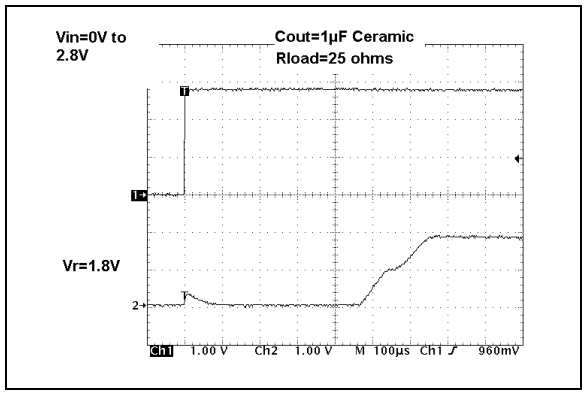

FIGURE 2-25: *Start-up From V_{IN} (V_R = 1.8V).*

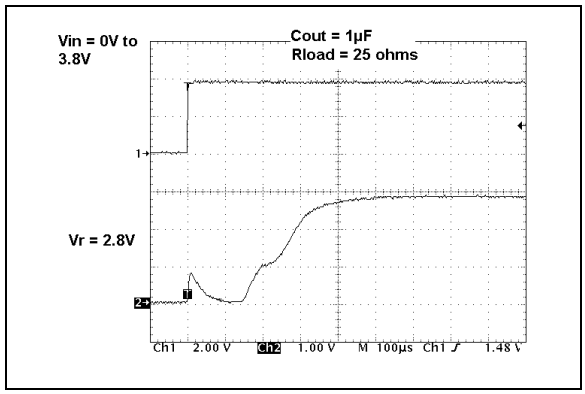

FIGURE 2-26: *Start-up From V_{IN} (V_R = 2.8V).*

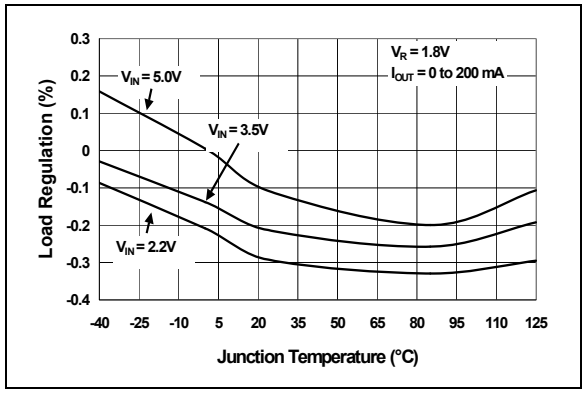

FIGURE 2-27: *Load Regulation vs. Junction Temperature (V_R = 1.8V).*

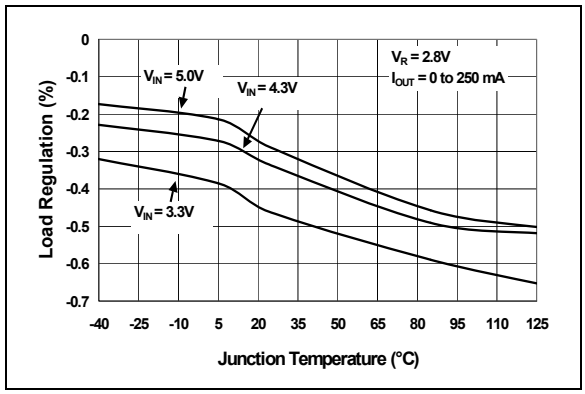

FIGURE 2-28: *Load Regulation vs. Junction Temperature (V_R = 2.8V).*

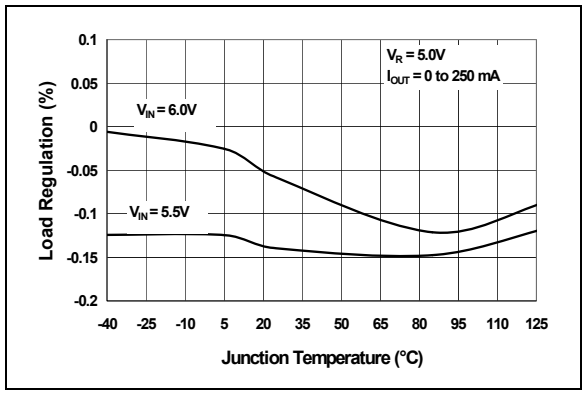

FIGURE 2-29: *Load Regulation vs. Junction Temperature (V_R = 5.0V).*

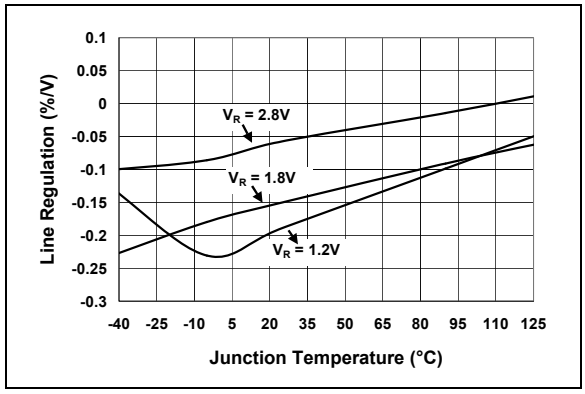

FIGURE 2-30: *Line Regulation vs. Temperature (V_R = 1.2V, 1.8V, 2.8V).*

3.0 PIN DESCRIPTIONS

The descriptions of the pins are listed in Table 3-1.

TABLE 3-1: PIN FUNCTION TABLE

Pin No. SOT-23	Pin No. SOT-89	Pin No. TO-92	Name	Function
1	1	1	GND	Ground Terminal
2	3	3	V_{OUT}	Regulated Voltage Output
3	2	2	V_{IN}	Unregulated Supply Voltage

3.1 Ground Terminal (GND)

Regulator ground. Tie GND to the negative side of the output and the negative side of the input capacitor. Only the LDO bias current (1.6 µA typical) flows out of this pin; there is no high current. The LDO output regulation is referenced to this pin. Minimize voltage drops between this pin and the negative side of the load.

3.2 Regulated Output Voltage (V_{OUT})

Connect V_{OUT} to the positive side of the load and the positive terminal of the output capacitor. The positive side of the output capacitor should be physically located as close to the LDO V_{OUT} pin as is practical. The current flowing out of this pin is equal to the DC load current.

3.3 Unregulated Input Voltage Pin (V_{IN})

Connect V_{IN} to the input unregulated source voltage. Like all low dropout linear regulators, low source impedance is necessary for the stable operation of the LDO. The amount of capacitance required to ensure low source impedance will depend on the proximity of the input source capacitors or battery type. For most applications, 1 µF of capacitance will ensure stable operation of the LDO circuit. For applications that have load currents below 100 mA, the input capacitance requirement can be lowered. The type of capacitor used can be ceramic, tantalum or aluminum electrolytic. The low ESR characteristics of the ceramic will yield better noise and PSRR performance at high frequency.

© 2007 Microchip Technology Inc.

4.0 DETAILED DESCRIPTION

4.1 Output Regulation

A portion of the LDO output voltage is fed back to the internal error amplifier and compared with the precision internal bandgap reference. The error amplifier output will adjust the amount of current that flows through the P-Channel pass transistor, thus regulating the output voltage to the desired value. Any changes in input voltage or output current will cause the error amplifier to respond and adjust the output voltage to the target voltage (refer to Figure 4-1).

4.2 Overcurrent

The MCP1700 internal circuitry monitors the amount of current flowing through the P-Channel pass transistor. In the event of a short-circuit or excessive output current, the MCP1700 will turn off the P-Channel device for a short period, after which the LDO will attempt to restart. If the excessive current remains, the cycle will repeat itself.

4.3 Overtemperature

The internal power dissipation within the LDO is a function of input-to-output voltage differential and load current. If the power dissipation within the LDO is excessive, the internal junction temperature will rise above the typical shutdown threshold of 140°C. At that point, the LDO will shut down and begin to cool to the typical turn-on junction temperature of 130°C. If the power dissipation is low enough, the device will continue to cool and operate normally. If the power dissipation remains high, the thermal shutdown protection circuitry will again turn off the LDO, protecting it from catastrophic failure.

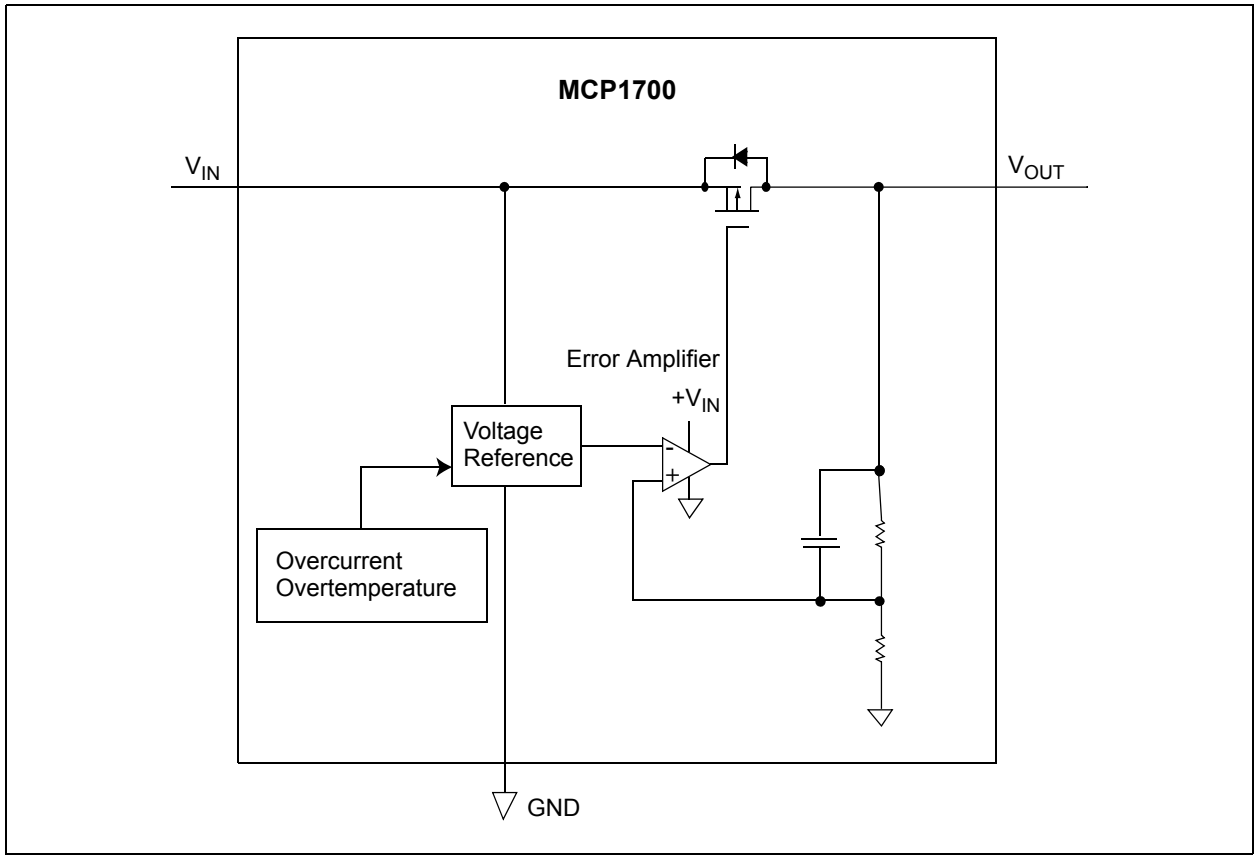

FIGURE 4-1: *Block Diagram.*

5.0 FUNCTIONAL DESCRIPTION

The MCP1700 CMOS low dropout linear regulator is intended for applications that need the lowest current consumption while maintaining output voltage regulation. The operating continuous load range of the MCP1700 is from 0 mA to 250 mA ($V_R \geq 2.5V$). The input operating voltage range is from 2.3V to 6.0V, making it capable of operating from two, three or four alkaline cells or a single Li-Ion cell battery input.

5.1 Input

The input of the MCP1700 is connected to the source of the P-Channel PMOS pass transistor. As with all LDO circuits, a relatively low source impedance (10Ω) is needed to prevent the input impedance from causing the LDO to become unstable. The size and type of the capacitor needed depends heavily on the input source type (battery, power supply) and the output current range of the application. For most applications (up to 100 mA), a 1 µF ceramic capacitor will be sufficient to ensure circuit stability. Larger values can be used to improve circuit AC performance.

5.2 Output

The maximum rated continuous output current for the MCP1700 is 250 mA ($V_R \geq 2.5V$). For applications where $V_R < 2.5V$, the maximum output current is 200 mA.

A minimum output capacitance of 1.0 µF is required for small signal stability in applications that have up to 250 mA output current capability. The capacitor type can be ceramic, tantalum or aluminum electrolytic. The esr range on the output capacitor can range from 0Ω to 2.0Ω.

5.3 Output Rise time

When powering up the internal reference output, the typical output rise time of 500 µs is controlled to prevent overshoot of the output voltage.

© 2007 Microchip Technology Inc.

6.0 APPLICATION CIRCUITS & ISSUES

6.1 Typical Application

The MCP1700 is most commonly used as a voltage regulator. It's low quiescent current and low dropout voltage make it ideal for many battery-powered applications.

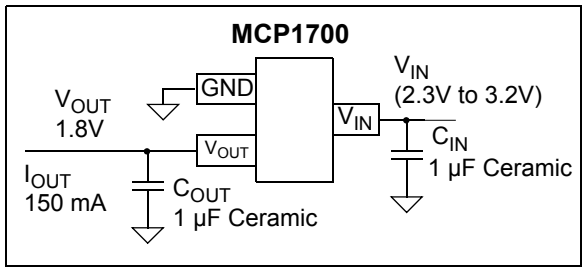

FIGURE 6-1: *Typical Application Circuit.*

6.1.1 APPLICATION INPUT CONDITIONS

Package Type = SOT-23
Input Voltage Range = 2.3V to 3.2V
V_{IN} maximum = 3.2V
V_{OUT} typical = 1.8V
I_{OUT} = 150 mA maximum

6.2 Power Calculations

6.2.1 POWER DISSIPATION

The internal power dissipation of the MCP1700 is a function of input voltage, output voltage and output current. The power dissipation, as a result of the quiescent current draw, is so low, it is insignificant (1.6 µA x V_{IN}). The following equation can be used to calculate the internal power dissipation of the LDO.

EQUATION 6-1:

$$P_{LDO} = (V_{IN(MAX))} - V_{OUT(MIN)}) \times I_{OUT(MAX))}$$

P_{LDO} = LDO Pass device internal power dissipation

$V_{IN(MAX)}$ = Maximum input voltage

$V_{OUT(MIN)}$ = LDO minimum output voltage

The maximum continuous operating junction temperature specified for the MCP1700 is +125°C. To estimate the internal junction temperature of the MCP1700, the total internal power dissipation is multiplied by the thermal resistance from junction to ambient ($R\theta_{JA}$). The thermal resistance from junction to ambient for the SOT-23 pin package is estimated at 230°C/W.

EQUATION 6-2:

$$T_{J(MAX)} = P_{TOTAL} \times R\theta_{JA} + T_{AMAX}$$

$T_{J(MAX)}$ = Maximum continuous junction temperature.

P_{TOTAL} = Total device power dissipation.

$R\theta_{JA}$ = Thermal resistance from junction to ambient.

T_{AMAX} = Maximum ambient temperature.

The maximum power dissipation capability for a package can be calculated given the junction-to-ambient thermal resistance and the maximum ambient temperature for the application. The following equation can be used to determine the package maximum internal power dissipation.

EQUATION 6-3:

$$P_{D(MAX)} = \frac{(T_{J(MAX)} - T_{A(MAX)})}{R\theta_{JA}}$$

$P_{D(MAX)}$ = Maximum device power dissipation.

$T_{J(MAX)}$ = Maximum continuous junction temperature.

$T_{A(MAX)}$ = Maximum ambient temperature.

$R\theta_{JA}$ = Thermal resistance from junction to ambient.

EQUATION 6-4:

$$T_{J(RISE)} = P_{D(MAX)} \times R\theta_{JA}$$

$T_{J(RISE)}$ = Rise in device junction temperature over the ambient temperature.

P_{TOTAL} = Maximum device power dissipation.

$R\theta_{JA}$ = Thermal resistance from junction to ambient.

EQUATION 6-5:

$$T_J = T_{J(RISE)} + T_A$$

T_J = Junction Temperature.

$T_{J(RISE)}$ = Rise in device junction temperature over the ambient temperature.

T_A = Ambient temperature.

6.3 Voltage Regulator

Internal power dissipation, junction temperature rise, junction temperature and maximum power dissipation are calculated in the following example. The power dissipation, as a result of ground current, is small enough to be neglected.

6.3.1 POWER DISSIPATION EXAMPLE

Package

Package Type = SOT-23

Input Voltage

V_{IN} = 2.3V to 3.2V

LDO Output Voltages and Currents

V_{OUT} = 1.8V

I_{OUT} = 150 mA

Maximum Ambient Temperature

$T_{A(MAX)}$ = +40°C

Internal Power Dissipation

Internal Power dissipation is the product of the LDO output current times the voltage across the LDO (V_{IN} to V_{OUT}).

$P_{LDO(MAX)} = (V_{IN(MAX)} - V_{OUT(MIN)}) \times I_{OUT(MAX)}$

$P_{LDO} = (3.2V - (0.97 \times 1.8V)) \times 150$ mA

P_{LDO} = 218.1 milli-Watts

Device Junction Temperature Rise

The internal junction temperature rise is a function of internal power dissipation and the thermal resistance from junction to ambient for the application. The thermal resistance from junction to ambient ($R\theta_{JA}$) is derived from an EIA/JEDEC standard for measuring thermal resistance for small surface mount packages. The EIA/JEDEC specification is JESD51-7, "High Effective Thermal Conductivity Test Board for Leaded Surface Mount Packages". The standard describes the test method and board specifications for measuring the thermal resistance from junction to ambient. The actual thermal resistance for a particular application can vary depending on many factors, such as copper area and thickness. Refer to AN792, "A Method to Determine How Much Power a SOT-23 Can Dissipate in an Application", (DS00792), for more information regarding this subject.

$T_{J(RISE)} = P_{TOTAL} \times Rq_{JA}$

T_{JRISE} = 218.1 milli-Watts x 230.0°C/Watt

T_{JRISE} = 50.2°C

Junction Temperature Estimate

To estimate the internal junction temperature, the calculated temperature rise is added to the ambient or offset temperature. For this example, the worst-case junction temperature is estimated below.

$T_J = T_{JRISE} + T_{A(MAX)}$

T_J = 90.2°C

Maximum Package Power Dissipation at +40°C Ambient Temperature

SOT-23 (230.0°C/Watt = $R\theta_{JA}$)

$P_{D(MAX)}$ = (125°C - 40°C) / 230°C/W

$P_{D(MAX)}$ = 369.6 milli-Watts

SOT-89 (52°C/Watt = $R\theta_{JA}$)

$P_{D(MAX)}$ = (125°C - 40°C) / 52°C/W

$P_{D(MAX)}$ = 1.635 Watts

TO-92 (131.9°C/Watt = $R\theta_{JA}$)

$P_{D(MAX)}$ = (125°C - 40°C) / 131.9°C/W

$P_{D(MAX)}$ = 644 milli-Watts

6.4 Voltage Reference

The MCP1700 can be used not only as a regulator, but also as a low quiescent current voltage reference. In many microcontroller applications, the initial accuracy of the reference can be calibrated using production test equipment or by using a ratio measurement. When the initial accuracy is calibrated, the thermal stability and line regulation tolerance are the only errors introduced by the MCP1700 LDO. The low cost, low quiescent current and small ceramic output capacitor are all advantages when using the MCP1700 as a voltage reference.

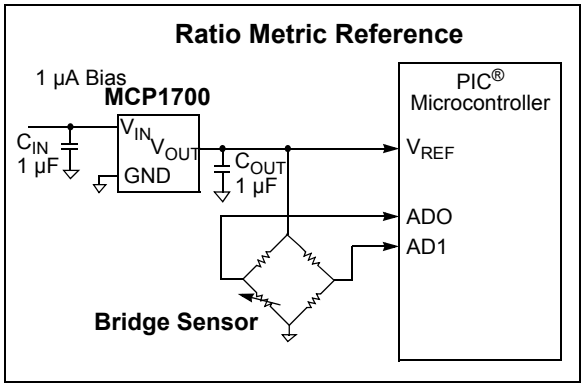

FIGURE 6-2: *Using the MCP1700 as a voltage reference.*

6.5 Pulsed Load Applications

For some applications, there are pulsed load current events that may exceed the specified 250 mA maximum specification of the MCP1700. The internal current limit of the MCP1700 will prevent high peak load demands from causing non-recoverable damage. The 250 mA rating is a maximum average continuous rating. As long as the average current does not exceed 250 mA, pulsed higher load currents can be applied to the MCP1700. The typical current limit for the MCP1700 is 550 mA (T_A +25°C).

© 2007 Microchip Technology Inc.

7.0 PACKAGING INFORMATION

7.1 Package Marking Information

3-Pin SOT-23

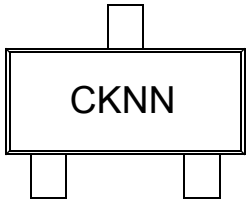

Standard	
Extended Temp	
Symbol	**Voltage ***
CK	1.2
CM	1.8
CP	2.5
CR	3.0
CS	3.3
CU	5.0

* Custom output voltages available upon request.

Contact your local Microchip sales office for more information.

3-Pin SOT-89

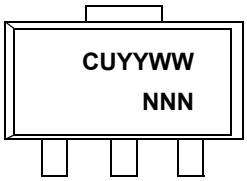

3-Pin TO-92

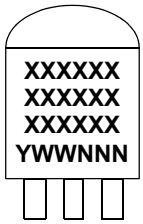

Example:



Legend:	XX...X	Customer-specific information
	Y	Year code (last digit of calendar year)
	YY	Year code (last 2 digits of calendar year)
	WW	Week code (week of January 1 is week ‘01’)
	NNN	Alphanumeric traceability code
	(e3)	Pb-free JEDEC designator for Matte Tin (Sn)
	*	This package is Pb-free. The Pb-free JEDEC designator ((e3)) can be found on the outer packaging for this package.

Note: In the event the full Microchip part number cannot be marked on one line, it will be carried over to the next line, thus limiting the number of available characters for customer-specific information.

3-Lead Plastic Small Outline Transistor (TT or NB) [SOT-23]

Note: For the most current package drawings, please see the Microchip Packaging Specification located at http://www.microchip.com/packaging

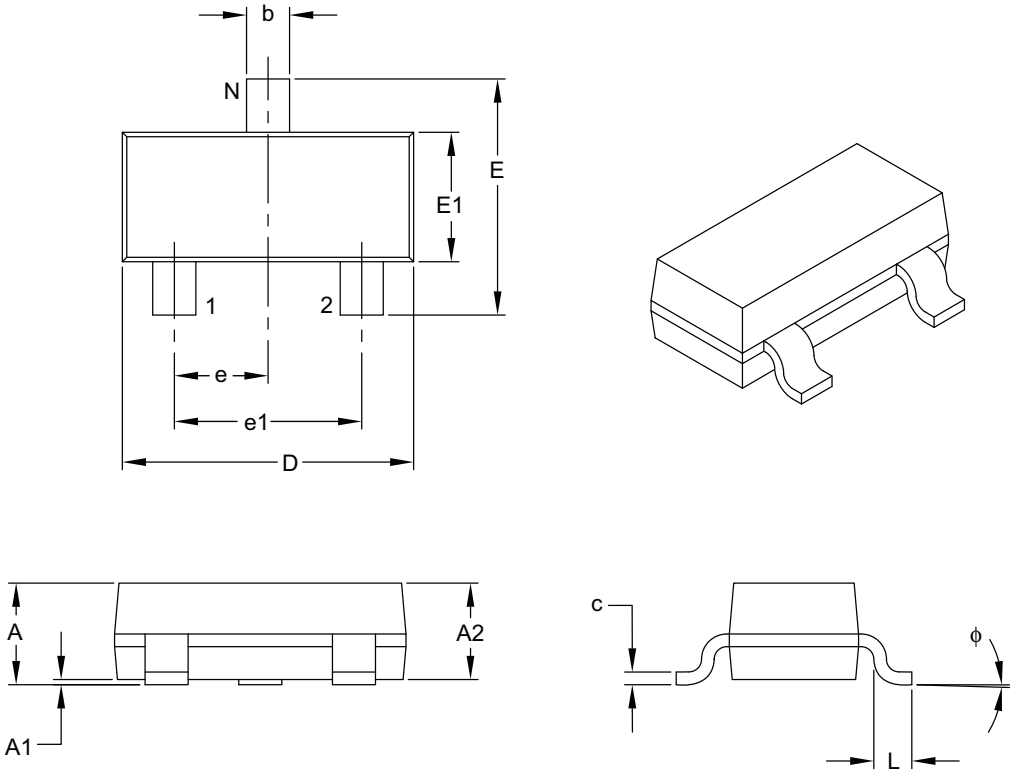

Units		MILLIMETERS		
Dimension Limits		MIN	NOM	MAX
Number of Pins	N		3	
Lead Pitch	e		0.95 BSC	
Outside Lead Pitch	e1		1.90 BSC	
Overall Height	A	0.89	–	1.12
Molded Package Thickness	A2	0.79	0.95	1.02
Standoff	A1	0.01	–	0.10
Overall Width	E	2.10	–	2.64
Molded Package Width	E1	1.16	1.30	1.40
Overall Length	D	2.67	2.90	3.05
Foot Length	L	0.13	0.50	0.60
Foot Angle	ϕ	0°	–	10°
Lead Thickness	c	0.08	–	0.20
Lead Width	b	0.30	–	0.54

Notes:

1. Dimensions D and E1 do not include mold flash or protrusions. Mold flash or protrusions shall not exceed 0.25 mm per side.
2. Dimensioning and tolerancing per ASME Y14.5M.

BSC: Basic Dimension. Theoretically exact value shown without tolerances.

Microchip Technology Drawing C04-104B

© 2007 Microchip Technology Inc.

3-Lead Plastic Small Outline Transistor Header (MB) [SOT-89]

Note: For the most current package drawings, please see the Microchip Packaging Specification located at http://www.microchip.com/packaging

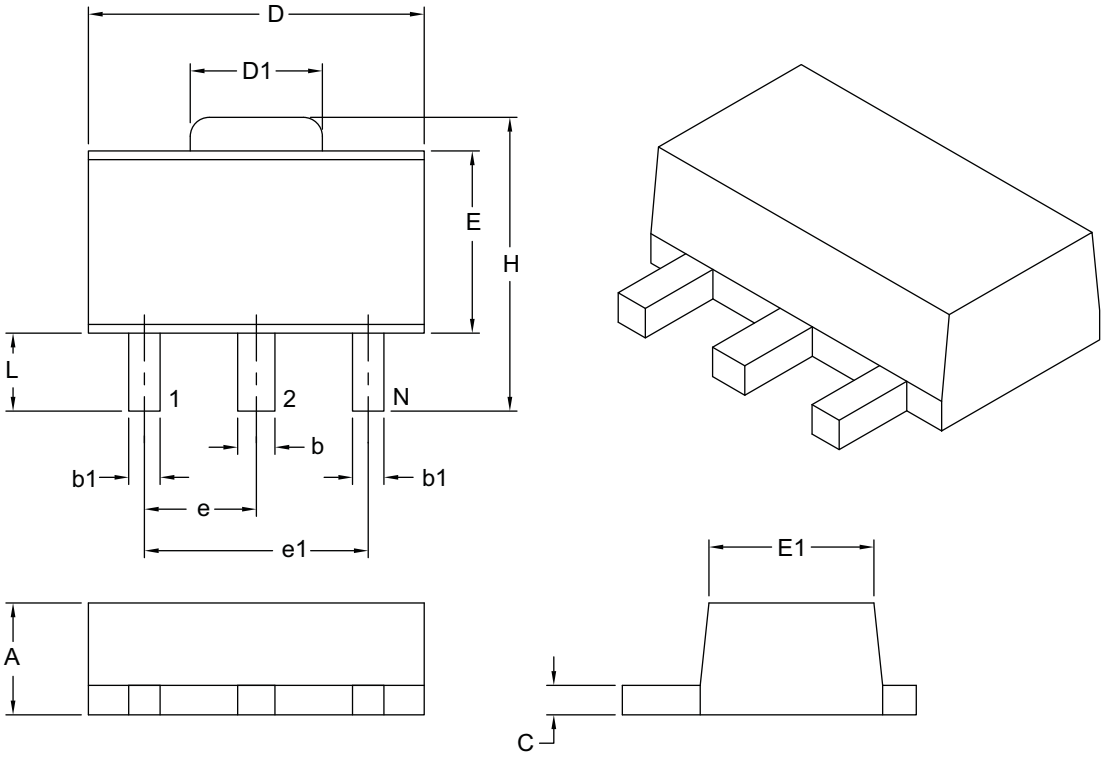

Units		MILLIMETERS	
Dimension Limits		MIN	MAX
Number of Leads	N	3	
Pitch	e	1.50 BSC	
Outside Lead Pitch	e1	3.00 BSC	
Overall Height	A	1.40	1.60
Overall Width	H	3.94	4.25
Molded Package Width at Base	E	2.29	2.60
Molded Package Width at Top	E1	2.13	2.29
Overall Length	D	4.39	4.60
Tab Length	D1	1.40	1.83
Foot Length	L	0.79	1.20
Lead Thickness	c	0.35	0.44
Lead 2 Width	b	0.41	0.56
Leads 1 & 3 Width	b1	0.36	0.48

Notes:

1. Dimensions D and E do not include mold flash or protrusions. Mold flash or protrusions shall not exceed 0.127 mm per side.
2. Dimensioning and tolerancing per ASME Y14.5M.

BSC: Basic Dimension. Theoretically exact value shown without tolerances.

Microchip Technology Drawing C04-029B

3-Lead Plastic Transistor Outline (TO or ZB) [TO-92]

Note: For the most current package drawings, please see the Microchip Packaging Specification located at http://www.microchip.com/packaging

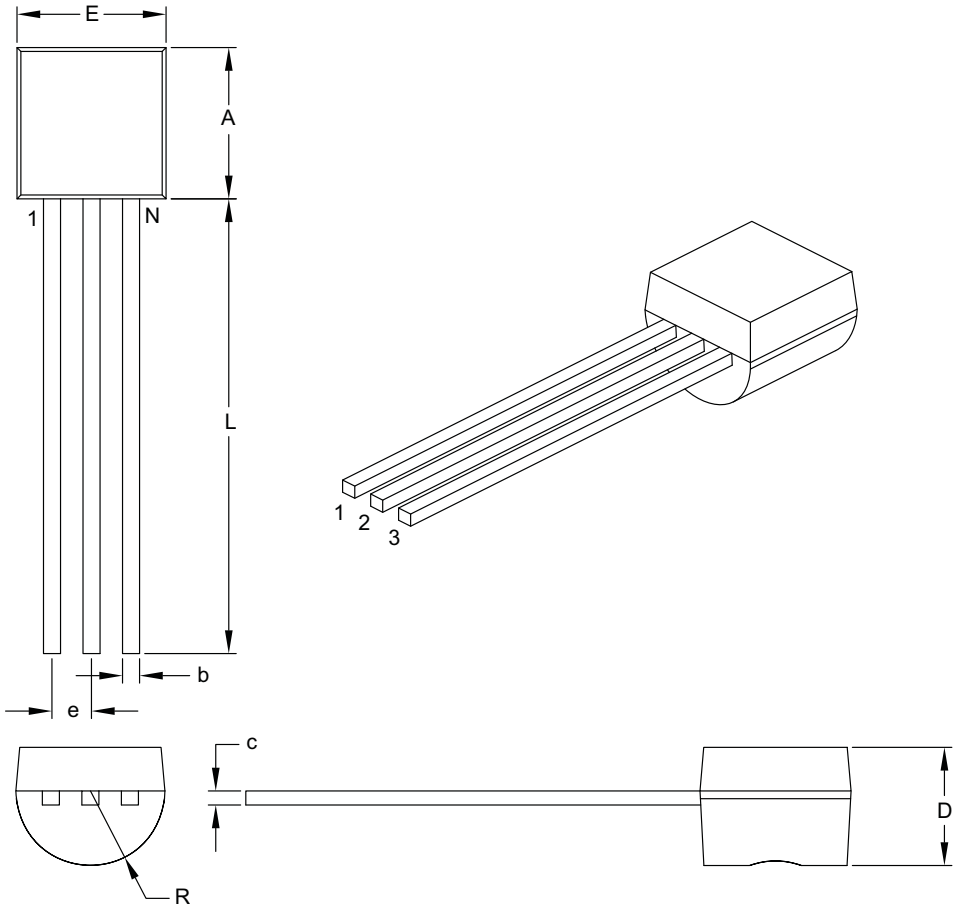

Units		INCHES	
Dimension Limits		MIN	MAX
Number of Pins	N	3	
Pitch	e	.050 BSC	
Bottom to Package Flat	D	.125	.165
Overall Width	E	.175	.205
Overall Length	A	.170	.210
Molded Package Radius	R	.080	.105
Tip to Seating Plane	L	.500	–
Lead Thickness	c	.014	.021
Lead Width	b	.014	.022

Notes:

1. Dimensions A and E do not include mold flash or protrusions. Mold flash or protrusions shall not exceed .005" per side.
2. Dimensioning and tolerancing per ASME Y14.5M.

BSC: Basic Dimension. Theoretically exact value shown without tolerances.

Microchip Technology Drawing C04-101B

© 2007 Microchip Technology Inc.

APPENDIX A: REVISION HISTORY

Revision B (February 2007)

- Updated Packaging Information.
- Corrected **Section "Product Identification System"**.
- Changed X5R to X7R in Notes to **"DC Characteristics"**, **"Temperature Specifications"**, and **"Typical Performance Curves"** .

Revision A (November 2005)

- Original Release of this Document.

NOTES:

© 2007 Microchip Technology Inc.

PRODUCT IDENTIFICATION SYSTEM

To order or obtain information, e.g., on pricing or delivery, refer to the factory or the listed sales office.

PART NO.	X-	XXX	X	X	/XX
MCP1700	Tape & Reel	Voltage Output	Tolerance	Temp. Range	Package

Device:	MCP1700: Low Quiescent Current LDO	
Tape and Reel:	T:	Tape and Reel only applies to SOT-23 and SOT-89 devices
Standard Output Voltage: *	120 = 1.2V 180 = 1.8V 250 = 2.5V 300 = 3.0V 330 = 3.3V 500 = 5.0V	* Custom output voltages available upon request. Contact your local Microchip sales office for more information
Tolerance:	2 = 2%	
Temperature Range:	E = -40°C to +125°C (Extended)	
Package:	MB = Plastic Small Outline Transistor (SOT-89), 3-lead TO = Plastic Small Outline Transistor (TO-92), 3-lead TT = Plastic Small Outline Transistor SOT-23), 3-lead	

Examples:

SOT-89 Package:

a) MCP1700T-1202E/MB: 1.2V V_{OUT}
b) MCP1700T-1802E/MB: 1.8V V_{OUT}
c) MCP1700T-2502E/MB: 2.5V V_{OUT}
d) MCP1700T-3002E/MB: 3.0V V_{OUT}
e) MCP1700T-3302E/MB: 3.3V V_{OUT}
f) MCP1700T-5002E/MB: 5.0V V_{OUT}

TO-92 Package:

g) MCP1700-1202E/TO: 1.2V V_{OUT}
h) MCP1700-1802E/TO: 1.8V V_{OUT}
i) MCP1700-2502E/TO: 2.5V V_{OUT}
j) MCP1700-3002E/TO: 3.0V V_{OUT}
k) MCP1700-3302E/TO: 3.3V V_{OUT}
l) MCP1700-5002E/TO: 5.0V V_{OUT}

SOT-23 Package:

a) MCP1700T-1202E/TT: 1.2V V_{OUT}
b) MCP1700T-1802E/TT: 1.8V V_{OUT}
c) MCP1700T-2502E/TT: 2.5V V_{OUT}
d) MCP1700T-3002E/TT: 3.0V V_{OUT}
e) MCP1700T-3302E/TT: 3.3V V_{OUT}
f) MCP1700T-5002E/TT: 5.0V V_{OUT}

© 2007 Microchip Technology Inc.

NOTES:

© 2007 Microchip Technology Inc.

Note the following details of the code protection feature on Microchip devices:

- Microchip products meet the specification contained in their particular Microchip Data Sheet.
- Microchip believes that its family of products is one of the most secure families of its kind on the market today, when used in the intended manner and under normal conditions.
- There are dishonest and possibly illegal methods used to breach the code protection feature. All of these methods, to our knowledge, require using the Microchip products in a manner outside the operating specifications contained in Microchip's Data Sheets. Most likely, the person doing so is engaged in theft of intellectual property.
- Microchip is willing to work with the customer who is concerned about the integrity of their code.
- Neither Microchip nor any other semiconductor manufacturer can guarantee the security of their code. Code protection does not mean that we are guaranteeing the product as "unbreakable."

Code protection is constantly evolving. We at Microchip are committed to continuously improving the code protection features of our products. Attempts to break Microchip's code protection feature may be a violation of the Digital Millennium Copyright Act. If such acts allow unauthorized access to your software or other copyrighted work, you may have a right to sue for relief under that Act.

Information contained in this publication regarding device applications and the like is provided only for your convenience and may be superseded by updates. It is your responsibility to ensure that your application meets with your specifications. MICROCHIP MAKES NO REPRESENTATIONS OR WARRANTIES OF ANY KIND WHETHER EXPRESS OR IMPLIED, WRITTEN OR ORAL, STATUTORY OR OTHERWISE, RELATED TO THE INFORMATION, INCLUDING BUT NOT LIMITED TO ITS CONDITION, QUALITY, PERFORMANCE, MERCHANTABILITY OR FITNESS FOR PURPOSE**.** Microchip disclaims all liability arising from this information and its use. Use of Microchip devices in life support and/or safety applications is entirely at the buyer's risk, and the buyer agrees to defend, indemnify and hold harmless Microchip from any and all damages, claims, suits, or expenses resulting from such use. No licenses are conveyed, implicitly or otherwise, under any Microchip intellectual property rights.

Trademarks

The Microchip name and logo, the Microchip logo, Accuron, dsPIC, KEELOQ, KEELOQ logo, microID, MPLAB, PIC, PICmicro, PICSTART, PRO MATE, PowerSmart, rfPIC, and SmartShunt are registered trademarks of Microchip Technology Incorporated in the U.S.A. and other countries.

AmpLab, FilterLab, Linear Active Thermistor, Migratable Memory, MXDEV, MXLAB, PS logo, SEEVAL, SmartSensor and The Embedded Control Solutions Company are registered trademarks of Microchip Technology Incorporated in the U.S.A.

Analog-for-the-Digital Age, Application Maestro, CodeGuard, dsPICDEM, dsPICDEM.net, dsPICworks, ECAN, ECONOMONITOR, FanSense, FlexROM, fuzzyLAB, In-Circuit Serial Programming, ICSP, ICEPIC, Mindi, MiWi, MPASM, MPLAB Certified logo, MPLIB, MPLINK, PICkit, PICDEM, PICDEM.net, PICLAB, PICtail, PowerCal, PowerInfo, PowerMate, PowerTool, REAL ICE, rfLAB, rfPICDEM, Select Mode, Smart Serial, SmartTel, Total Endurance, UNI/O, WiperLock and ZENA are trademarks of Microchip Technology Incorporated in the U.S.A. and other countries.

SQTP is a service mark of Microchip Technology Incorporated in the U.S.A.

All other trademarks mentioned herein are property of their respective companies.

© 2007, Microchip Technology Incorporated, Printed in the U.S.A., All Rights Reserved.

Printed on recycled paper.

QUALITY MANAGEMENT SYSTEM
CERTIFIED BY DNV
ISO/TS 16949:2002

Microchip received ISO/TS-16949:2002 certification for its worldwide headquarters, design and wafer fabrication facilities in Chandler and Tempe, Arizona, Gresham, Oregon and Mountain View, California. The Company's quality system processes and procedures are for its PIC® MCUs and dsPIC® DSCs, KEELOQ® code hopping devices, Serial EEPROMs, microperipherals, nonvolatile memory and analog products. In addition, Microchip's quality system for the design and manufacture of development systems is ISO 9001:2000 certified.

WORLDWIDE SALES AND SERVICE

AMERICAS

Corporate Office
2355 West Chandler Blvd.
Chandler, AZ 85224-6199
Tel: 480-792-7200
Fax: 480-792-7277
Technical Support:
http://support.microchip.com
Web Address:
www.microchip.com

Atlanta
Duluth, GA
Tel: 678-957-9614
Fax: 678-957-1455

Boston
Westborough, MA
Tel: 774-760-0087
Fax: 774-760-0088

Chicago
Itasca, IL
Tel: 630-285-0071
Fax: 630-285-0075

Dallas
Addison, TX
Tel: 972-818-7423
Fax: 972-818-2924

Detroit
Farmington Hills, MI
Tel: 248-538-2250
Fax: 248-538-2260

Kokomo
Kokomo, IN
Tel: 765-864-8360
Fax: 765-864-8387

Los Angeles
Mission Viejo, CA
Tel: 949-462-9523
Fax: 949-462-9608

Santa Clara
Santa Clara, CA
Tel: 408-961-6444
Fax: 408-961-6445

Toronto
Mississauga, Ontario,
Canada
Tel: 905-673-0699
Fax: 905-673-6509

ASIA/PACIFIC

Asia Pacific Office
Suites 3707-14, 37th Floor
Tower 6, The Gateway
Habour City, Kowloon
Hong Kong
Tel: 852-2401-1200
Fax: 852-2401-3431

Australia - Sydney
Tel: 61-2-9868-6733
Fax: 61-2-9868-6755

China - Beijing
Tel: 86-10-8528-2100
Fax: 86-10-8528-2104

China - Chengdu
Tel: 86-28-8665-5511
Fax: 86-28-8665-7889

China - Fuzhou
Tel: 86-591-8750-3506
Fax: 86-591-8750-3521

China - Hong Kong SAR
Tel: 852-2401-1200
Fax: 852-2401-3431

China - Qingdao
Tel: 86-532-8502-7355
Fax: 86-532-8502-7205

China - Shanghai
Tel: 86-21-5407-5533
Fax: 86-21-5407-5066

China - Shenyang
Tel: 86-24-2334-2829
Fax: 86-24-2334-2393

China - Shenzhen
Tel: 86-755-8203-2660
Fax: 86-755-8203-1760

China - Shunde
Tel: 86-757-2839-5507
Fax: 86-757-2839-5571

China - Wuhan
Tel: 86-27-5980-5300
Fax: 86-27-5980-5118

China - Xian
Tel: 86-29-8833-7250
Fax: 86-29-8833-7256

ASIA/PACIFIC

India - Bangalore
Tel: 91-80-4182-8400
Fax: 91-80-4182-8422

India - New Delhi
Tel: 91-11-4160-8631
Fax: 91-11-4160-8632

India - Pune
Tel: 91-20-2566-1512
Fax: 91-20-2566-1513

Japan - Yokohama
Tel: 81-45-471- 6166
Fax: 81-45-471-6122

Korea - Gumi
Tel: 82-54-473-4301
Fax: 82-54-473-4302

Korea - Seoul
Tel: 82-2-554-7200
Fax: 82-2-558-5932 or
82-2-558-5934

Malaysia - Penang
Tel: 60-4-646-8870
Fax: 60-4-646-5086

Philippines - Manila
Tel: 63-2-634-9065
Fax: 63-2-634-9069

Singapore
Tel: 65-6334-8870
Fax: 65-6334-8850

Taiwan - Hsin Chu
Tel: 886-3-572-9526
Fax: 886-3-572-6459

Taiwan - Kaohsiung
Tel: 886-7-536-4818
Fax: 886-7-536-4803

Taiwan - Taipei
Tel: 886-2-2500-6610
Fax: 886-2-2508-0102

Thailand - Bangkok
Tel: 66-2-694-1351
Fax: 66-2-694-1350

EUROPE

Austria - Wels
Tel: 43-7242-2244-39
Fax: 43-7242-2244-393

Denmark - Copenhagen
Tel: 45-4450-2828
Fax: 45-4485-2829

France - Paris
Tel: 33-1-69-53-63-20
Fax: 33-1-69-30-90-79

Germany - Munich
Tel: 49-89-627-144-0
Fax: 49-89-627-144-44

Italy - Milan
Tel: 39-0331-742611
Fax: 39-0331-466781

Netherlands - Drunen
Tel: 31-416-690399
Fax: 31-416-690340

Spain - Madrid
Tel: 34-91-708-08-90
Fax: 34-91-708-08-91

UK - Wokingham
Tel: 44-118-921-5869
Fax: 44-118-921-5820

12/08/06

© 2007 Microchip Technology Inc.

ENTEGRECİ

Bu belge www.entegreci.com üzerinden sunulmaktadır.

Elektronik komponent tedarikinde Entegreci

Entegreci, Eskişehir merkezli, Türkiye geneline satış yapan bir elektronik komponent mağazasıdır. Entegreler (IC), mikrodenetleyiciler, transistörler, diyotlar, pasif elemanlar, konnektörler, modüller ve geliştirme kartları tek adetten seri üretim adetlerine kadar satılır. Ürün sayfalarında güncel stok durumunu, fiyatı ve datasheet bağlantısını bulabilirsiniz.

Parça koduyla arama

Üretici parça numarasını yazın; stok ve fiyatı hemen görün.

www.entegreci.com

Ürün kategorileri

Entegreden kapasitöre tüm elektronik komponent kategorileri.

Kategorilere göz atın

Üreticiler

Aradığınız üreticinin ürünlerini tek sayfada inceleyin.

Üreticileri görün

Toplu alım ve teklif

Listede olmayan ya da yüksek adetli parçalar için teklif isteyin.

Teklif isteyin

www.entegreci.com | **destek@entegreci.com** | **0850 305 90 34**

Entegreci is an online electronic components store based in Türkiye. Search by manufacturer part number to see stock, prices and datasheets for integrated circuits, microcontrollers, transistors, passive components and connectors, or request a quote for parts that are not listed.

Bu sayfa Entegreci tarafından eklenmiştir. Belgenin önceki sayfaları asıl yayıncısına aittir ve içeriği değiştirilmemiştir; en güncel sürüm için belgenin yayıncısına başvurun.