DN3135

N-Channel Depletion-Mode Vertical DMOS FET

Features

- High Input Impedance
- Low Input Capacitance
- Fast Switching Speeds
- Low On-resistance
- Free from Secondary Breakdown
- Low Input and Output Leakage

Applications

- Normally-on Switches
- Solid State Relays
- Converters
- Linear Amplifiers
- Constant-current Sources
- Power Supply Circuits
- Telecommunications

General Description

The DN3135 is a low-threshold, Depletion-mode (normally-on) transistor that utilizes an advanced vertical DMOS structure and a well-proven silicon gate manufacturing process. This combination produces a device with the power handling capabilities of bipolar transistors and the high input impedance and positive temperature coefficient inherent in MOS devices. Characteristic of all MOS structures, this device is free from thermal runaway and thermally induced secondary breakdown.

Microchip's vertical DMOS FETs are ideally suited to a wide range of switching and amplifying applications where very low threshold voltage, high breakdown voltage, high input impedance, low input capacitance and fast switching speeds are desired.

Package Types

SOT-23 (TO-236AB)
(Top view)

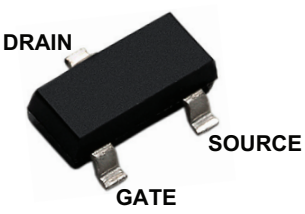

SOT-89 (TO-243AA)
(Top view)

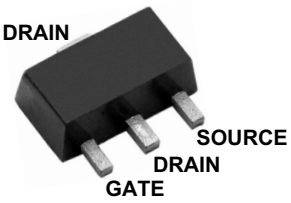

See Table 2-1 for pin information.

© 2017 Microchip Technology Inc.

1.0 ELECTRICAL CHARACTERISTICS

Absolute Maximum Ratings†

Drain-to-source Voltage ..... BV_{DSX}
Drain-to-gate Voltage ..... BV_{DGX}
Gate-to-source Voltage ..... ±20V
Operating Ambient Temperature, T_A ..... –55°C to +150°C
Storage Temperature, T_S ..... –55°C to +150°C

† Notice: Stresses above those listed under “Absolute Maximum Ratings” may cause permanent damage to the device. This is a stress rating only, and functional operation of the device at those or any other conditions above those indicated in the operational sections of this specification is not intended. Exposure to maximum rating conditions for extended periods may affect device reliability.

DC ELECTRICAL CHARACTERISTICS [1]

Electrical Specifications: Unless otherwise specified, for all specifications $T_A = T_J$ = +25°C.

Parameter	Sym.	Min.	Typ.	Max.	Unit	Conditions
Drain-to-source Breakdown Voltage	BV_{DSX}	350	—	—	V	V_{GS} = –5V, I_D = 100 µA
Gate-to-source Off Voltage	$V_{GS(OFF)}$	–1.5	—	–3.5	V	V_{DS} = 15V, I_D = 10 µA
Change in $V_{GS(OFF)}$ with Temperature	$\Delta V_{GS(OFF)}$	—	—	–4.5	mV/°C	V_{DS} = 15V, I_D = 10 µA (**Note 2**)
Gate Body Leakage Current	I_{GSS}	—	—	100	nA	V_{GS} = ±20V, V_{DS} = 0V
Drain-to-source Leakage Current	$I_{D(OFF)}$	—	—	1	µA	V_{DS} = Max rating, V_{GS} = –5V
		—	—	1	mA	V_{DS} = 0.8 Max Rating, V_{GS} = –5V, T_A = 125°C (**Note 2**)
Saturated Drain-to-source Current	I_{DSS}	180	—	—	mA	V_{GS} = 0V, V_{DS} = 15V
Static Drain-to-source On-state Resistance	$R_{DS(ON)}$	—	—	35	Ω	V_{GS} = 0V, I_D = 150 mA
Change in $R_{DS(ON)}$ with Temperature	$\Delta R_{DS(ON)}$	—	—	1.1	%/°C	V_{GS} = 0V, I_D = 150 mA (**Note 2**)

Note 1: All DC parameters are 100% tested at 25°C unless otherwise stated. Pulse test: 300 µs pulse, 2% duty cycle.

2: Specification is obtained by characterization and is not 100% tested.

© 2017 Microchip Technology Inc.

AC ELECTRICAL CHARACTERISTICS [2]

Electrical Specifications: Unless otherwise specified, for all specifications $T_A = T_J$ = +25°C.						
Parameter	**Sym.**	**Min.**	**Typ.**	**Max.**	**Unit**	**Conditions**
Forward Transconductance	G_{FS}	140	—	—	mmho	V_{DS} = 10V, I_D = 100 mA
Input Capacitance	C_{ISS}	—	60	120	pF	V_{GS} = –5V, V_{DS} = 25V, f = 1 MHz
Common Source Output Capacitance	C_{OSS}	—	6	15		
Reverse Transfer Capacitance	C_{RSS}	—	3	10		
Turn-on Delay Time	$t_{d(ON)}$	—	—	10	ns	V_{DD} = 25V, I_D = 150 mA, R_{GEN} = 25Ω, V_{GS} = 0V to –10V
Rise Time	t_r	—	—	15		
Turn-off Delay Time	$t_{d(OFF)}$	—	—	15		
Fall Time	t_f	—	—	20		
DIODE PARAMETER						
Diode Forward Voltage Drop	V_{SD}	—	—	1.8	V	V_{GS} = –5V, I_{SD} = 150 mA (**Note 1**)
Reverse Recovery Time	t_{rr}	—	800	—	ns	V_{GS} = –5V, I_{SD} = 150 mA (**Note 2**)

Note 1: All DC parameters are 100% tested at 25°C unless otherwise stated. Pulse test: 300 µs pulse, 2% duty cycle.

2: Specification is obtained by characterization and is not 100% tested.

TEMPERATURE SPECIFICATIONS

Parameter	**Sym.**	**Min.**	**Typ.**	**Max.**	**Unit**	**Conditions**
TEMPERATURE RANGE						
Operating Ambient Temperature	T_A	–55	—	+150	°C	
Storage Temperature	T_S	–55	—	+150	°C	
PACKAGE THERMAL RESISTANCE						
SOT-23	θ_{JA}	—	203	—	°C/W	
SOT-89	θ_{JA}	—	133	—	°C/W	

THERMAL CHARACTERISTICS

Package	**I_D [1] (Continuous) (mA)**	**I_D (Pulsed) (mA)**	**Power Dissipation at T_A = 25°C (W)**	**I_{DR} [1] (mA)**	**I_{DRM} (mA)**
SOT-23	72	300	0.36	72	300
SOT-89	135	300	1.3 [2]	135	300

Note 1: I_D (continuous) is limited by maximum T_J.

2: Mounted on FR4 board, 25 mm x 25 mm x 1.57 mm

© 2017 Microchip Technology Inc.

2.0 PIN DESCRIPTION

Table 2-1 shows the description of pins in DN3135 SOT-23 and SOT-89. Refer to **Package Types** for the location of pins.

TABLE 2-1: PIN FUNCTION TABLE

SOT-23 Pin Number	SOT-89 Pin Number	Pin Name	Description
1	1	Gate	Gate
2	3	Source	Source
3	2, 4	Drain	Drain

© 2017 Microchip Technology Inc.

3.0 FUNCTIONAL DESCRIPTION

Figure 3-1 illustrates the switching waveforms and test circuit for DN3135.

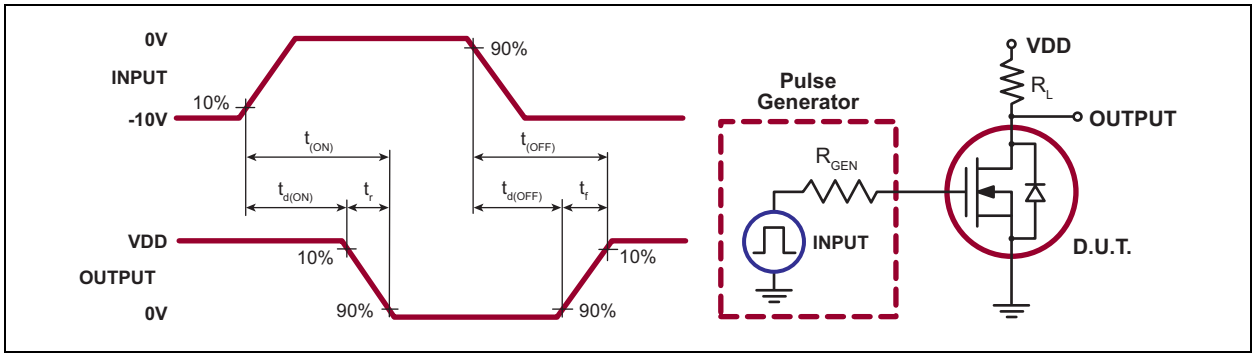

FIGURE 3-1: *Switching Waveforms and Test Circuit.*

PRODUCT SUMMARY

BV_{DSX}/BV_{DGX} (V)	$R_{DS(ON)}$ (Maximum) (Ω)	I_{DSS} (Minimum) (mA)
350	35	180

4.0 PACKAGING INFORMATION

4.1 Package Marking Information

3-lead SOT-23 Example

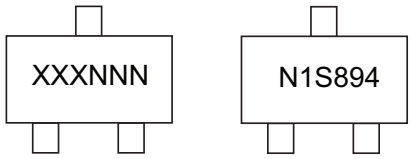

3-lead SOT-89 Example

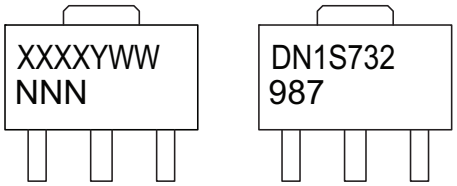

Legend:	XX...X	Product Code or Customer-specific information
	Y	Year code (last digit of calendar year)
	YY	Year code (last 2 digits of calendar year)
	WW	Week code (week of January 1 is week ‘01’)
	NNN	Alphanumeric traceability code
	(e3)	Pb-free JEDEC® designator for Matte Tin (Sn)
	*	This package is Pb-free. The Pb-free JEDEC designator ((e3)) can be found on the outer packaging for this package.

Note: In the event the full Microchip part number cannot be marked on one line, it will be carried over to the next line, thus limiting the number of available characters for product code or customer-specific information. Package may or not include the corporate logo.

© 2017 Microchip Technology Inc.

3-Lead TO-236AB (SOT-23) Package Outline (K1/T)

2.90x1.30mm body, 1.12mm height (max), 1.90mm pitch

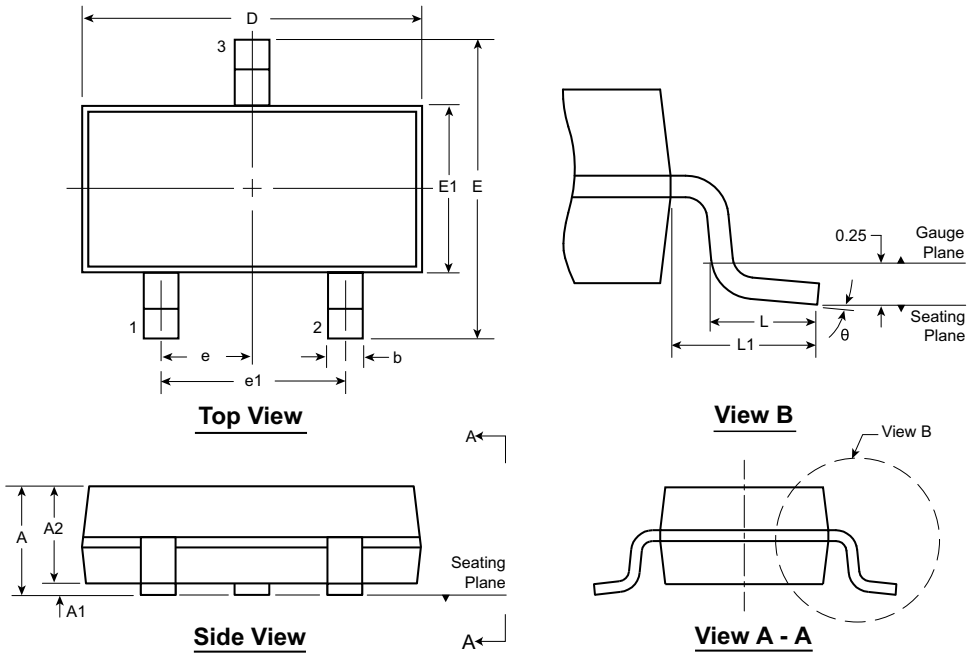

Note: For the most current package drawings, see the Microchip Packaging Specification at www.microchip.com/packaging.

Symbol		A	A1	A2	b	D	E	E1	e	e1	L	L1	θ
Dimension (mm)	MIN	0.89	0.01	0.88	0.30	2.80	2.10	1.20	0.95 BSC	1.90 BSC	0.20†	0.54 REF	0°
	NOM	-	-	0.95	-	2.90	-	1.30			0.50		-
	MAX	1.12	0.10	1.02	0.50	3.04	2.64	1.40			0.60		8°

JEDEC Registration TO-236, Variation AB, Issue H, Jan. 1999.
† This dimension differs from the JEDEC drawing.
Drawings not to scale.

3-Lead TO-243AA (SOT-89) Package Outline (N8)

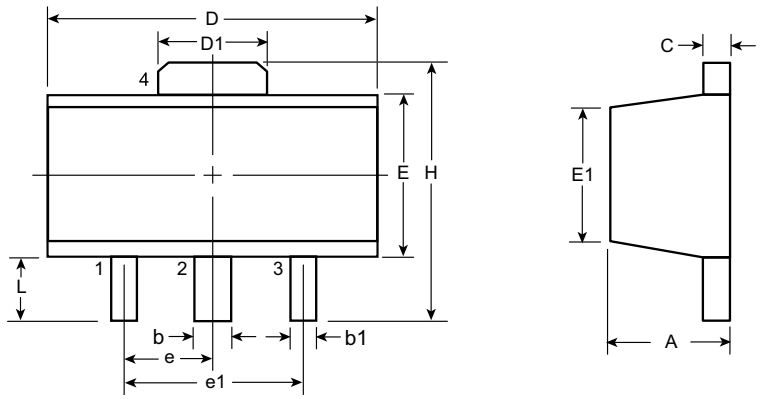

Top View **Side View**

Note: For the most current package drawings, see the Microchip Packaging Specification at www.microchip.com/packaging.

Symbol		A	b	b1	C	D	D1	E	E1	e	e1	H	L
Dimensions (mm)	MIN	1.40	0.44	0.36	0.35	4.40	1.62	2.29	2.00†	1.50 BSC	3.00 BSC	3.94	0.73†
	NOM	-	-	-	-	-	-	-	-			-	-
	MAX	1.60	0.56	0.48	0.44	4.60	1.83	2.60	2.29			4.25	1.20

JEDEC Registration TO-243, Variation AA, Issue C, July 1986.
† This dimension differs from the JEDEC drawing
***Drawings not to scale**.*

© 2017 Microchip Technology Inc.

APPENDIX A: REVISION HISTORY

Revision A (April 2017)

- Converted Supertex Doc# DSFP-DN3135 to Microchip DS20005703A
- Changed the packaging format
- Made minor text changes throughout the document

PRODUCT IDENTIFICATION SYSTEM

To order or obtain information, e.g., on pricing or delivery, contact your local Microchip representative or sales office.

PART NO.	XX	-	X	-	X
Device	Package Options		Environmental		Media Type

Device:	DN3135	=	N-Channel Depletion-Mode Vertical DMOS FET
Packages:	K1	=	3-lead SOT-23
	N8	=	3-lead SOT-89
Environmental:	G	=	Lead (Pb)-free/RoHS-compliant Package
Media Type:	(blank)	=	3000/Reel for a K1 Package 2000/Reel for an N8 Package

Examples:

a) DN3135K1-G: N-Channel Depletion-Mode Vertical DMOS FET, 3-lead SOT-23, 3000/Reel

b) DN3135N8-G: N-Channel Depletion-Mode Vertical DMOS FET, 3-lead SOT-89, 2000/Reel

© 2017 Microchip Technology Inc.

Note the following details of the code protection feature on Microchip devices:

- Microchip products meet the specification contained in their particular Microchip Data Sheet.
- Microchip believes that its family of products is one of the most secure families of its kind on the market today, when used in the intended manner and under normal conditions.
- There are dishonest and possibly illegal methods used to breach the code protection feature. All of these methods, to our knowledge, require using the Microchip products in a manner outside the operating specifications contained in Microchip's Data Sheets. Most likely, the person doing so is engaged in theft of intellectual property.
- Microchip is willing to work with the customer who is concerned about the integrity of their code.
- Neither Microchip nor any other semiconductor manufacturer can guarantee the security of their code. Code protection does not mean that we are guaranteeing the product as "unbreakable."

Code protection is constantly evolving. We at Microchip are committed to continuously improving the code protection features of our products. Attempts to break Microchip's code protection feature may be a violation of the Digital Millennium Copyright Act. If such acts allow unauthorized access to your software or other copyrighted work, you may have a right to sue for relief under that Act.

Information contained in this publication regarding device applications and the like is provided only for your convenience and may be superseded by updates. It is your responsibility to ensure that your application meets with your specifications. MICROCHIP MAKES NO REPRESENTATIONS OR WARRANTIES OF ANY KIND WHETHER EXPRESS OR IMPLIED, WRITTEN OR ORAL, STATUTORY OR OTHERWISE, RELATED TO THE INFORMATION, INCLUDING BUT NOT LIMITED TO ITS CONDITION, QUALITY, PERFORMANCE, MERCHANTABILITY OR FITNESS FOR PURPOSE**.** Microchip disclaims all liability arising from this information and its use. Use of Microchip devices in life support and/or safety applications is entirely at the buyer's risk, and the buyer agrees to defend, indemnify and hold harmless Microchip from any and all damages, claims, suits, or expenses resulting from such use. No licenses are conveyed, implicitly or otherwise, under any Microchip intellectual property rights unless otherwise stated.

Microchip received ISO/TS-16949:2009 certification for its worldwide headquarters, design and wafer fabrication facilities in Chandler and Tempe, Arizona; Gresham, Oregon and design centers in California and India. The Company's quality system processes and procedures are for its PIC® MCUs and dsPIC® DSCs, KEELOQ® code hopping devices, Serial EEPROMs, microperipherals, nonvolatile memory and analog products. In addition, Microchip's quality system for the design and manufacture of development systems is ISO 9001:2000 certified.

QUALITY MANAGEMENT SYSTEM
CERTIFIED BY DNV
═ ISO/TS 16949 ═

Trademarks

The Microchip name and logo, the Microchip logo, AnyRate, AVR, AVR logo, AVR Freaks, BeaconThings, BitCloud, CryptoMemory, CryptoRF, dsPIC, FlashFlex, flexPWR, Heldo, JukeBlox, KEELOQ, KEELOQ logo, Kleer, LANCheck, LINK MD, maXStylus, maXTouch, MediaLB, megaAVR, MOST, MOST logo, MPLAB, OptoLyzer, PIC, picoPower, PICSTART, PIC32 logo, Prochip Designer, QTouch, RightTouch, SAM-BA, SpyNIC, SST, SST Logo, SuperFlash, tinyAVR, UNI/O, and XMEGA are registered trademarks of Microchip Technology Incorporated in the U.S.A. and other countries.

ClockWorks, The Embedded Control Solutions Company, EtherSynch, Hyper Speed Control, HyperLight Load, IntelliMOS, mTouch, Precision Edge, and Quiet-Wire are registered trademarks of Microchip Technology Incorporated in the U.S.A.

Adjacent Key Suppression, AKS, Analog-for-the-Digital Age, Any Capacitor, AnyIn, AnyOut, BodyCom, chipKIT, chipKIT logo, CodeGuard, CryptoAuthentication, CryptoCompanion, CryptoController, dsPICDEM, dsPICDEM.net, Dynamic Average Matching, DAM, ECAN, EtherGREEN, In-Circuit Serial Programming, ICSP, Inter-Chip Connectivity, JitterBlocker, KleerNet, KleerNet logo, Mindi, MiWi, motorBench, MPASM, MPF, MPLAB Certified logo, MPLIB, MPLINK, MultiTRAK, NetDetach, Omniscient Code Generation, PICDEM, PICDEM.net, PICkit, PICtail, PureSilicon, QMatrix, RightTouch logo, REAL ICE, Ripple Blocker, SAM-ICE, Serial Quad I/O, SMART-I.S., SQI, SuperSwitcher, SuperSwitcher II, Total Endurance, TSHARC, USBCheck, VariSense, ViewSpan, WiperLock, Wireless DNA, and ZENA are trademarks of Microchip Technology Incorporated in the U.S.A. and other countries.

SQTP is a service mark of Microchip Technology Incorporated in the U.S.A.

Silicon Storage Technology is a registered trademark of Microchip Technology Inc. in other countries.

GestIC is a registered trademark of Microchip Technology Germany II GmbH & Co. KG, a subsidiary of Microchip Technology Inc., in other countries.

All other trademarks mentioned herein are property of their respective companies.

© 2017, Microchip Technology Incorporated, All Rights Reserved.

ISBN: 978-1-5224-1568-8

Worldwide Sales and Service

AMERICAS

Corporate Office
2355 West Chandler Blvd.
Chandler, AZ 85224-6199
Tel: 480-792-7200
Fax: 480-792-7277
Technical Support:
http://www.microchip.com/support
Web Address:
www.microchip.com

Atlanta
Duluth, GA
Tel: 678-957-9614
Fax: 678-957-1455

Austin, TX
Tel: 512-257-3370

Boston
Westborough, MA
Tel: 774-760-0087
Fax: 774-760-0088

Chicago
Itasca, IL
Tel: 630-285-0071
Fax: 630-285-0075

Dallas
Addison, TX
Tel: 972-818-7423
Fax: 972-818-2924

Detroit
Novi, MI
Tel: 248-848-4000

Houston, TX
Tel: 281-894-5983

Indianapolis
Noblesville, IN
Tel: 317-773-8323
Fax: 317-773-5453
Tel: 317-536-2380

Los Angeles
Mission Viejo, CA
Tel: 949-462-9523
Fax: 949-462-9608
Tel: 951-273-7800

Raleigh, NC
Tel: 919-844-7510

New York, NY
Tel: 631-435-6000

San Jose, CA
Tel: 408-735-9110
Tel: 408-436-4270

Canada - Toronto
Tel: 905-695-1980
Fax: 905-695-2078

ASIA/PACIFIC

Asia Pacific Office
Suites 3707-14, 37th Floor
Tower 6, The Gateway
Harbour City, Kowloon

Hong Kong
Tel: 852-2943-5100
Fax: 852-2401-3431

Australia - Sydney
Tel: 61-2-9868-6733
Fax: 61-2-9868-6755

China - Beijing
Tel: 86-10-8569-7000
Fax: 86-10-8528-2104

China - Chengdu
Tel: 86-28-8665-5511
Fax: 86-28-8665-7889

China - Chongqing
Tel: 86-23-8980-9588
Fax: 86-23-8980-9500

China - Dongguan
Tel: 86-769-8702-9880

China - Guangzhou
Tel: 86-20-8755-8029

China - Hangzhou
Tel: 86-571-8792-8115
Fax: 86-571-8792-8116

China - Hong Kong SAR
Tel: 852-2943-5100
Fax: 852-2401-3431

China - Nanjing
Tel: 86-25-8473-2460
Fax: 86-25-8473-2470

China - Qingdao
Tel: 86-532-8502-7355
Fax: 86-532-8502-7205

China - Shanghai
Tel: 86-21-3326-8000
Fax: 86-21-3326-8021

China - Shenyang
Tel: 86-24-2334-2829
Fax: 86-24-2334-2393

China - Shenzhen
Tel: 86-755-8864-2200
Fax: 86-755-8203-1760

China - Wuhan
Tel: 86-27-5980-5300
Fax: 86-27-5980-5118

China - Xian
Tel: 86-29-8833-7252
Fax: 86-29-8833-7256

ASIA/PACIFIC

China - Xiamen
Tel: 86-592-2388138
Fax: 86-592-2388130

China - Zhuhai
Tel: 86-756-3210040
Fax: 86-756-3210049

India - Bangalore
Tel: 91-80-3090-4444
Fax: 91-80-3090-4123

India - New Delhi
Tel: 91-11-4160-8631
Fax: 91-11-4160-8632

India - Pune
Tel: 91-20-3019-1500

Japan - Osaka
Tel: 81-6-6152-7160
Fax: 81-6-6152-9310

Japan - Tokyo
Tel: 81-3-6880- 3770
Fax: 81-3-6880-3771

Korea - Daegu
Tel: 82-53-744-4301
Fax: 82-53-744-4302

Korea - Seoul
Tel: 82-2-554-7200
Fax: 82-2-558-5932 or
82-2-558-5934

Malaysia - Kuala Lumpur
Tel: 60-3-6201-9857
Fax: 60-3-6201-9859

Malaysia - Penang
Tel: 60-4-227-8870
Fax: 60-4-227-4068

Philippines - Manila
Tel: 63-2-634-9065
Fax: 63-2-634-9069

Singapore
Tel: 65-6334-8870
Fax: 65-6334-8850

Taiwan - Hsin Chu
Tel: 886-3-5778-366
Fax: 886-3-5770-955

Taiwan - Kaohsiung
Tel: 886-7-213-7830

Taiwan - Taipei
Tel: 886-2-2508-8600
Fax: 886-2-2508-0102

Thailand - Bangkok
Tel: 66-2-694-1351
Fax: 66-2-694-1350

EUROPE

Austria - Wels
Tel: 43-7242-2244-39
Fax: 43-7242-2244-393

Denmark - Copenhagen
Tel: 45-4450-2828
Fax: 45-4485-2829

Finland - Espoo
Tel: 358-9-4520-820

France - Paris
Tel: 33-1-69-53-63-20
Fax: 33-1-69-30-90-79

France - Saint Cloud
Tel: 33-1-30-60-70-00

Germany - Garching
Tel: 49-8931-9700

Germany - Haan
Tel: 49-2129-3766400

Germany - Heilbronn
Tel: 49-7131-67-3636

Germany - Karlsruhe
Tel: 49-721-625370

Germany - Munich
Tel: 49-89-627-144-0
Fax: 49-89-627-144-44

Germany - Rosenheim
Tel: 49-8031-354-560

Israel - Ra'anana
Tel: 972-9-744-7705

Italy - Milan
Tel: 39-0331-742611
Fax: 39-0331-466781

Italy - Padova
Tel: 39-049-7625286

Netherlands - Drunen
Tel: 31-416-690399
Fax: 31-416-690340

Norway - Trondheim
Tel: 47-7289-7561

Poland - Warsaw
Tel: 48-22-3325737

Romania - Bucharest
Tel: 40-21-407-87-50

Spain - Madrid
Tel: 34-91-708-08-90
Fax: 34-91-708-08-91

Sweden - Gothenberg
Tel: 46-31-704-60-40

Sweden - Stockholm
Tel: 46-8-5090-4654

UK - Wokingham
Tel: 44-118-921-5800
Fax: 44-118-921-5820

© 2017 Microchip Technology Inc.

ENTEGRECİ

Bu belge www.entegreci.com üzerinden sunulmaktadır.

Elektronik komponent tedarikinde Entegreci

Entegreci, Eskişehir merkezli, Türkiye geneline satış yapan bir elektronik komponent mağazasıdır. Entegreler (IC), mikrodenetleyiciler, transistörler, diyotlar, pasif elemanlar, konnektörler, modüller ve geliştirme kartları tek adetten seri üretim adetlerine kadar satılır. Ürün sayfalarında güncel stok durumunu, fiyatı ve datasheet bağlantısını bulabilirsiniz.

Parça koduyla arama

Üretici parça numarasını yazın; stok ve fiyatı hemen görün.

www.entegreci.com

Ürün kategorileri

Entegreden kapasitöre tüm elektronik komponent kategorileri.

Kategorilere göz atın

Üreticiler

Aradığınız üreticinin ürünlerini tek sayfada inceleyin.

Üreticileri görün

Toplu alım ve teklif

Listede olmayan ya da yüksek adetli parçalar için teklif isteyin.

Teklif isteyin

www.entegreci.com | **destek@entegreci.com** | **0850 305 90 34**

Entegreci is an online electronic components store based in Türkiye. Search by manufacturer part number to see stock, prices and datasheets for integrated circuits, microcontrollers, transistors, passive components and connectors, or request a quote for parts that are not listed.

Bu sayfa Entegreci tarafından eklenmiştir. Belgenin önceki sayfaları asıl yayıncısına aittir ve içeriği değiştirilmemiştir; en güncel sürüm için belgenin yayıncısına başvurun.