1.2A, 600V N-CHANNEL POWER MOSFET

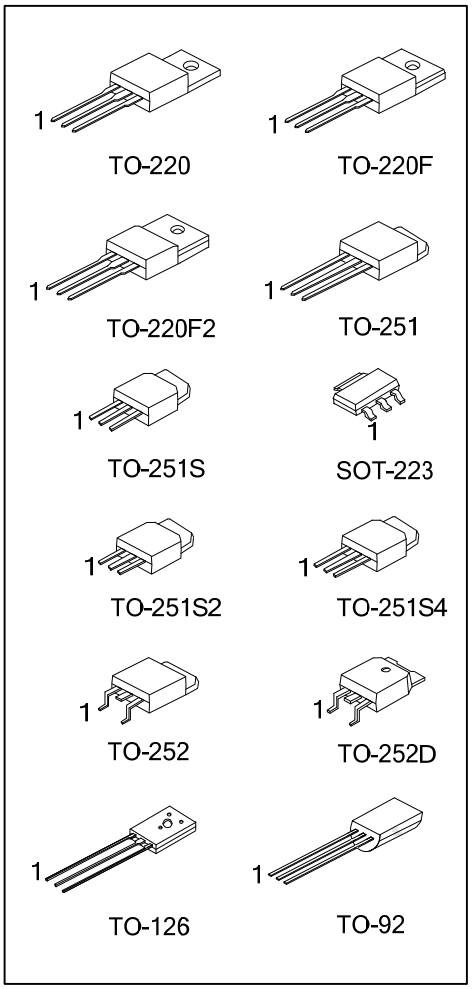

■ DESCRIPTION

The UTC **1N60** is a high voltage MOSFET and is designed to have better characteristics, such as fast switching time, low gate charge, low on-state resistance and have a high rugged avalanche characteristics. This power MOSFET is usually used at high speed switching applications in power supplies, PWM motor controls, high efficient DC to DC converters and bridge circuits.

■ FEATURES

* $R_{DS(ON)}$ <11.5Ω@ V_{GS}=10V, I_D=0.6A
* Ultra Low gate charge (typical 5.0nC)
* Low reverse transfer capacitance (C_{RSS} = typical 3.0 pF)
* Fast switching capability
* Avalanche energy specified
* Improved dv/dt capability, high ruggedness

■ SYMBOL

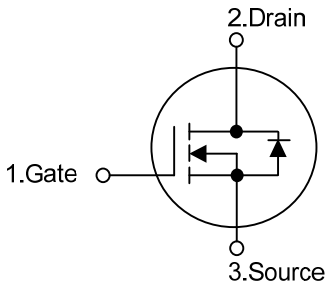

Copyright © 2017 Unisonic Technologies Co., Ltd

■ ORDERING INFORMATION

Ordering Number		Package	Pin Assignment			Packing
Lead Free	Halogen Free		1	2	3	
1N60L-AA3-R	1N60G-AA3-R	SOT-223	G	D	S	Tape Reel
1N60L-TA3-T	1N60G-TA3-T	TO-220	G	D	S	Tube
1N60L-TF2-T	1N60G-TF2-T	TO-220F2	G	D	S	Tube
1N60L-TF3-T	1N60G-TF3-T	TO-220F	G	D	S	Tube
1N60L-TM3-T	1N60G-TM3-T	TO-251	G	D	S	Tube
1N60L-TMS-T	1N60G-TMS-T	TO-251S	G	D	S	Tube
1N60L-TMS2-T	1N60G-TMS2-T	TO-251S2	G	D	S	Tube
1N60L-TMS4-T	1N60G-TMS4-T	TO-251S4	G	D	S	Tube
1N60L-TN3-R	1N60G-TN3-R	TO-252	G	D	S	Tape Reel
1N60L-TND-R	1N60G-TND-R	TO-252D	G	D	S	Tape Reel
1N60L-T60-K	1N60G-T60-K	TO-126	G	D	S	Bulk
1N60L-T92-B	1N60G-T92-B	TO-92	G	D	S	Tape Box
1N60L-T92-K	1N60G-T92-K	TO-92	G	D	S	Bulk

Note: Pin Assignment: G: Gate D: Drain S: Source

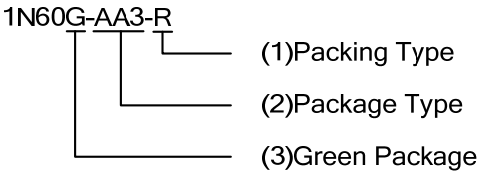

(1) B: Tape Box, K: Bulk, T: Tube, R: Tape Reel
(2) AA3: SOT-223, T92: TO-92, TA3: TO-220, TF2: TO-220F2, TF3: TO-220F, TM3: TO-251, TMS: TO-251S, TMS2: TO-251S2, TMS4: TO-251S4, TN3: TO-252, TND: TO-252D, T60: TO-126
(3) L: Lead Free, G: Halogen Free and Lead Free

■ MARKING

PACKAGE		MARKING
SOT-223		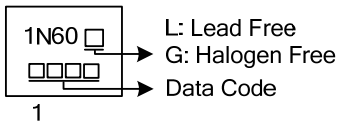
TO-220 TO-220F TO-220F2 TO-251 TO-251S	TO-251S2 TO-251S4 TO-252 TO-252D	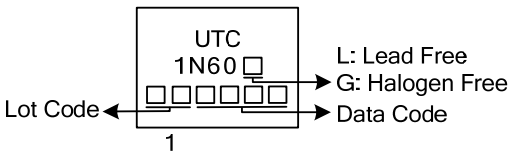
TO-126		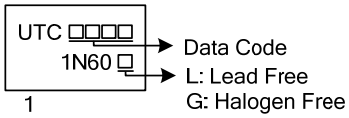
TO-92		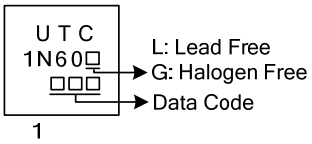

■ ABSOLUTE MAXIMUM RATINGS (T_C = 25°C, unless otherwise specified)

PARAMETER		SYMBOL	RATINGS	UNIT
Drain-Source Voltage		V_{DSS}	600	V
Gate-Source Voltage		V_{GSS}	±30	V
Avalanche Current (Note 2)		I_{AR}	1.2	A
Continuous Drain Current		I_D	1.2	A
Pulsed Drain Current (Note 2)		I_{DM}	4.8	A
Avalanche Energy	Single Pulsed (Note 3)	E_{AS}	50	mJ
	Repetitive (Note 2)	E_{AR}	4.0	mJ
Peak Diode Recovery dv/dt (Note 4)		dv/dt	4.5	V/ns
Power Dissipation	SOT-223	P_D	8	W
	TO-251/TO-252 TO-252D/TO-251S TO-251S2/ TO-251S4		28	
	TO-220		40	
	TO-220F		21	
	TO-220F2		23	
	TO-92(T_A=25°C)		1	
	TO-126		12.5	
Junction Temperature		T_J	+150	°C
Operating Temperature		T_{OPR}	-55 ~ +150	°C
Storage Temperature		T_{STG}	-55 ~ +150	°C

Notes: 1. Absolute maximum ratings are those values beyond which the device could be permanently damaged. Absolute maximum ratings are stress ratings only and functional device operation is not implied.
2. Repetitive Rating: Pulse width limited by maximum junction temperature
3. L = 60mH, I_{AS} = 1A, V_{DD} = 50V, R_G = 25Ω, Starting T_J = 25°C
4. I_{SD} ≤ 1.2A, di/dt ≤ 200A/μs, V_{DD} ≤ BV_{DSS}, Starting T_J = 25°C

■ THERMAL DATA

PARAMETER		SYMBOL	RATINGS	UNIT
Junction to Ambient	SOT-223	θ_{JA}	150	°C/W
	TO-251/TO-252 TO-252D/TO-251S TO-251S2/ TO-251S4		110	
	TO-220/TO-220F		62.5	
	TO-220F2		62.5	
	TO-92		140	
	TO-126		132	
Junction to Case	SOT-223	θ_{Jc}	14	°C/W
	TO-251/TO-252 TO-252D/TO-251S TO-251S2/ TO-251S4		4.53	
	TO-220		3.13	
	TO-220F		5.95	
	TO-220F2		5.43	
	TO-92		80	
	TO-126		10	

■ ELECTRICAL CHARACTERISTICS (T_C=25℃, unless otherwise specified.)

PARAMETER		SYMBOL	TEST CONDITIONS	MIN	TYP	MAX	UNIT
OFF CHARACTERISTICS							
Drain-Source Breakdown Voltage		BV_{DSS}	V_{GS}=0V, I_D=250μA	600			V
Drain-Source Leakage Current		I_{DSS}	V_{DS}=600V, V_{GS}=0V			10	μA
Gate-Source Leakage Current	Forward	I_{GSS}	V_{GS}=30V, V_{DS}=0V			100	nA
	Reverse		V_{GS}=-30V, V_{DS}=0V			-100	nA
Breakdown Voltage Temperature Coefficient		$\triangle BV_{DSS}/\triangle T_J$	I_D=250μA		0.4		V/℃
ON CHARACTERISTICS							
Gate Threshold Voltage		$V_{GS(TH)}$	V_{DS}=V_{GS}, I_D=250μA	2.0		4.0	V
Static Drain-Source On-State Resistance		$R_{DS(ON)}$	V_{GS}=10V, I_D=0.6A		9.3	11.5	Ω
DYNAMIC CHARACTERISTICS							
Input Capacitance		C_{ISS}	V_{DS}=25V, V_{GS}=0V, f=1MHz		120	150	pF
Output Capacitance		C_{OSS}			20	25	pF
Reverse Transfer Capacitance		C_{RSS}			3.0	4.0	pF
SWITCHING CHARACTERISTICS							
Total Gate Charge		Q_G	V_{DS}=480V, V_{GS}=10V, I_D=1.2A (Note 2,3)		5.0	6.0	nC
Gate-Source Charge		Q_{GS}			1.0		nC
Gate-Drain Charge		Q_{GD}			2.6		nC
Turn-On Delay Time		$t_{D(ON)}$	V_{DD}=300V, I_D=1.2A, R_G=50Ω (Note 2,3)		5	20	ns
Turn-On Rise Time		t_R			25	60	ns
Turn-Off Delay Time		$t_{D(OFF)}$			7	25	ns
Turn-Off Fall Time		t_F			25	60	ns
SOURCE-DRAIN DIODE RATINGS AND CHARACTERISTICS							
Drain-Source Diode Forward Voltage		V_{SD}	V_{GS}=0V, I_S =1.2A			1.4	V
Maximum Continuous Drain-Source Diode Forward Current		I_S				1.2	A
Maximum Pulsed Drain-Source Diode Forward Current		I_{SM}				4.8	A
Reverse Recovery Time		t_{rr}	V_{GS}=0V, I_S=1.2A dI_F/dt=100A/μs (Note 1)		160		ns
Reverse Recovery Charge		Q_{rr}			0.3		μC

Notes: 1. Repetitive Rating: Pulse width limited by maximum junction temperature
2. Pulse Test: Pulse Width ≤300μs, Duty Cycle≤2%
3. Essentially Independent of Operating Temperature

■ TEST CIRCUITS AND WAVEFORMS

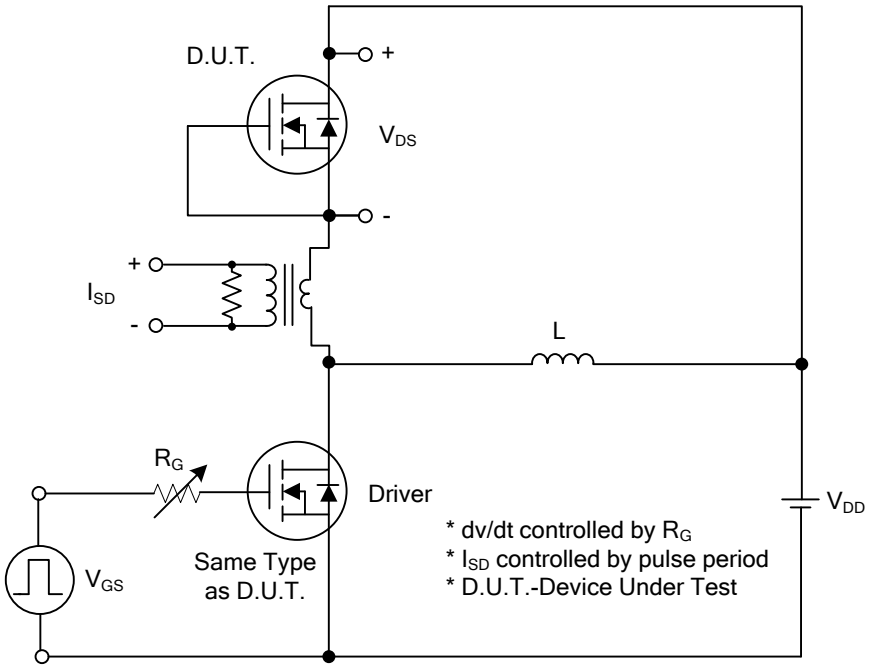

Peak Diode Recovery dv/dt Test Circuit

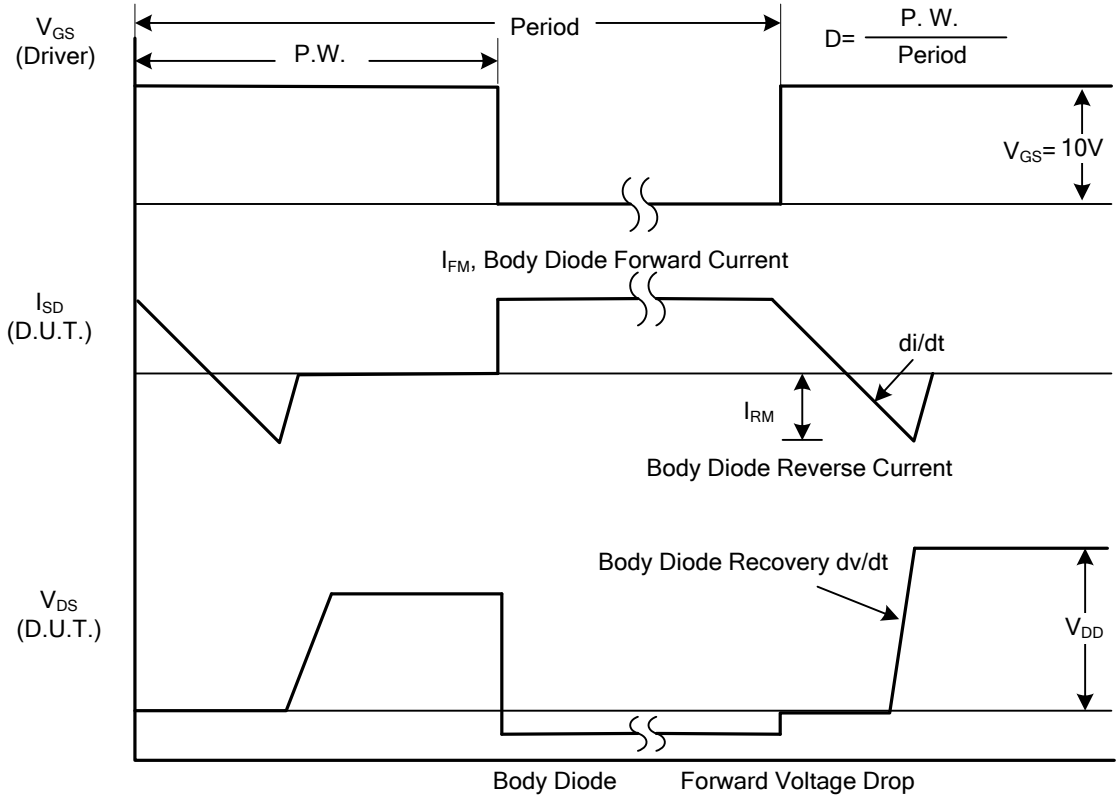

Peak Diode Recovery dv/dt Waveforms

■ TEST CIRCUITS AND WAVEFORMS (Cont.)

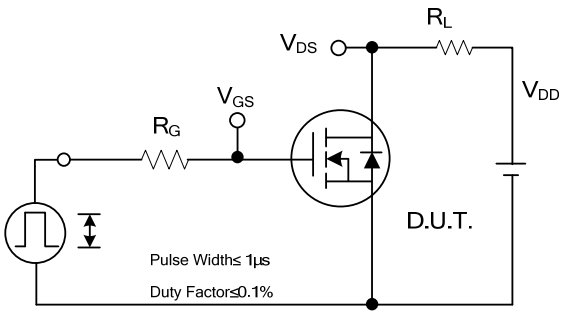

Switching Test Circuit

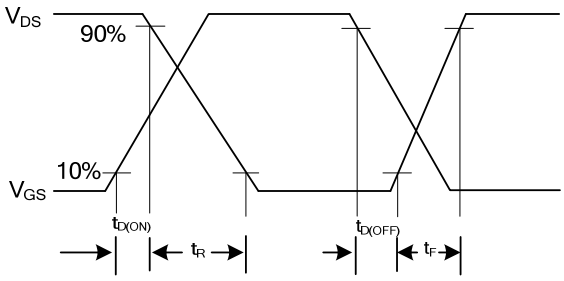

Switching Waveforms

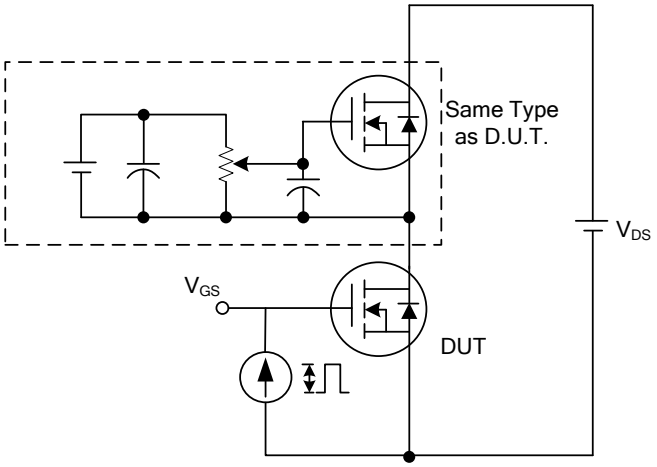

Gate Charge Test Circuit

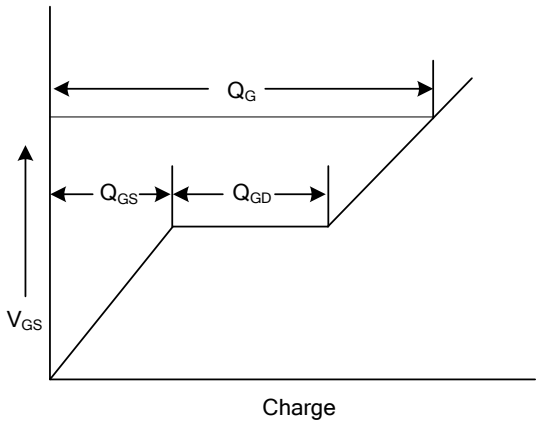

Gate Charge Waveform

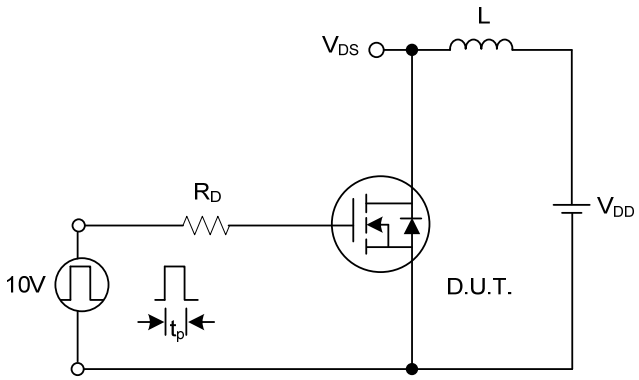

Unclamped Inductive Switching Test Circuit

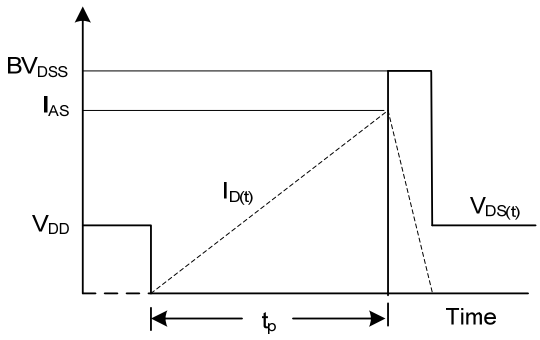

Unclamped Inductive Switching Waveforms

■ TYPICAL CHARACTERISTICS

Drain Current vs.
Source to Drain Voltage

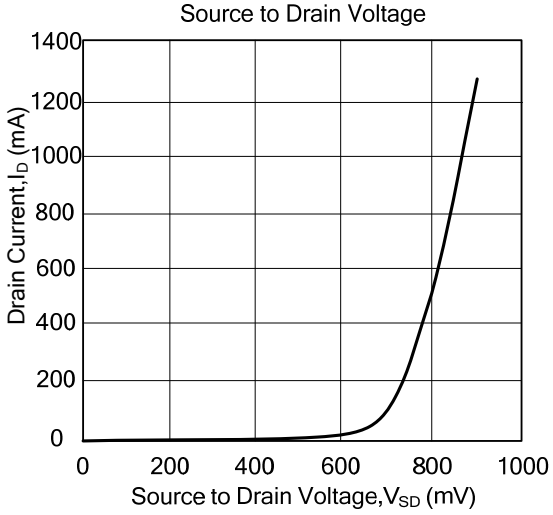

Drain-Source On-State
Resistance Characteristics

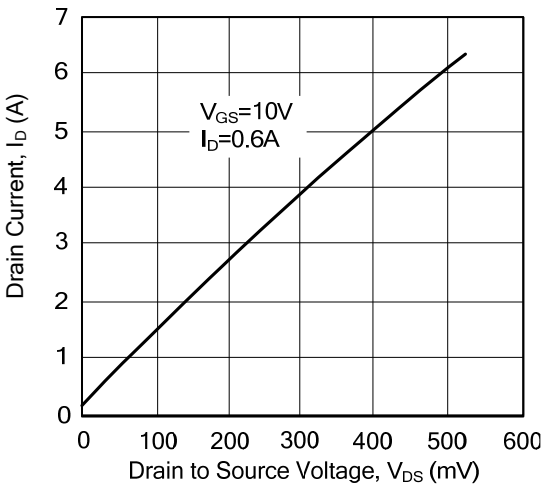

Drain Current vs.
Gate Threshold Voltage

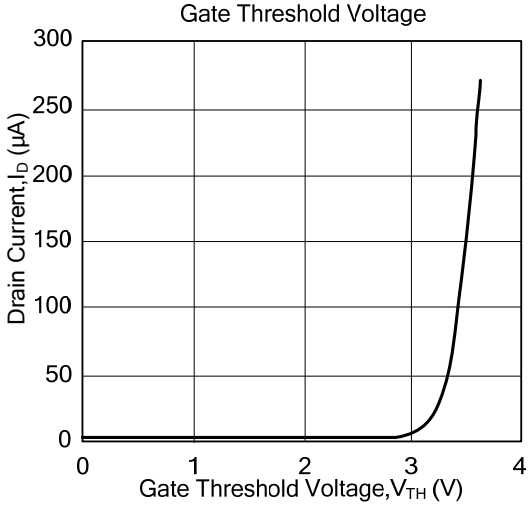

Drain Current vs.
Drain-Source Breakdown Voltage

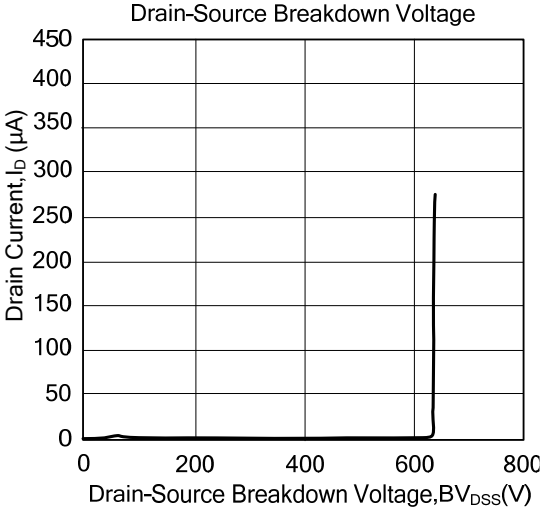

Capacitance Characteristics
(Non-Repetitive)

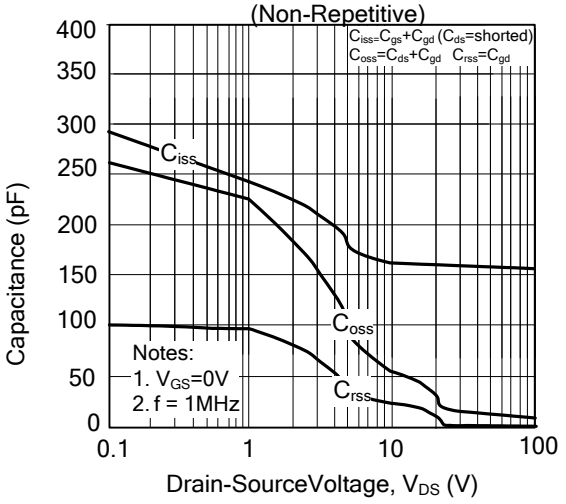

Gate Charge Characteristics

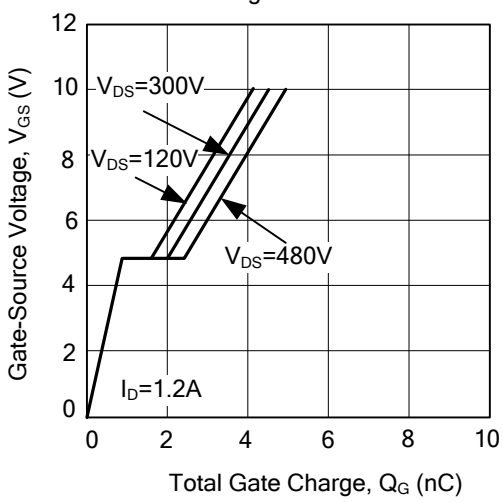

■ TYPICAL CHARACTERISTICS (Cont.)

Breakdown Voltage Variation vs. Temperature

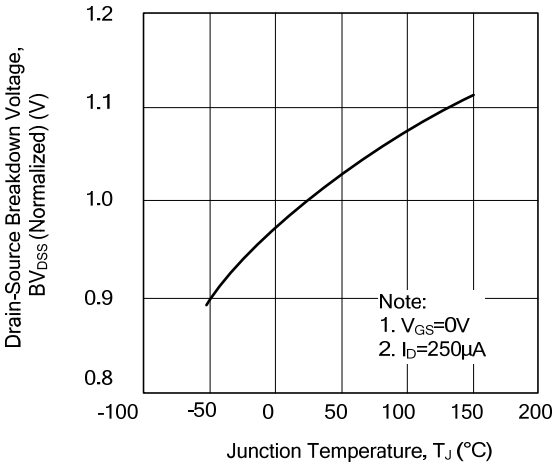

On-Resistance Junction Temperature

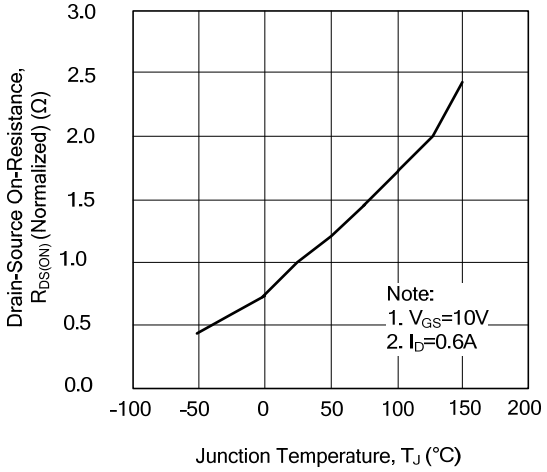

On-Resistance Variation vs. Drain Current and Gate Voltage

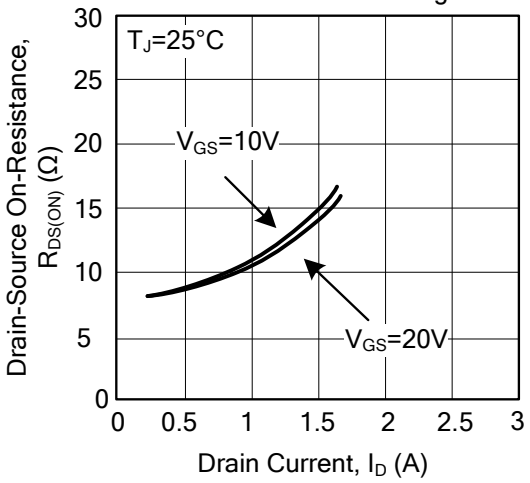

On State Current vs. Allowable Case Temperature

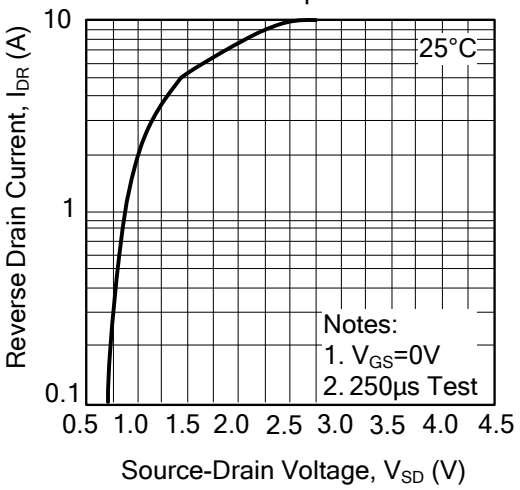

Maximum Drain Current vs. Case Temperature

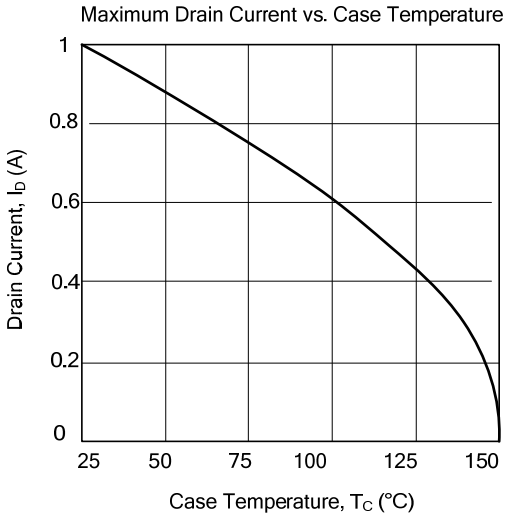

Safe Operating Area

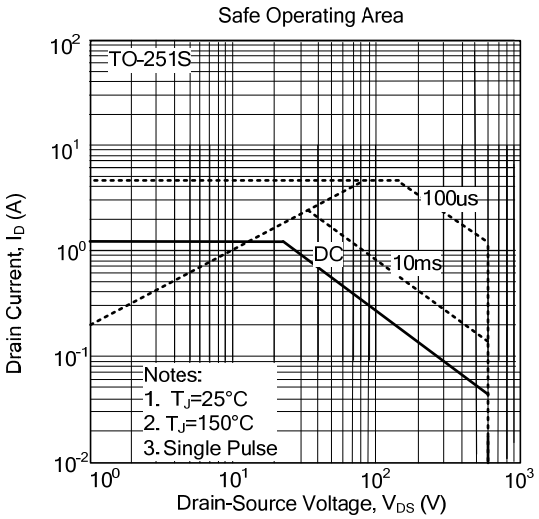

■ TYPICAL CHARACTERISTICS (Cont.)

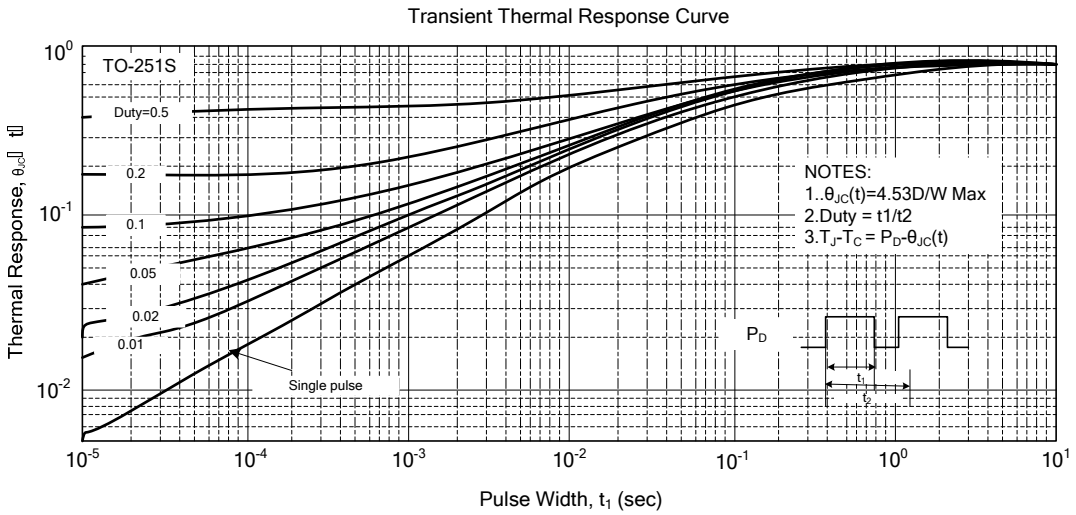

UTC assumes no responsibility for equipment failures that result from using products at values that exceed, even momentarily, rated values (such as maximum ratings, operating condition ranges, or other parameters) listed in products specifications of any and all UTC products described or contained herein. UTC products are not designed for use in life support appliances, devices or systems where malfunction of these products can be reasonably expected to result in personal injury. Reproduction in whole or in part is prohibited without the prior written consent of the copyright owner. The information presented in this document does not form part of any quotation or contract, is believed to be accurate and reliable and may be changed without notice.

ENTEGRECİ

Bu belge www.entegreci.com üzerinden sunulmaktadır.

Elektronik komponent tedarikinde Entegreci

Entegreci, Eskişehir merkezli, Türkiye geneline satış yapan bir elektronik komponent mağazasıdır. Entegreler (IC), mikrodenetleyiciler, transistörler, diyotlar, pasif elemanlar, konnektörler, modüller ve geliştirme kartları tek adetten seri üretim adetlerine kadar satılır. Ürün sayfalarında güncel stok durumunu, fiyatı ve datasheet bağlantısını bulabilirsiniz.

Parça koduyla arama

Üretici parça numarasını yazın; stok ve fiyatı hemen görün.

www.entegreci.com

Ürün kategorileri

Entegreden kapasitöre tüm elektronik komponent kategorileri.

Kategorilere göz atın

Üreticiler

Aradığınız üreticinin ürünlerini tek sayfada inceleyin.

Üreticileri görün

Toplu alım ve teklif

Listede olmayan ya da yüksek adetli parçalar için teklif isteyin.

Teklif isteyin

www.entegreci.com | **destek@entegreci.com** | **0850 305 90 34**

Entegreci is an online electronic components store based in Türkiye. Search by manufacturer part number to see stock, prices and datasheets for integrated circuits, microcontrollers, transistors, passive components and connectors, or request a quote for parts that are not listed.

Bu sayfa Entegreci tarafından eklenmiştir. Belgenin önceki sayfaları asıl yayıncısına aittir ve içeriği değiştirilmemiştir; en güncel sürüm için belgenin yayıncısına başvurun.