19N10

Power MOSFET

15.6A, 100V N-CHANNEL POWER MOSFET

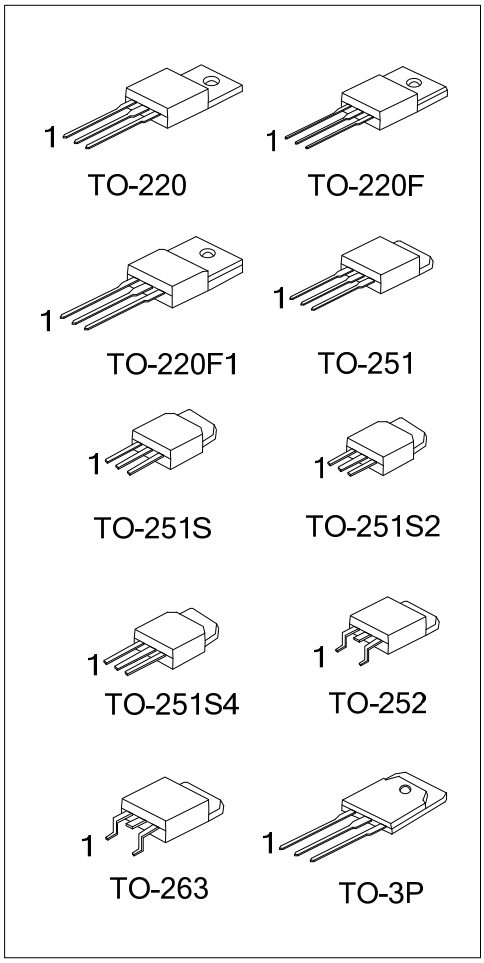

■ DESCRIPTION

The UTC 100V N-Channel enhancement mode power field effect transistors (MOSFET) are produced by UTC's planar stripe, DMOS technology which has been tailored especially in the avalanche and commutation mode to minimize on-state resistance, provide superior switching performance, and withstand high energy pulse. They are suited for low voltage applications such as audio amplifier, high efficiency switching DC/DC converters, and DC motor control.

■ FEATURES

* $R_{DS(ON)}$ < 0.1Ω @ V_{GS}=10V, I_D=7.8A
* Fast switching capability
* Avalanche energy Specified
* Improved dv/dt capability, high ruggedness

■ SYMBOL

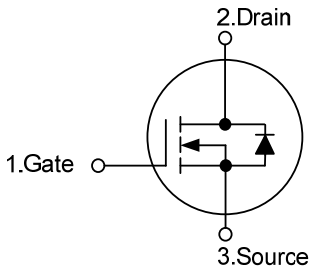

Copyright © 2015 Unisonic Technologies Co., Ltd

■ ORDERING INFORMATION

Ordering Number		Package	Pin Assignment			Packing
Lead Free	Halogen Free		1	2	3	
19N10L-T3P-T	19N10G-T3P-T	TO-3P	G	D	S	Tube
19N10L-TA3-T	19N10G-TA3-T	TO-220	G	D	S	Tube
19N10L-TF3-T	19N10G-TF3-T	TO-220F	G	D	S	Tube
19N10L-TF1-T	19N10G-TF1-T	TO-220F1	G	D	S	Tube
19N10L-TM3-T	19N10G-TM3-T	TO-251	G	D	S	Tube
19N10L-TMS-T	19N10G-TMS-T	TO-251S	G	D	S	Tube
19N10L-TMS2-T	19N10G-TMS2-T	TO-251S2	G	D	S	Tube
19N10L-TMS4-T	19N10G-TMS4-T	TO-251S4	G	D	S	Tube
19N10L-TN3-R	19N10G-TN3-R	TO-252	G	D	S	Tape Reel
19N10L-TQ2-R	19N10G-TQ2-R	TO-263	G	D	S	Tape Reel
19N10L-TQ2-T	19N10G-TQ2-T	TO-263	G	D	S	Tube

Note: Pin Assignment: G: Gate D: Drain S: Source

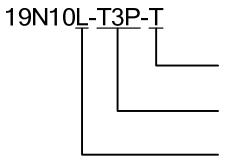

(1) T: Tube, R: Tape Reel
(2) T3P: TO-3P, TA3: TO-220, TF3: TO-220F, TF1: TO-220F1, TM3: TO-251, TMS: TO-251S, TMS2: TO-251S2, TMS4: TO-251S4, TN3: TO-252, TQ2: TO-263
(3) L: Lead Free, G: Halogen Free and Lead Free

■ MARKING

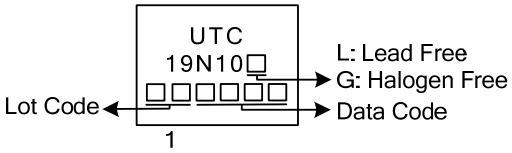

■ ABSOLUTE MAXIMUM RATINGS (T_C=25°C, unless otherwise specified)

PARAMETER		SYMBOL	RATINGS	UNIT
Drain-Source Voltage		V_{DSS}	100	V
Gate-Source Voltage		V_{GSS}	± 25	V
Continuous Drain Current	T_C=25°C	I_D	15.6	A
	T_C=100°C		9.8	A
Pulsed Drain Current (Note 2)		I_{DM}	62.4	A
Avalanche Current (Note 2)		I_{AR}	15.6	A
Single Pulsed Avalanche Energy (Note 3)		E_{AS}	220	mJ
Repetitive Avalanche Energy (Note 2)		E_{AR}	5.0	mJ
Peak Diode Recovery dv/dt (Note 4)		dv/dt	6.0	V/ns
Power Dissipation	TO-220/TO-263	P_D	62.5	W
	TO-220F/TO-220F1		38	W
	TO-251/TO-251S TO-251S2/TO-251S4 TO-252		50	W
	TO-3P		178	W
Junction Temperature		T_J	+150	°C
Storage Temperature		T_{STG}	-55 ~ +150	°C

Note: 1. Absolute maximum ratings are those values beyond which the device could be permanently damaged. Absolute maximum ratings are stress ratings only and functional device operation is not implied.
2. Pulse width limited by $T_{J(MAX)}$
3. L=1.8mH, I_{AS}=15.6A, V_{DD}=25V, R_G=25 Ω, Starting T_J=25°C
4. I_{SD}≤19A, di/dt ≤ 300A/μs, V_{DD}≤BV_{DSS}, Starting T_J=25°C

■ THERMAL DATA

PARAMETER		SYMBOL	RATINGS	UNIT
Junction to Ambient	TO-220/TO-220F TO-220F1/TO-263	θ_{JA}	62.5	°C/W
	TO-251/TO-251S TO-251S2/TO-251S4 TO-252		50	°C/W
	TO-3P		40	°C/W
Junction to Case	TO-220/TO-263	θ_{JC}	2.0	°C/W
	TO-220F/TO-220F1		3.95	°C/W
	TO-251/TO-251S TO-251S2/TO-251S4 TO-252		2.5	°C/W
	TO-3P		0.7	°C/W

■ ELECTRICAL CHARACTERISTICS (T_J=25°C, unless otherwise specified)

PARAMETER		SYMBOL	TEST CONDITIONS	MIN	TYP	MAX	UNIT
OFF CHARACTERISTICS							
Drain-Source Breakdown Voltage		BV_{DSS}	V_{GS}=0V, I_D=250μA	100			V
Breakdown Voltage Temperature Coefficient		$\Delta BV_{DSS}/\Delta T_J$	I_D=250μA, Referenced to 25°C		0.1		V/°C
Drain-Source Leakage Current		I_{DSS}	V_{DS}=100V, V_{GS}=0V			1	μA
			V_{DS}=100V, T_J=125°C			10	μA
Gate-Source Leakage Current	Forward	I_{GSS}	V_{GS}=25V, V_{DS}=0V			100	nA
	Reverse		V_{GS}=-25V, V_{DS}=0V			-100	
ON CHARACTERISTICS							
Gate Threshold Voltage		$V_{GS(TH)}$	V_{DS}=V_{GS}, I_D=250μA	2.0		4.0	V
Static Drain-Source On-Resistance		$R_{DS(ON)}$	V_{GS}=10V, I_D=7.8A		0.078	0.1	Ω
Forward Transconductance		g_{FS}	V_{DS}=40V, I_D=7.8A (Note 1)			11	S
DYNAMIC PARAMETERS							
Input Capacitance		C_{ISS}	V_{DS}=25V, V_{GS}=0V, f=1.0MHz		600	780	pF
Output Capacitance		C_{OSS}			165	215	pF
Reverse Transfer Capacitance		C_{RSS}			32	40	pF
SWITCHING PARAMETERS							
Total Gate Charge		Q_G	V_{DS}=50V, I_D=1.3A, V_{GS}=10V (Note 1, 2)		19	25	nC
Gate Source Charge		Q_{GS}			6		nC
Gate Drain Charge		Q_{GD}			6		nC
Turn-ON Delay Time		$t_{D(ON)}$	V_{DD}=30V, I_D=0.5A, R_G=25Ω (Note 1, 2)		45	60	ns
Turn-ON Rise Time		t_R			70	90	ns
Turn-OFF Delay Time		$t_{D(OFF)}$			165	250	ns
Turn-OFF Fall-Time		t_F			78	90	ns
SOURCE- DRAIN DIODE RATINGS AND CHARACTERISTICS							
Diode Forward Voltage		V_{SD}	V_{GS}=0V, I_S=15.6A			1.5	V
Maximum Body-Diode Continuous Current		I_S				15.6	A
Maximum Pulsed Drain-Source Diode Forward Current		I_{SM}				62.4	A
Body Diode Reverse Recovery Time		t_{RR}	V_{GS}= 0V, I_S=19A, dI_F/dt=100A/μs (Note 1)		78		ns
Body Diode Reverse Recovery Charge		Q_{RR}			200		nC

Note: 1. Pulse Test : Pulse width ≤300μs, Duty cycle≤ 2%
2. Essentially independent of operating temperature

■ TEST CIRCUITS AND WAVEFORMS

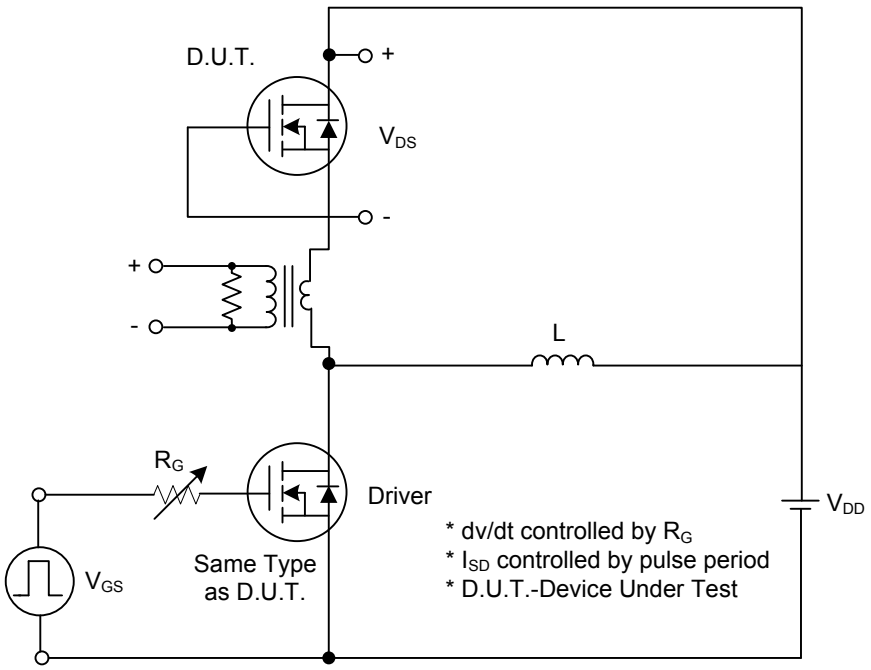

Fig. 1A Peak Diode Recovery dv/dt Test Circuit

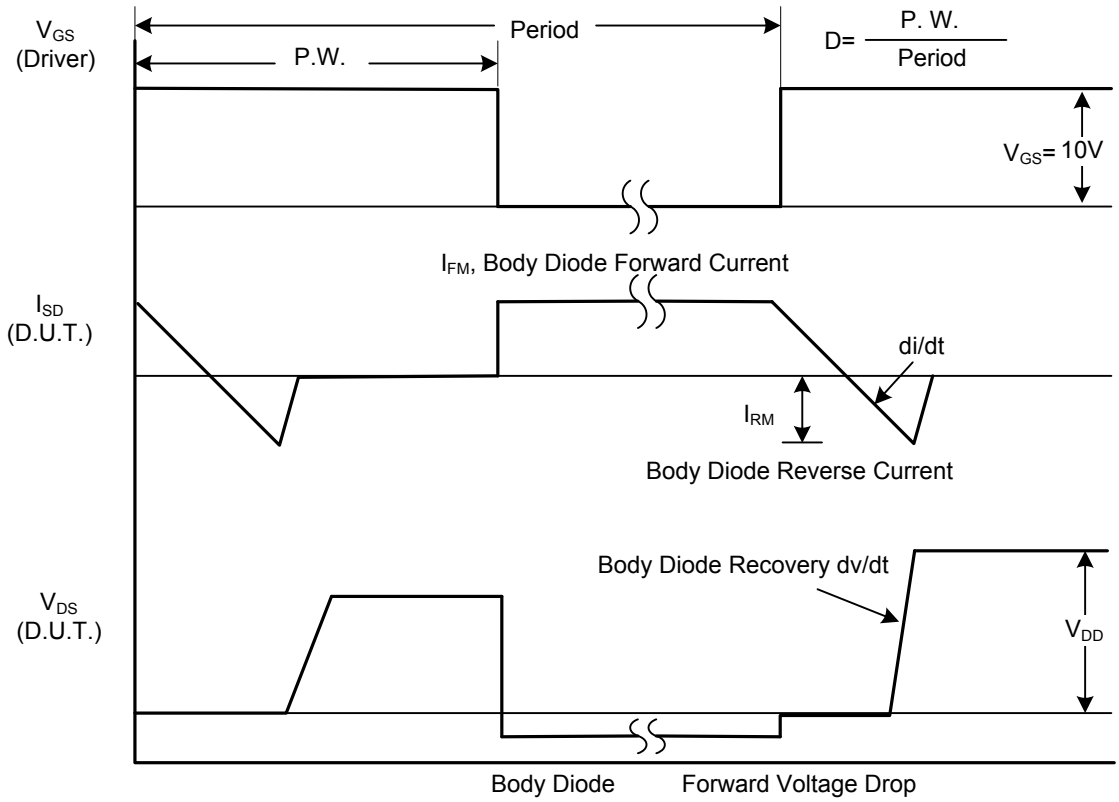

Fig. 1B Peak Diode Recovery dv/dt Waveforms

■ TEST CIRCUITS AND WAVEFORMS (Cont.)

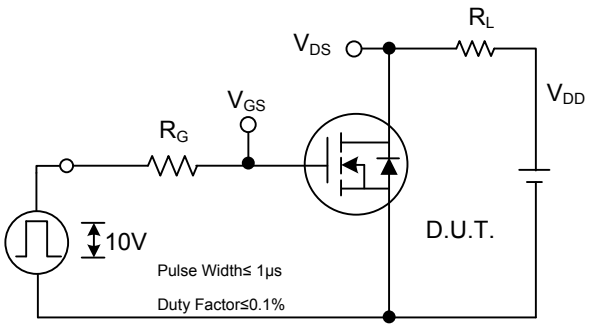

Fig. 2A Switching Test Circuit

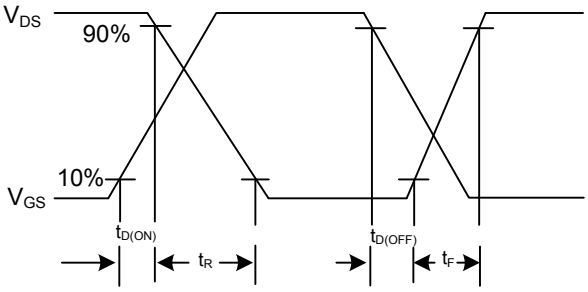

Fig. 2B Switching Waveforms

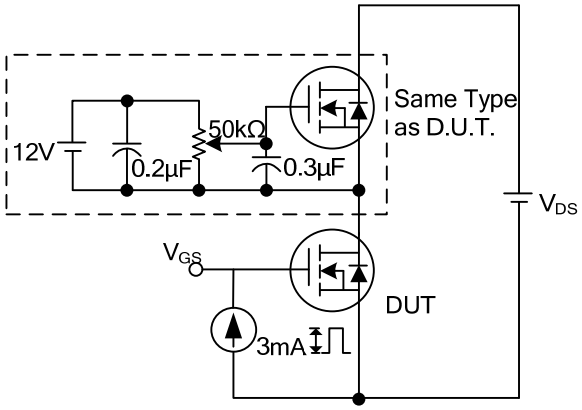

Fig. 3A Gate Charge Test Circuit

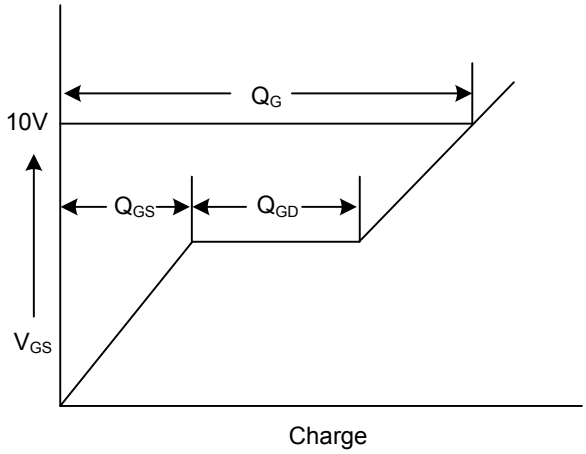

Fig. 3B Gate Charge Waveform

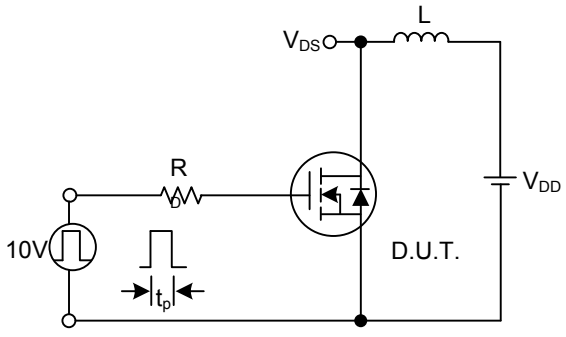

Fig. 4A Unclamped Inductive Switching Test Circuit

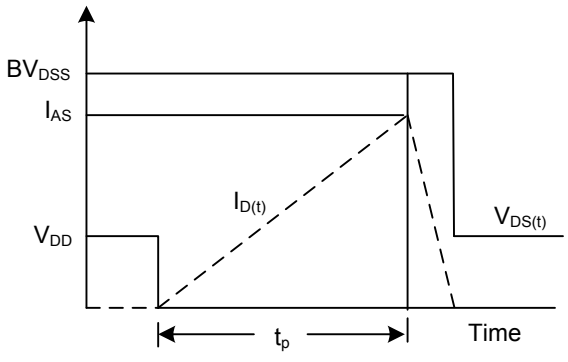

Fig. 4B Unclamped Inductive Switching Waveforms

■ TYPICAL CHARACTERISTICS

Drain Current vs. Source to Drain Voltage

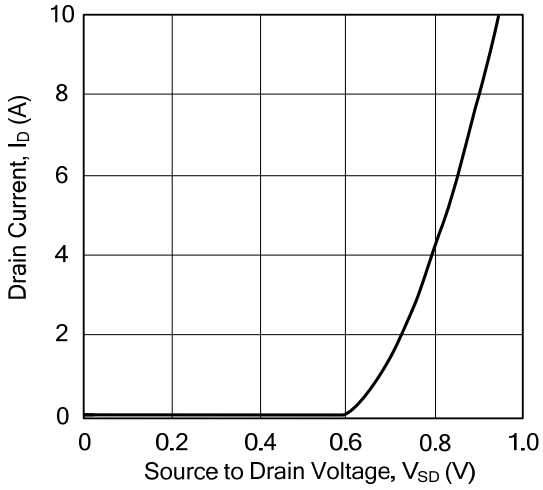

Drain-Source On-State Resistance Characteristics

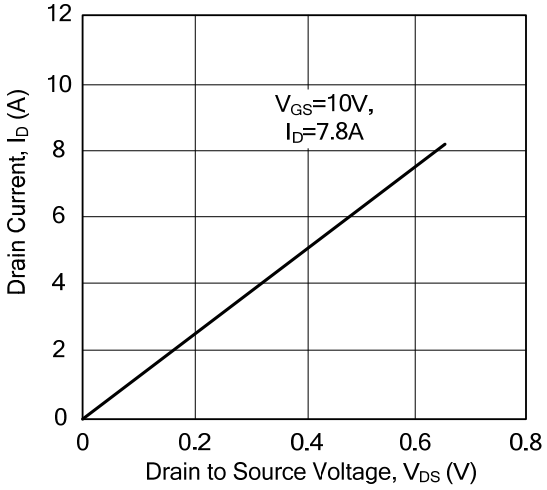

Drain Current vs. Gate Threshold Voltage

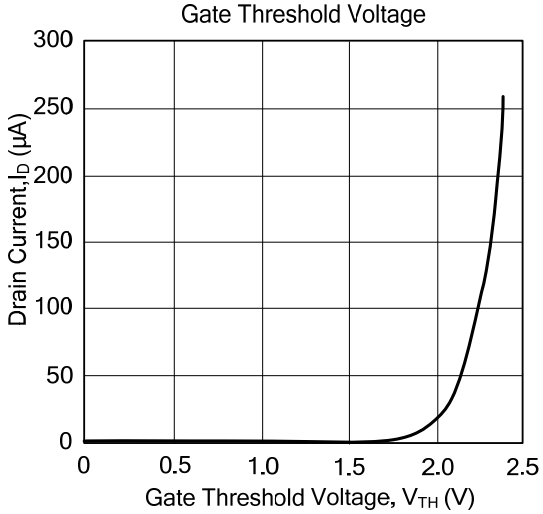

Drain Current vs. Drain-Source Breakdown Voltage

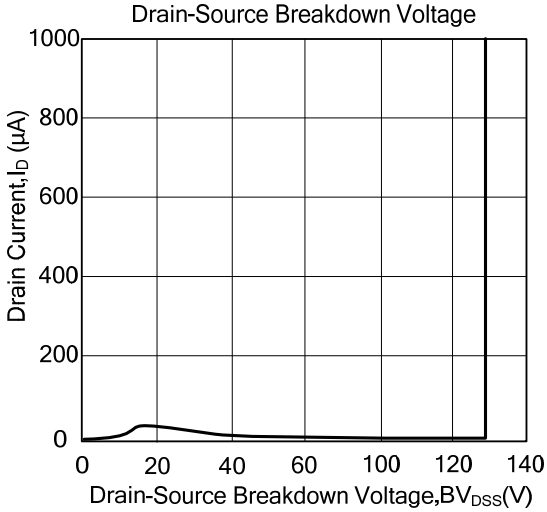

Transient Thermal Response Curve

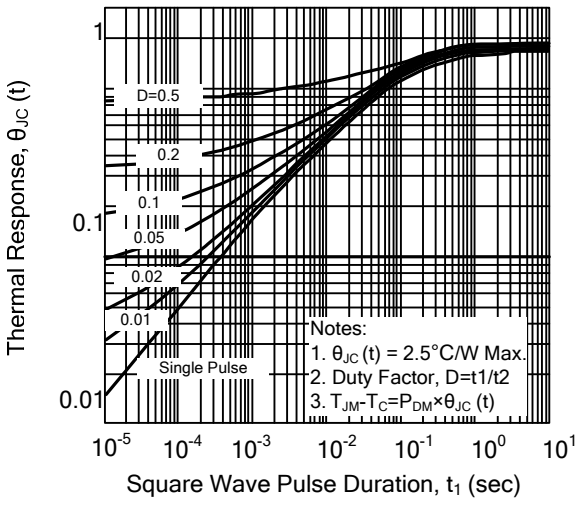

Safe Operating Area

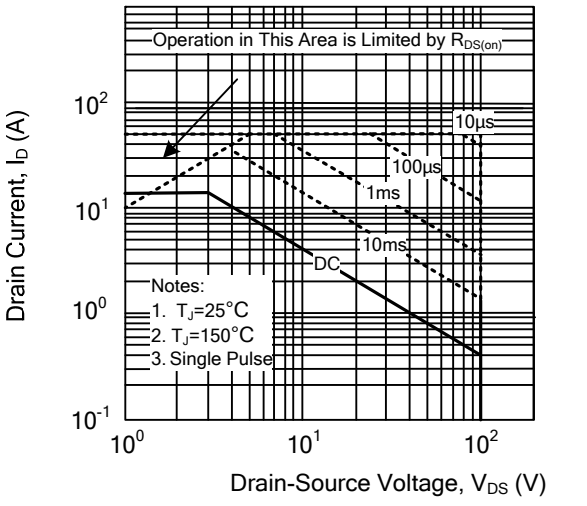

■ TYPICAL CHARACTERISTICS(Cont.)

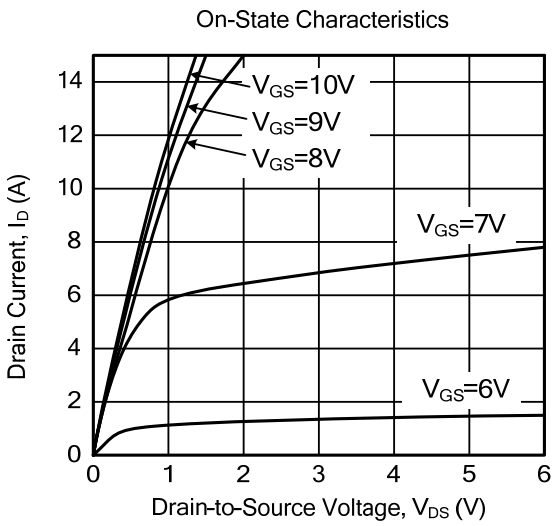

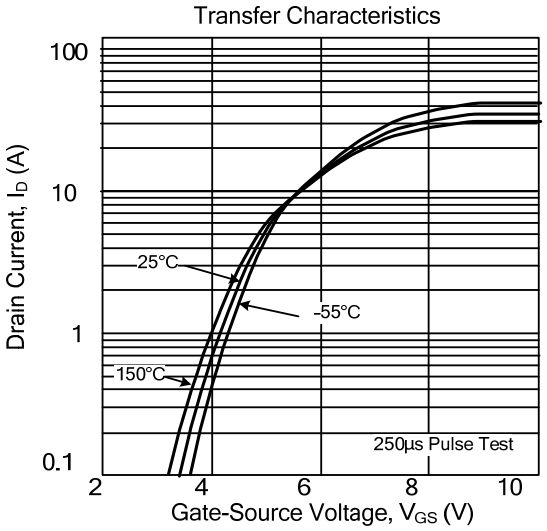

UTC assumes no responsibility for equipment failures that result from using products at values that exceed, even momentarily, rated values (such as maximum ratings, operating condition ranges, or other parameters) listed in products specifications of any and all UTC products described or contained herein. UTC products are not designed for use in life support appliances, devices or systems where malfunction of these products can be reasonably expected to result in personal injury. Reproduction in whole or in part is prohibited without the prior written consent of the copyright owner. The information presented in this document does not form part of any quotation or contract, is believed to be accurate and reliable and may be changed without notice.

ENTEGRECİ

Bu belge www.entegreci.com üzerinden sunulmaktadır.

Elektronik komponent tedarikinde Entegreci

Entegreci, Eskişehir merkezli, Türkiye geneline satış yapan bir elektronik komponent mağazasıdır. Entegreler (IC), mikrodenetleyiciler, transistörler, diyotlar, pasif elemanlar, konnektörler, modüller ve geliştirme kartları tek adetten seri üretim adetlerine kadar satılır. Ürün sayfalarında güncel stok durumunu, fiyatı ve datasheet bağlantısını bulabilirsiniz.

Parça koduyla arama

Üretici parça numarasını yazın; stok ve fiyatı hemen görün.

www.entegreci.com

Ürün kategorileri

Entegreden kapasitöre tüm elektronik komponent kategorileri.

Kategorilere göz atın

Üreticiler

Aradığınız üreticinin ürünlerini tek sayfada inceleyin.

Üreticileri görün

Toplu alım ve teklif

Listede olmayan ya da yüksek adetli parçalar için teklif isteyin.

Teklif isteyin

www.entegreci.com | **destek@entegreci.com** | **0850 305 90 34**

Entegreci is an online electronic components store based in Türkiye. Search by manufacturer part number to see stock, prices and datasheets for integrated circuits, microcontrollers, transistors, passive components and connectors, or request a quote for parts that are not listed.

Bu sayfa Entegreci tarafından eklenmiştir. Belgenin önceki sayfaları asıl yayıncısına aittir ve içeriği değiştirilmemiştir; en güncel sürüm için belgenin yayıncısına başvurun.