| | |
|---|---|
| $V_{DSS}$ | -20 V |
| $I_D$ | -5 A |
| $R_{DS(ON)}$ | 30 mΩ |

## DESCRIPTION

*These P-Channel enhancement mode power field effect transistors are using trench DMOS technology. This advanced technology has been especially tailored to minimize on-state resistance, provide superior switching performance, and withstand high energy pulse in the avalanche and commutation mode. These devices are well suited for high efficiency fast switching applications.*

## FEATURES

*-20V,-5.0A, RDS(ON) =30mΩ@VGS =-4.5V*
*Improved dv/dt capability*
*Fast switching*
*Green Device Available*

D3UZL

**SOT-23**

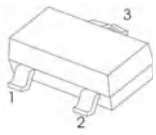


1. GATE
2. SOURCE
3. DRAIN

**Equivalent Circuit**

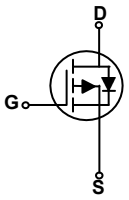


## MAXIMUM RATINGS AND ELECTRICAL CHARACTERISTICS

### Absolute Maximum Ratings $T_C$=25℃ unless otherwise noted

| Symbol | Parameter | Rating | Units |
|---|---|---|---|
| $V_{DS}$ | Drain-Source Voltage | -20 | V |
| $V_{GS}$ | Gate-Source Voltage | ±12 | V |
| $I_D$ | Drain Current – Continuous ($T_C$=25℃) | -5.0 | A |
| | Drain Current – Continuous ($T_C$=100℃) | -3.7 | A |
| $I_{DM}$ | Drain Current – Pulsed[1] | -20 | A |
| $P_D$ | Power Dissipation ($T_C$=25℃) | 1.56 | W |
| | Power Dissipation – Derate above 25℃ | 0.012 | W/℃ |
| $T_{STG}$ | Storage Temperature Range | -55 to 150 | ℃ |
| $T_J$ | Operating Junction Temperature Range | -55 to 150 | ℃ |

### Thermal Characteristics

| Symbol | Parameter | Typ. | Max. | Unit |
|---|---|---|---|---|
| $R_{\theta JA}$ | Thermal Resistance Junction to ambient | --- | 80 | ℃/W |

## Electrical Characteristics ($T_J$ = 25°C unless otherwise specified)

### Off Characteristics

| Symbol | Parameter | Conditions | Min. | Typ. | Max. | Unit |
|---|---|---|---|---|---|---|
| $BV_{DSS}$ | Drain-Source Breakdown Voltage | $V_{GS}$=0V , $I_D$=-250uA | -20 | --- | --- | V |
| $\triangle BV_{DSS}/\triangle T_J$ | $BV_{DSS}$ Temperature Coefficient | Reference to 25℃ , $I_D$=-1mA | --- | -0.02 | --- | V/℃ |
| $I_{DSS}$ | Drain-Source Leakage Current | $V_{DS}$=-20V , $V_{GS}$=0V , $T_J$=25℃ | --- | --- | -1 | uA |
| | | $V_{DS}$=-16V , $V_{GS}$=0V , $T_J$=125℃ | --- | --- | -10 | uA |
| $I_{GSS}$ | Gate-Source Leakage Current | $V_{GS}$=±12V , $V_{DS}$=0V | --- | --- | ±100 | nA |

### On Characteristics

| | | | | | | |
|---|---|---|---|---|---|---|
| $R_{DS(ON)}$ | Static Drain-Source On-Resistance | $V_{GS}$=-4.5V , $I_D$=-4A | --- | 30 | 39 | mΩ |
| | | $V_{GS}$=-2.5V , $I_D$=-3A | --- | 40 | 50 | |
| $V_{GS(th)}$ | Gate Threshold Voltage | | -0.4 | -0.6 | -1 | V |
| $\triangle V_{GS(th)}$ | $V_{GS(th)}$ Temperature Coefficient | $V_{GS}$=$V_{DS}$ , $I_D$ =-250uA | --- | 2 | --- | mV/℃ |
| gfs | Forward Transconductance | $V_{DS}$=-10V , $I_S$=-3A | --- | 8.4 | --- | S |

### Dynamic and switching Characteristics

| | | | | | | |
|---|---|---|---|---|---|---|
| $Q_g$ | Total Gate Charge[2,3] | $V_{DS}$=-10V , $V_{GS}$=-4.5V , $I_D$=-4A | --- | 16.1 | --- | nC |
| $Q_{gs}$ | Gate-Source Charge[2,3] | | --- | 1.8 | --- | |
| $Q_{gd}$ | Gate-Drain Charge[2,3] | | --- | 3.8 | --- | |
| $T_{d(on)}$ | Turn-On Delay Time[2,3] | $V_{DD}$=-10V , $V_{GS}$=-4.5V , $R_G$=25Ω $I_D$=-1A | --- | 8.2 | --- | nS |
| $T_r$ | Rise Time[2,3] | | --- | 30 | --- | |
| $T_{d(off)}$ | Turn-Off Delay Time[2,3] | | --- | 71.1 | --- | |
| $T_f$ | Fall Time[2,3] | | --- | 19.8 | --- | |
| $C_{iss}$ | Input Capacitance | $V_{DS}$=-15V , $V_{GS}$=0V , F=1MHz | --- | 1440 | --- | pF |
| $C_{oss}$ | Output Capacitance | | --- | 155 | --- | |
| $C_{rss}$ | Reverse Transfer Capacitance | | --- | 115 | --- | |

### Drain-Source Diode Characteristics and Maximum Ratings

| Symbol | Parameter | Conditions | Min. | Typ. | Max. | Unit |
|---|---|---|---|---|---|---|
| $I_S$ | Continuous Source Current | $V_G$=$V_D$=0V , Force Current | --- | --- | -5.0 | A |
| $I_{SM}$ | Pulsed Source Current | | --- | --- | -10 | A |
| $V_{SD}$ | Diode Forward Voltage | $V_{GS}$=0V , $I_S$=-1A , $T_J$=25℃ | --- | --- | -1.2 | V |

Note :
1. Repetitive Rating : Pulsed width limited by maximum junction temperature.
2. The data tested by pulsed , pulse width ≦ 300us , duty cycle ≦ 2%.
3. Essentially independent of operating temperature.

## RATING AND CHARACTERISTIC CURVES

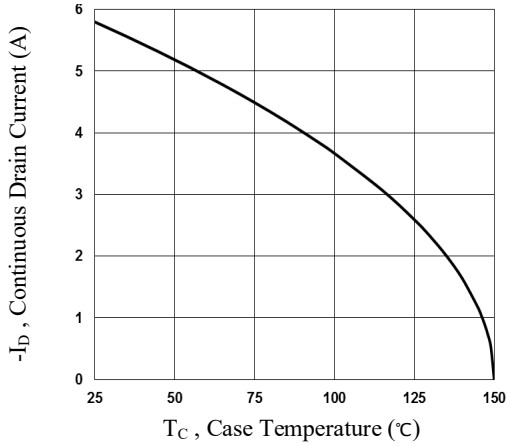


**Fig.1 Continuous Drain Current vs. $T_C$**

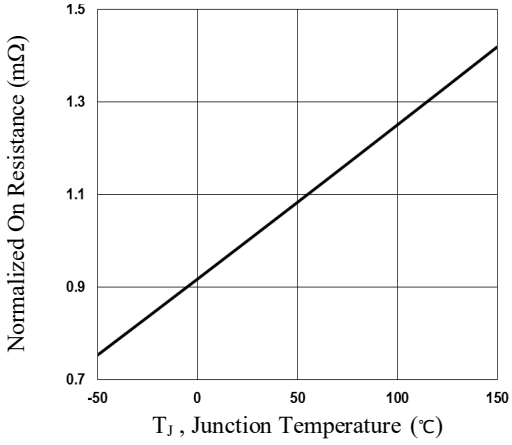


**Fig.2 Normalized RDSON vs. $T_J$**

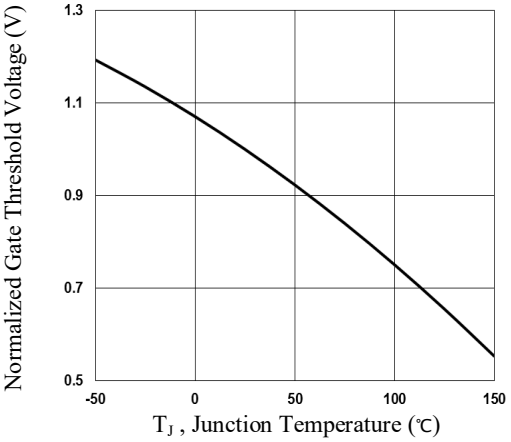


**Fig.3 Normalized $V_{th}$ vs. $T_J$**

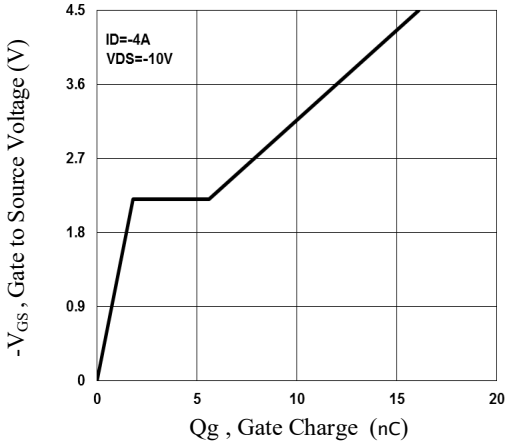


**Fig.4 Gate Charge Waveform**

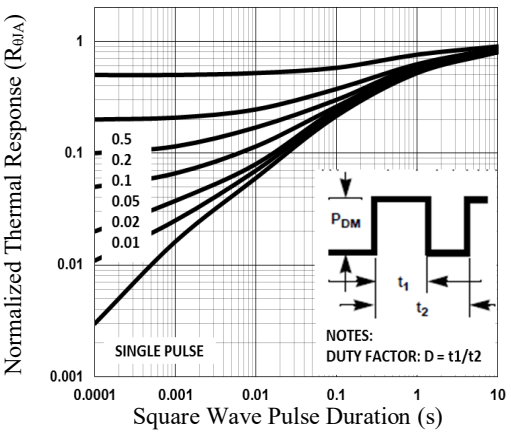


**Fig.5 Normalized Transient Impedance**

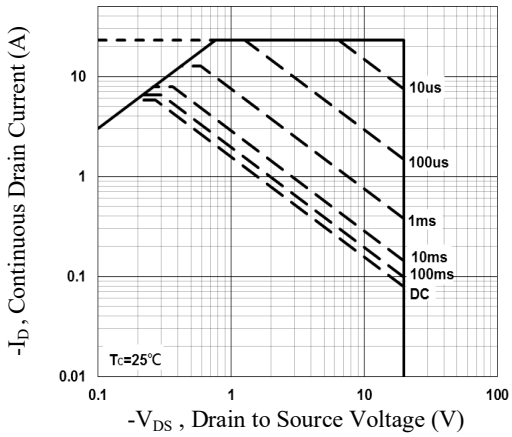


**Fig.6 Maximum Safe Operation Area**

## RATING AND CHARACTERISTIC CURVES

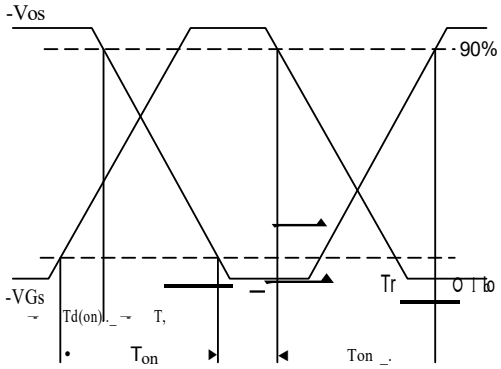


**Fig.7 Switching Time Waveform**

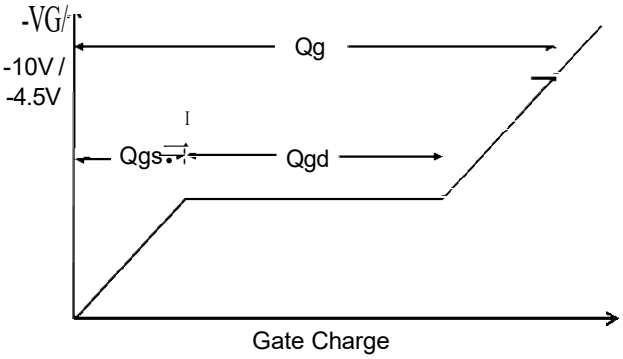


**Fig.8 Gate Charge Waveform**

## Soldering parameters

| Reflow Condition | | Pb-Free assembly (see as bellow) |
|---|---|---|
| Pre Heat | -Temperature Min ($T_{s(min)}$) | +150℃ |
| | -Temperature Max($T_{s(max)}$) | +200℃ |
| | -Time (Min to Max) (ts) | 60-180 secs. |
| Average ramp up rate (Liquid us Temp ($T_L$) to peak) | | 3℃/sec. Max |
| $T_{s(max)}$ to $T_L$ - Ramp-up Rate | | 3℃/sec. Max |
| Reflow | -Temperature($T_L$)(Liquid us) | +217℃ |
| | -Temperature($t_L$) | 60-150 secs. |
| Peak Temp ($T_p$) | | +260(+0/-5)℃ |
| Time within 5℃ of actual Peak Temp ($t_p$) | | 30 secs. Max |
| Ramp-down Rate | | 6℃/sec. Max |
| Time 25℃ to Peak Temp ($T_P$) | | 8 min. Max |
| Do not exceed | | +260℃ |

**FIG5:** Reflow condition

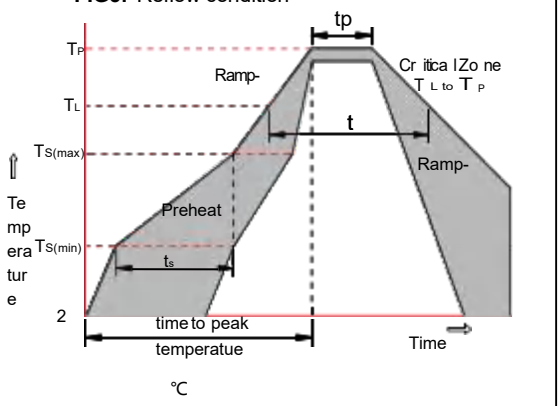


## Package Dimensions & Suggested Pad Layout

**SOT23**

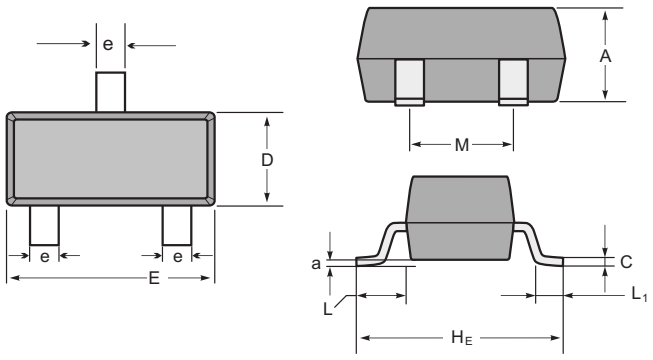


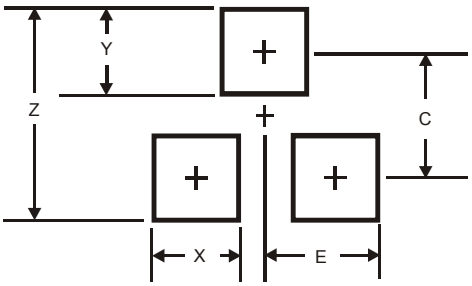


SOT-23 mechanical data

| UNIT | | A | C | D | E | $H_E$ | e | M | L | $L_1$ | a |
|---|---|---|---|---|---|---|---|---|---|---|---|
| mm | max | 1.1 | 0.15 | 1.4 | 3.0 | 2.6 | 0.5 | 1.95 | 0.55 (ref) | 0.36 (ref) | 0.0 |
| | min | 0.9 | 0.08 | 1.2 | 2.8 | 2.2 | 0.3 | 1.7 | | | 0.15 |
| mil | max | 43 | 6 | 55 | 118 | 102 | 20 | 77 | 22 (ref) | 14 (ref) | 0.0 |
| | min | 35 | 3 | 47 | 110 | 87 | 12 | 67 | | | 6 |

| Dimensions | SOT23 |
|---|---|
| Z | 2.9 |
| X | 0.8 |
| Y | 0.9 |
| C | 2.0 |
| E | 1.35 |

## Tape & rell specification

Tape

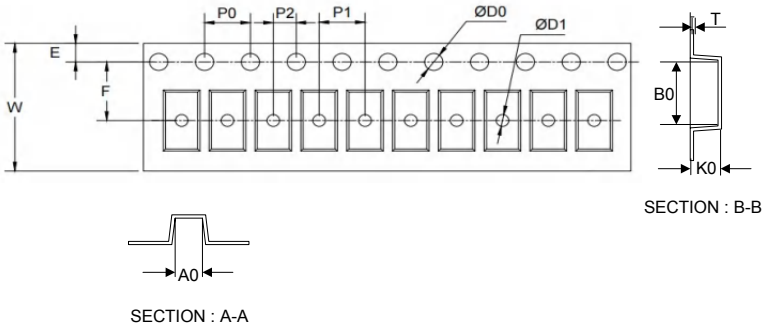


| Symbol | Dimension (mm) |
|---|---|
| P0 | 4.00±0.10 |
| P1 | 4.00±0.10 |
| P2 | 2.00±0.10 |
| D0 | 1.55±0.10 |
| D1 | 1.05±0.10 |
| E | 1.55±0.10 |
| F | 3.60±0.10 |
| W | 8.00±0.10 |
| A0 | 3.80±0.20 |
| B0 | 3.25±0.20 |
| K0 | 1.45±0.10 |
| T | 0.25±0.05 |

7” Reel

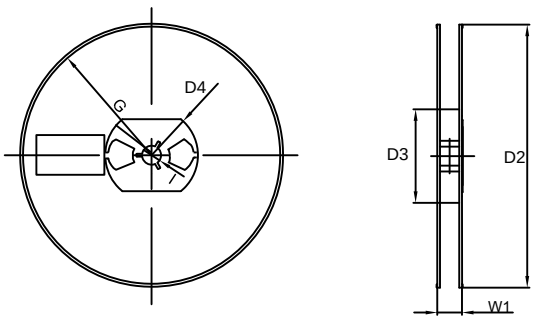


| | |
|---|---|
| D2 | 178.0±3.0 |
| D3 | 55Min. |
| D4 | R24.0±3.0 |
| G | R82.0±3.0 |
| I | 13.0±2.0 |
| W1 | 11.0±3.0 |

Quantity: 3000PCS

ENTEGRECİ

Bu belge www.entegreci.com üzerinden sunulmaktadır.

# Elektronik komponent tedarikinde Entegreci

Entegreci, Eskişehir merkezli, Türkiye geneline satış yapan bir elektronik komponent mağazasıdır. Entegreler (IC), mikrodenetleyiciler, transistörler, diyotlar, pasif elemanlar, konnektörler, modüller ve geliştirme kartları tek adetten seri üretim adetlerine kadar satılır. Ürün sayfalarında güncel stok durumunu, fiyatı ve datasheet bağlantısını bulabilirsiniz.

### Parça koduyla arama

Üretici parça numarasını yazın; stok ve fiyatı hemen görün.

**www.entegreci.com**

### Ürün kategorileri

Entegreden kapasitöre tüm elektronik komponent kategorileri.

**Kategorilere göz atın**

### Üreticiler

Aradığınız üreticinin ürünlerini tek sayfada inceleyin.

**Üreticileri görün**

### Toplu alım ve teklif

Listede olmayan ya da yüksek adetli parçalar için teklif isteyin.

**Teklif isteyin**

**www.entegreci.com** | **destek@entegreci.com** | **0850 305 90 34**

Entegreci is an online electronic components store based in Türkiye. Search by manufacturer part number to see stock, prices and datasheets for integrated circuits, microcontrollers, transistors, passive components and connectors, or request a quote for parts that are not listed.

Bu sayfa Entegreci tarafından eklenmiştir. Belgenin önceki sayfaları asıl yayıncısına aittir ve içeriği değiştirilmemiştir; en güncel sürüm için belgenin yayıncısına başvurun.