V_{DSS}	30 V
I_D	60 A
$R_{DS(ON)}$	4.3mΩ

FEATURES

100% EAS Guaranteed
Green Device Available
Super Low Gate Charge
Excellent CdV/dt effect decline
Advanced high cell density Trench technology



GK XXX
60N03

DESCRIPTION

The 60N03 is the high cell density trenched N-ch MOSFETs, which provide excellent RDSON and gate charge for most of the synchronous buck converter applications.

The 60N03 meet the RoHS and Green Product requirement, 100% EAS guaranteed with full function reliability approved.

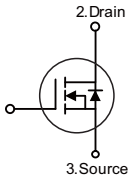

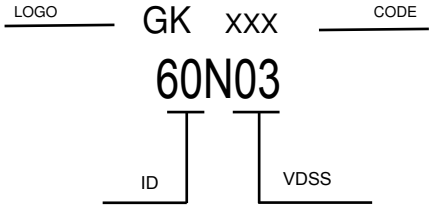

MAXIMUM RATINGS AND ELECTRICAL CHARACTERISTICS

Absolute Maximum Ratings

Symbol	Parameter	Rating		Units
		10s	Steady State	
V_{DS}	Drain-Source Voltage	30		V
V_{GS}	Gate-Source Voltage	±20		V
I_D@T_C=25℃	Continuous Drain Current, V_{GS} @ 10V[1]	60		A
I_D@T_C=100℃	Continuous Drain Current, V_{GS} @ 10V[1]	50		A
I_D@T_A=25℃	Continuous Drain Current, V_{GS} @ 10V[1]	30	19	A
I_D@T_A=70℃	Continuous Drain Current, V_{GS} @ 10V[1]	25	16	A
I_{DM}	Pulsed Drain Current[2]	192		A
EAS	Single Pulse Avalanche Energy[3]	144.7		mJ
I_{AS}	Avalanche Current	53.8		A
P_D@T_C=25℃	Total Power Dissipation[4]	62.5		W
P_D@T_A=25℃	Total Power Dissipation[4]	6	2.42	W
T_{STG}	Storage Temperature Range	-55 to 175		℃
T_J	Operating Junction Temperature Range	-55 to 175		℃

Thermal Data

Symbol	Parameter	Typ.	Max.	Unit
$R_{\theta JA}$	Thermal Resistance Junction-Ambient [1]	---	62	℃/W
$R_{\theta JA}$	Thermal Resistance Junction-Ambient [1] (t ≤10s)	---	25	℃/W
$R_{\theta JC}$	Thermal Resistance Junction-Case[1]	---	2.4	℃/W

Electrical characteristics (T_J=25℃ unless otherwise noted)

Symbol	Parameter	Conditions	Min.	Typ.	Max.	Unit
BV_{DSS}	Drain-Source Breakdown Voltage	V_{GS}=0V , I_D=250uA	30	---	---	V
△BV_{DSS}/△T	BVDSS Temperature Coefficient	Reference to 25℃ , I_D=1mA	---	0.0213	---	V/℃
$R_{DS(ON)}$	Static Drain-Source On-Resistance[2]	V_{GS}=10V , I_D=30A	---	4.3	6	mΩ
		V_{GS}=4.5V , I_D=15A	---	7.8	9	
$V_{GS(th)}$	Gate Threshold Voltage	V_{GS}=V_{DS} , I_D =250uA	1.0	1.5	2.5	V
△$V_{GS(th)}$	$V_{GS(th)}$ Temperature Coefficient		---	-5.73	---	mV/℃
I_{DSS}	Drain-Source Leakage Current	V_{DS}=24V , V_{GS}=0V , T_J=25℃	---	---	1	uA
		V_{DS}=24V , V_{GS}=0V , T_J=55℃	---	---	5	
I_{GSS}	Gate-Source Leakage Current	V_{GS}=±20V , V_{DS}=0V	---	---	±100	nA
gfs	Forward Transconductance	V_{DS}=5V , I_D=30A	---	26.5	---	S
R_g	Gate Resistance	V_{DS}=0V , V_{GS}=0V , f=1MHz	---	1.4	2.8	Ω
Q_g	Total Gate Charge (4.5V)	V_{DS}=15V , V_{GS}=4.5V , I_D=15A	---	31.6	---	nC
Q_{gs}	Gate-Source Charge		---	8.6	---	
Q_{gd}	Gate-Drain Charge		---	11.7	---	
$T_{d(on)}$	Turn-On Delay Time	V_{DD}=15V , V_{GS}=10V , R_G=3.3Ω $_D$=15A	---	9	---	ns
T_r	Rise Time		---	19	---	
$T_{d(off)}$	Turn-Off Delay Time		---	58	---	
T_f	Fall Time		---	15.2	---	
C_{iss}	Input Capacitance	V_{DS}=15V , V_{GS}=0V , f=1MHz	---	3075	4000	pF
C_{oss}	Output Capacitance		---	400	530	
C_{rss}	Reverse Transfer Capacitance		---	315	---	

Diode Characteristics

Symbol	Parameter	Conditions	Min.	Typ.	Max.	Unit
I_S	Continuous Source Current[1,5]	V_G=V_D=0V , Force Current	---	---	80	A
I_{SM}	Pulsed Source Current[2,5]		---	---	132	A
V_{SD}	Diode Forward Voltage[2]	V_{GS}=0V , I_S=1A , T_J=25℃	---	---	1	V
t_{rr}	Reverse Recovery Time	IF=30A , dI/dt=100A/μs ,	---	18	---	nS
Q_{rr}	Reverse Recovery Charge	$_J$=25℃	---	8	---	nC

1.The data tested by surface mounted on a 1 inch^2 FR-4 board with 2OZ copper.
2.The data tested by pulsed , pulse width ≦ 300us , duty cycle ≦ 2%
3.The EAS data shows Max. rating . The test condition is V_{DD}=25V,V_{GS}=10V,L=0.1mH,I_{AS}=53.8A
4.The power dissipation is limited by 175℃ junction temperature
5.The data is theoretically the same as I_D and I_{DM} , in real applications , should be limited by total power dissipation.

RATING AND CHARACTERISTIC CURVES

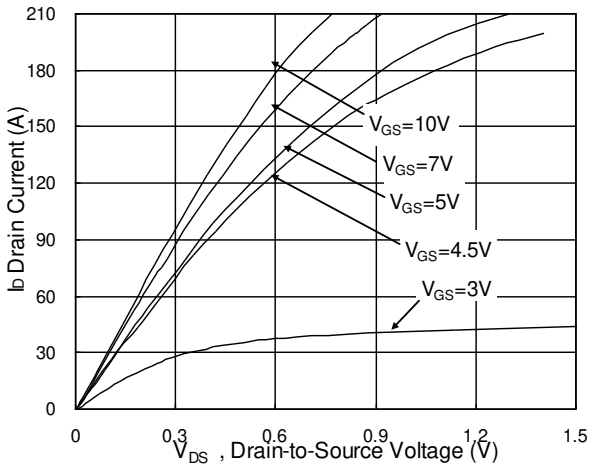

Fig.1 Typical Output Characteristics

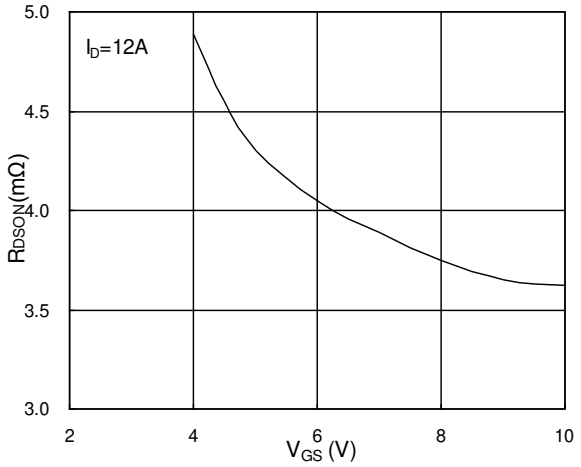

Fig.2 On-Resistance vs. G-S Voltage

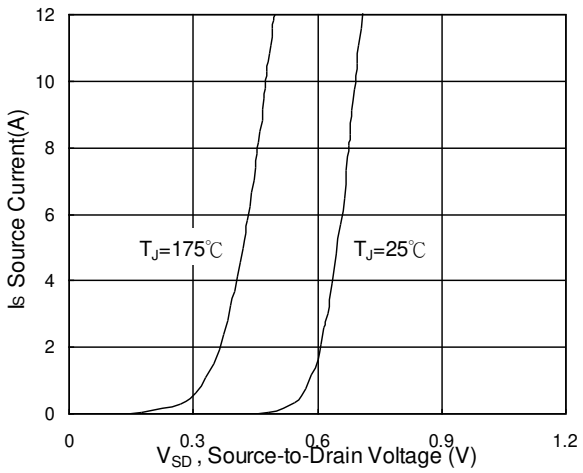

Fig.3 Forward Characteristics of Reverse

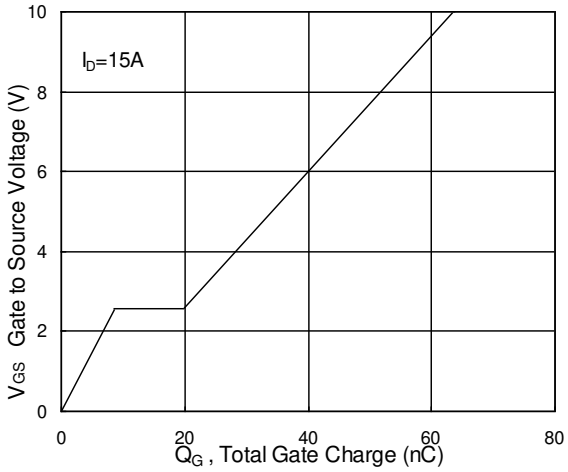

Fig.4 Gate-Charge Characteristics

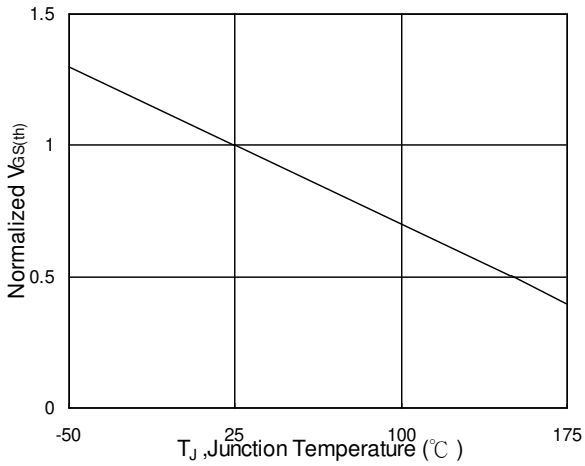

Fig.5 Normalized $V_{GS(th)}$ vs. T_J

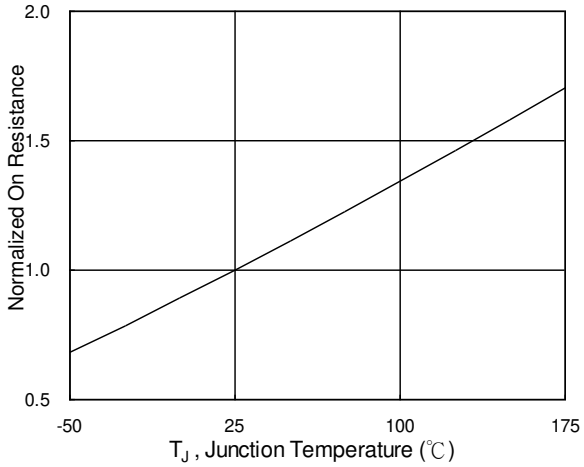

Fig.6 Normalized R_{DSON} vs. T_J

RATING AND CHARACTERISTIC CURVES

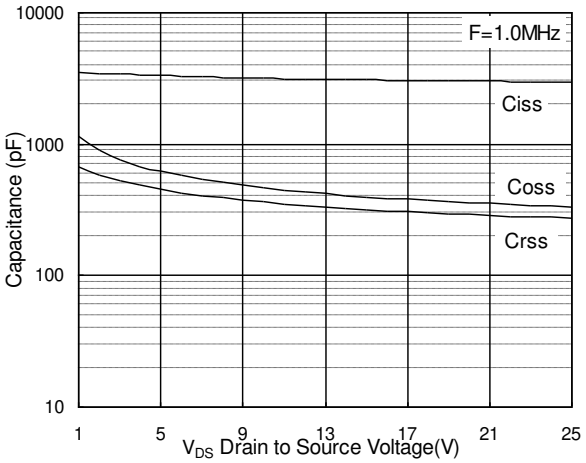

Fig.7 Capacitance

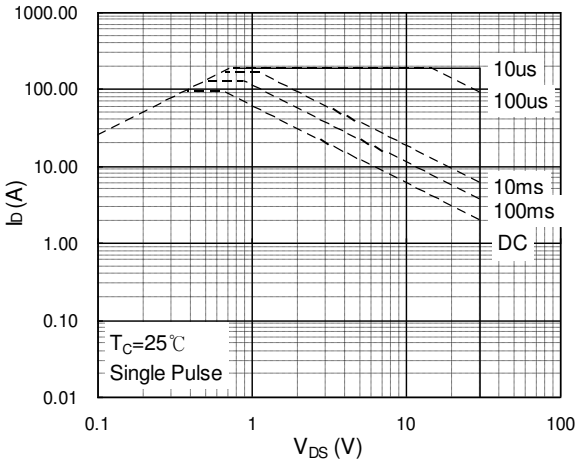

Fig.8 Safe Operating Area

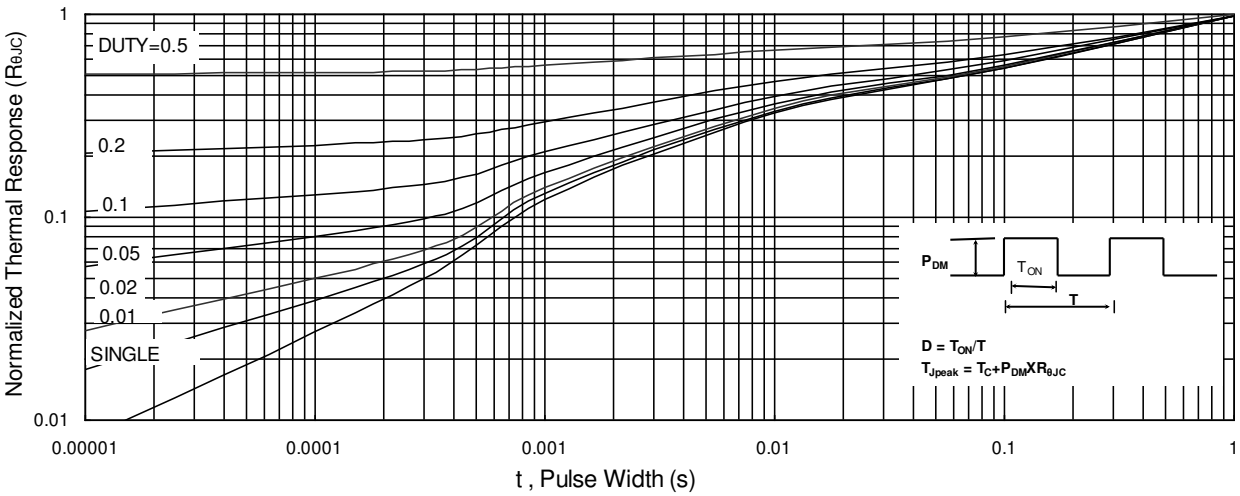

Fig.9 Normalized Maximum Transient Thermal Impedance

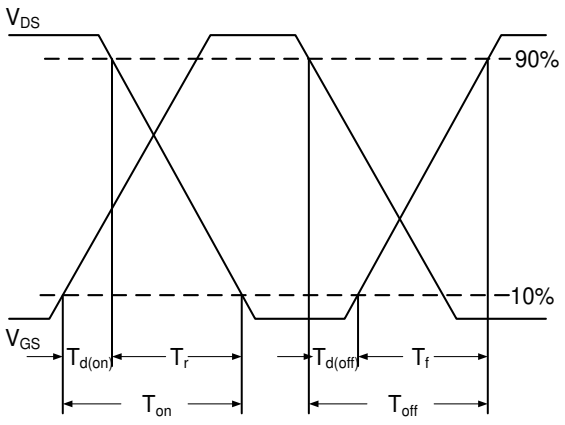

Fig.10 Switching Time Waveform

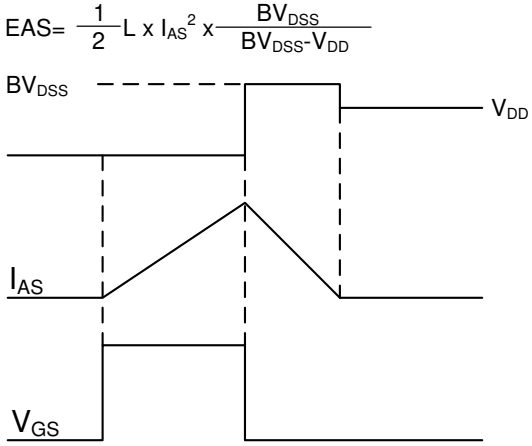

Fig.11 Unclamped Inductive Switching Waveform

Soldering parameters

Reflow Condition		Pb-Free assembly (see as bellow)
Pre Heat	-Temperature Min ($T_{s(min)}$)	+150℃
	-Temperature Max($T_{s(max)}$)	+200℃
	-Time (Min to Max) (ts)	60-180 secs.
Average ramp up rate (Liquid us Temp (T_L) to peak)		3℃/sec. Max
$T_{s(max)}$ to T_L - Ramp-up Rate		3℃/sec. Max
Reflow	-Temperature(T_L)(Liquid us)	+217℃
	-Temperature(t_L)	60-150 secs.
Peak Temp (T_p)		+260(+0/-5)℃
Time within 5℃ of actual Peak Temp (t_p)		30 secs. Max
Ramp-down Rate		6℃/sec. Max
Time 25℃ to Peak Temp (T_P)		8 min. Max
Do not exceed		+260℃

FIG5: Reflow condition

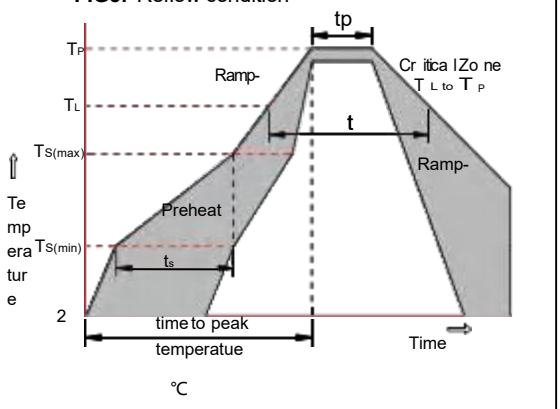

Package Dimensions & Suggested Pad Layout

TO-252

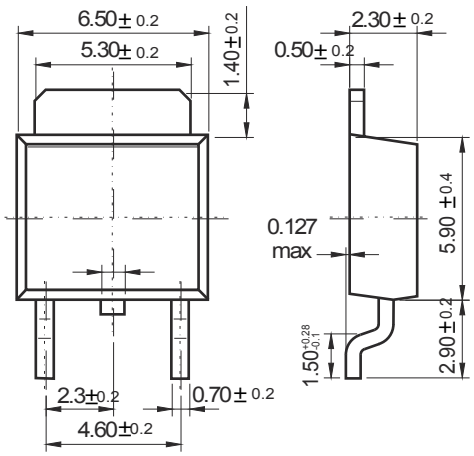

Dimensions in inches and (millimeters)

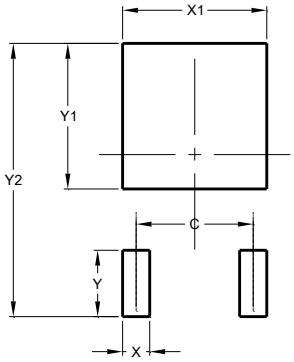

Dimensions	Value (in mm)
C	4.55
X	1.50
X1	5.80
Y	2.70
Y1	6.00
Y2	10.90

Tape & rell specification

Tape

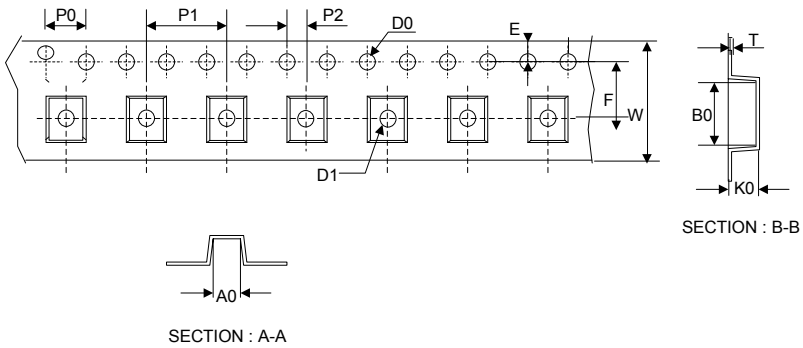

Symbol	Dimension (mm)
P0	4.00±0.20
P1	8.00±0.20
P2	2.00±0.20
D0	1.55±0.15
D1	1.55±0.20
E	1.75±0.20
F	7.50±0.20
W	16.00±0.20
A0	7.10±0.20
B0	10.50±0.20
K0	2.70±0.20
T	0.30±0.10

13” Reel

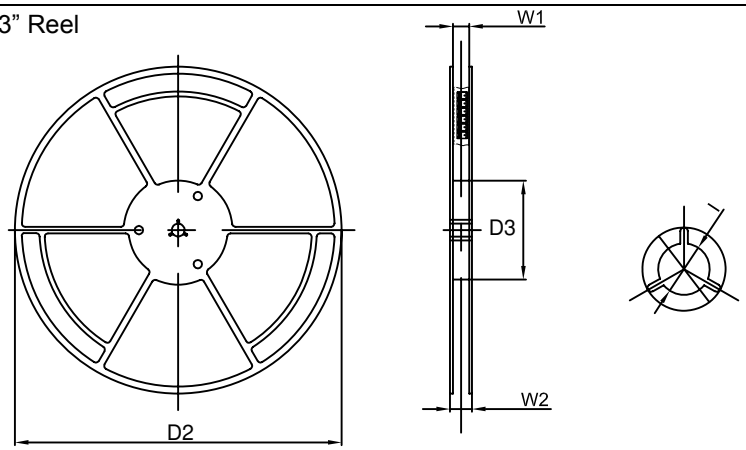

D2	330.0±5.0
D3	100.0±4.0
W1	20.0±5.0
W2	25.0±5.0
I	13.0±2.0

Quantity: 2500PCS

ENTEGRECİ

Bu belge www.entegreci.com üzerinden sunulmaktadır.

Elektronik komponent tedarikinde Entegreci

Entegreci, Eskişehir merkezli, Türkiye geneline satış yapan bir elektronik komponent mağazasıdır. Entegreler (IC), mikrodenetleyiciler, transistörler, diyotlar, pasif elemanlar, konnektörler, modüller ve geliştirme kartları tek adetten seri üretim adetlerine kadar satılır. Ürün sayfalarında güncel stok durumunu, fiyatı ve datasheet bağlantısını bulabilirsiniz.

Parça koduyla arama

Üretici parça numarasını yazın; stok ve fiyatı hemen görün.

www.entegreci.com

Ürün kategorileri

Entegreden kapasitöre tüm elektronik komponent kategorileri.

Kategorilere göz atın

Üreticiler

Aradığınız üreticinin ürünlerini tek sayfada inceleyin.

Üreticileri görün

Toplu alım ve teklif

Listede olmayan ya da yüksek adetli parçalar için teklif isteyin.

Teklif isteyin

www.entegreci.com | **destek@entegreci.com** | **0850 305 90 34**

Entegreci is an online electronic components store based in Türkiye. Search by manufacturer part number to see stock, prices and datasheets for integrated circuits, microcontrollers, transistors, passive components and connectors, or request a quote for parts that are not listed.

Bu sayfa Entegreci tarafından eklenmiştir. Belgenin önceki sayfaları asıl yayıncısına aittir ve içeriği değiştirilmemiştir; en güncel sürüm için belgenin yayıncısına başvurun.