AO3400

N-Channel Enhancement Mode Field Effect Transistor

V_{DSS}	30 V
I_D	5.8 A
$R_{DS(ON)}$	21 mΩ

FEATURES

High density cell design for low $R_{DS(ON)}$
Voltage controlled small signal switch
Rugged and reliable
High saturation current capability

A09T

SOT-23

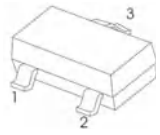

1. GATE
2. SOURCE
3. DRAIN

Equivalent Circuit

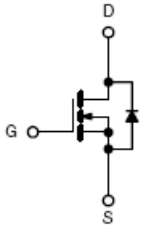

MAXIMUM RATINGS AND ELECTRICAL CHARACTERISTICS

Maximum ratings (T_a=25℃ unless otherwise noted)

Parameter	Symbol	Value	Unit
Drain-Source Voltage	V_{DS}	30	V
Gate-Source Voltage	V_{GS}	±12	V
Continuous Drain Current	I_D	5.8	A
Drain Current-Pulsed (note 1)	I_{DM}	30	A
Power Dissipation	P_D	1.5	W
Thermal Resistance from Junction to Ambient (note 2)	$R_{\theta JA}$	357	℃/W
Junction Temperature	T_J	150	℃
Storage Temperature	T_{STG}	-55~+150	℃

Electrical Characteristics (T_J=25℃ unless otherwise specified)

Parameter	Symbol	Test Condition	Min	Typ	Max	Units
Off Characteristics						
Drain-source breakdown voltage	$V_{(BR)DSS}$	V_{GS} = 0V, I_D =250μA	30			V
Zero gate voltage drain current	I_{DSS}	V_{DS} =24V,V_{GS} = 0V			1	μA
Gate-source leakage current	I_{GSS}	V_{GS} =±12V, V_{DS} = 0V			±100	nA
On characteristics						
Drain-source on-resistance (note 3)	$R_{DS(on)}$	V_{GS} =10V, I_D =5.8A		21	28	mΩ
		V_{GS} =4.5V, I_D =5A			38	mΩ
		V_{GS} =2.5V,I_D=4A			52	mΩ
Forward tranconductance	g_{FS}	V_{DS} =5V, I_D =5A	8			S
Gate threshold voltage	$V_{GS(th)}$	V_{DS} =V_{GS}, I_D =250μA	0.7		1.4	V
Dynamic Characteristics (note 4,5)						
Input capacitance	C_{iss}	V_{DS} =15V,V_{GS} =0V,f =1MHz			1050	pF
Output capacitance	C_{oss}			99		pF
Reverse transfer capacitance	C_{rss}			77		pF
Gate resistance	R_g	V_{DS} =0V,V_{GS} =0V,f =1MHz			3.6	Ω
Switching Characteristics (note 4,5)						
Turn-on delay time	$t_{d(on)}$	V_{GS}=10V,V_{DS}=15V, R_L=2.7Ω,R_{GEN}=3Ω			5	ns
Turn-on rise time	t_r				7	ns
Turn-off delay time	$t_{d(off)}$				40	ns
Turn-off fall time	t_f				6	ns
Drain-source diode characteristics and maximum ratings						
Diode forward voltage (note 3)	V_{SD}	I_S=1A,V_{GS}=0V			1	V

Note :

1. Repetitive Rating : Pulse width limited by maximum junction temperature.
2. Surface Mounted on FR4 Board, t < 5 sec.
3. Pulse Test : Pulse Width≤300μs, Duty Cycle ≤ 2%.
4. Guaranteed by design, not subject to production testing.

RATING AND CHARACTERISTIC CURVES

Output Characteristics

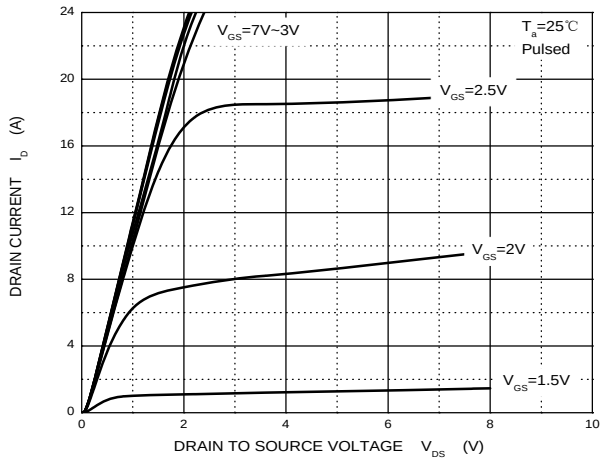

Transfer Characteristics

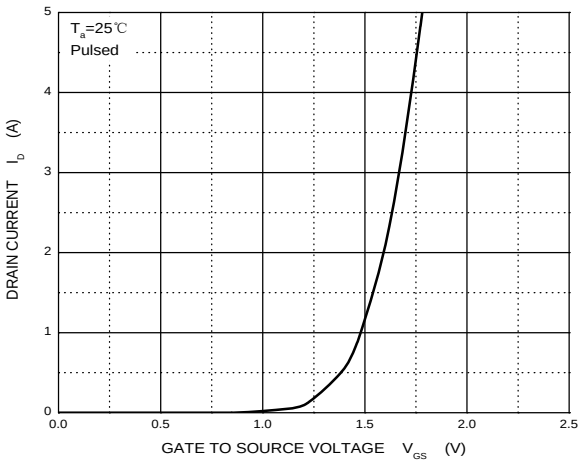

$R_{DS(ON)}$ —— I_D

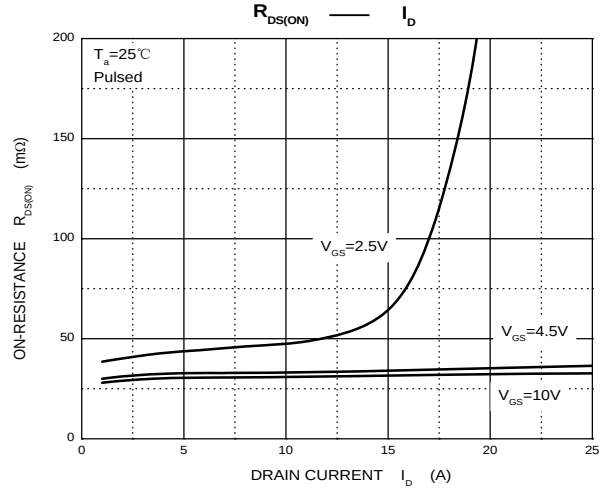

$R_{DS(ON)}$ —— V_{GS}

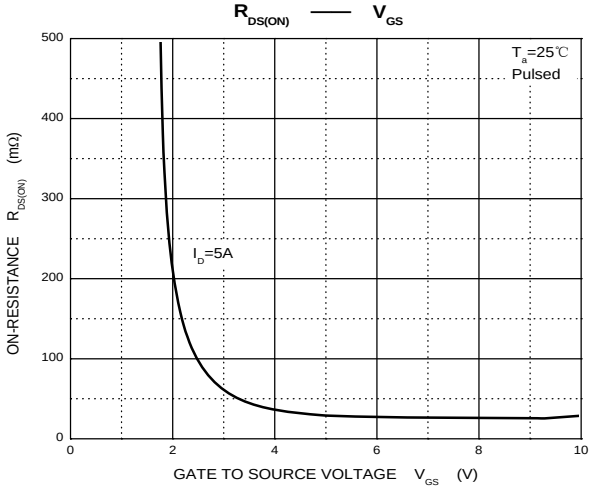

I_S —— V_{SD}

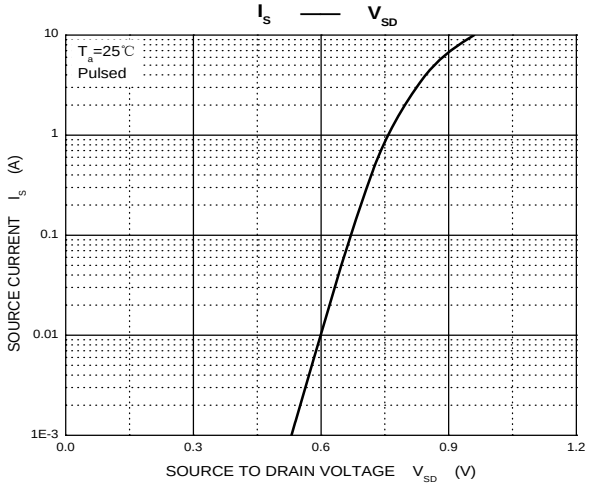

Soldering parameters

Reflow Condition		Pb-Free assembly (see as bellow)
Pre Heat	-Temperature Min ($T_{s(min)}$)	+150℃
	-Temperature Max($T_{s(max)}$)	+200℃
	-Time (Min to Max) (ts)	60-180 secs.
Average ramp up rate (Liquid us Temp (T_L) to peak)		3℃/sec. Max
$T_{s(max)}$ to T_L - Ramp-up Rate		3℃/sec. Max
Reflow	-Temperature(T_L)(Liquid us)	+217℃
	-Temperature(t_L)	60-150 secs.
Peak Temp (T_p)		+260(+0/-5)℃
Time within 5℃ of actual Peak Temp (t_p)		30 secs. Max
Ramp-down Rate		6℃/sec. Max
Time 25℃ to Peak Temp (T_P)		8 min. Max
Do not exceed		+260℃

FIG5: Reflow condition

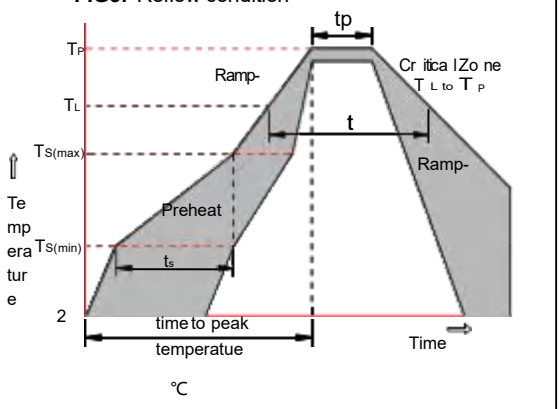

Package Dimensions & Suggested Pad Layout

SOT23

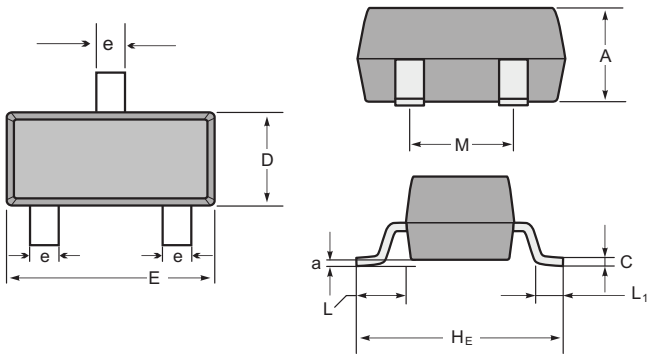

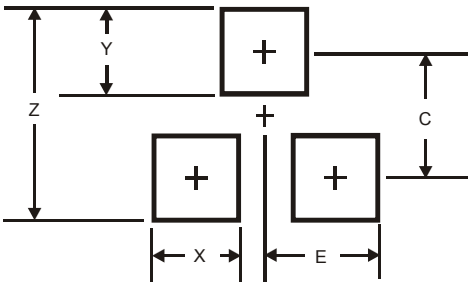

SOT-23 mechanical data

UNIT		A	C	D	E	H_E	e	M	L	L_1	a
mm	max	1.1	0.15	1.4	3.0	2.6	0.5	1.95	0.55 (ref)	0.36 (ref)	0.0
	min	0.9	0.08	1.2	2.8	2.2	0.3	1.7			0.15
mil	max	43	6	55	118	102	20	77	22 (ref)	14 (ref)	0.0
	min	35	3	47	110	87	12	67			6

Dimensions	SOT23
Z	2.9
X	0.8
Y	0.9
C	2.0
E	1.35

Tape & rell specification

Tape

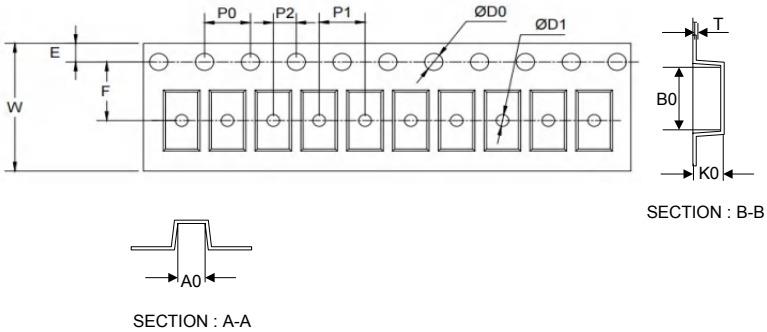

SECTION : A-A

SECTION : B-B

Symbol	Dimension (mm)
P0	4.00±0.10
P1	4.00±0.10
P2	2.00±0.10
D0	1.55±0.10
D1	1.05±0.10
E	1.55±0.10
F	3.60±0.10
W	8.00±0.10
A0	3.80±0.20
B0	3.25±0.20
K0	1.45±0.10
T	0.25±0.05

7" Reel

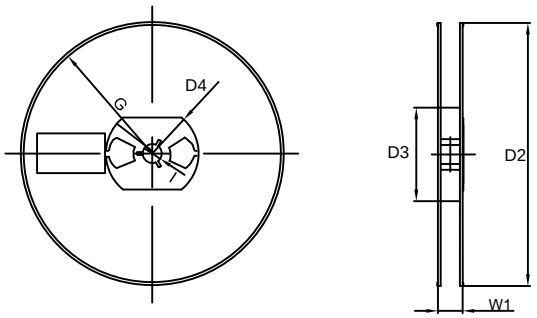

D2	178.0±3.0
D3	55Min.
D4	R24.0±3.0
G	R82.0±3.0
I	13.0±2.0
W1	11.0±3.0

Quantity: 3000PCS

ENTEGRECİ

Bu belge www.entegreci.com üzerinden sunulmaktadır.

Elektronik komponent tedarikinde Entegreci

Entegreci, Eskişehir merkezli, Türkiye geneline satış yapan bir elektronik komponent mağazasıdır. Entegreler (IC), mikrodenetleyiciler, transistörler, diyotlar, pasif elemanlar, konnektörler, modüller ve geliştirme kartları tek adetten seri üretim adetlerine kadar satılır. Ürün sayfalarında güncel stok durumunu, fiyatı ve datasheet bağlantısını bulabilirsiniz.

Parça koduyla arama

Üretici parça numarasını yazın; stok ve fiyatı hemen görün.

www.entegreci.com

Ürün kategorileri

Entegreden kapasitöre tüm elektronik komponent kategorileri.

Kategorilere göz atın

Üreticiler

Aradığınız üreticinin ürünlerini tek sayfada inceleyin.

Üreticileri görün

Toplu alım ve teklif

Listede olmayan ya da yüksek adetli parçalar için teklif isteyin.

Teklif isteyin

www.entegreci.com | **destek@entegreci.com** | **0850 305 90 34**

Entegreci is an online electronic components store based in Türkiye. Search by manufacturer part number to see stock, prices and datasheets for integrated circuits, microcontrollers, transistors, passive components and connectors, or request a quote for parts that are not listed.

Bu sayfa Entegreci tarafından eklenmiştir. Belgenin önceki sayfaları asıl yayıncısına aittir ve içeriği değiştirilmemiştir; en güncel sürüm için belgenin yayıncısına başvurun.