7N65

N-Channel Enhancement Mode MOSFET

V_{DSS}	650 V
I_D	7 A
$R_{DS(ON)}$	1.18 Ω

FEATURES

- 7A,650V,$R_{DS(ON)TYP}$ =1.18 Ω@V_{GS}=10V/3.5A
- Low gate charge
- Low C_{iss}
- Fast switching
- 100% avalanche tested
- Improved dv/dt capability

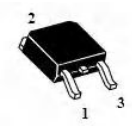



APPLICATION

High frequency switching mode power supply
Electronic ballast
LED power supply

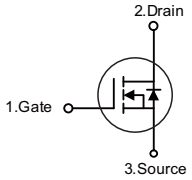

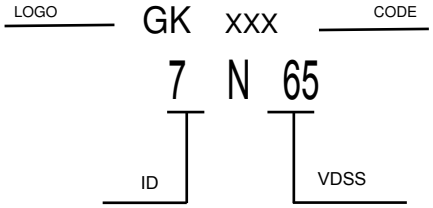

MAXIMUM RATINGS AND ELECTRICAL CHARACTERISTICS

ABSOLUTE MAXIMUM RATINGS (T_C = 25°C, unless otherwise specified)

PARAMETER		SYMBOL	RATINGS	UNIT
Drain-Source Voltage		V_{DSS}	650	V
Gate-Source Voltage		V_{GSS}	±30	V
Avalanche Current (Note 2)		I_{AR}	7	A
Drain Current	Continuous	I_D	7	A
	Pulsed (Note 2)	I_{DM}	29.6	A
Avalanche Energy	Single Pulsed (Note 3)	E_{AS}	530	mJ
	Repetitive (Note 2)	E_{AR}	14.2	mJ
Peak Diode Recovery dv/dt (Note 4)		dv/dt	4.5	V/ns
Power Dissipation		P_D	48	W
Junction Temperature		T_J	+150	°C
Storage Temperature		T_{STG}	-55 ~ +150	°C

Notes: 1. Absolute maximum ratings are those values beyond which the device could be permanently damaged. Absolute maximum ratings are stress ratings only and functional device operation is not implied.
2. Repetitive Rating : Pulse width limited by maximum junction temperature
3. L = 19.5mH, I_{AS} = 7A, V_{DD} = 50V, R_G = 25 Ω, Starting T_J = 25°C
4. I_{SD}≤7A, di/dt≤200A/μs, V_{DD}≤BV_{DSS}, Starting T_J = 25°C

ELECTRICAL CHARACTERISTICS (T_C=25°C, unless otherwise specified)

PARAMETER		SYMBOL	TEST CONDITIONS	MIN	TYP	MAX	UNIT
OFF CHARACTERISTICS							
Drain-Source Breakdown Voltage		BV_{DSS}	V_{GS} = 0V, I_D = 250μA	650			V
Drain-Source Leakage Current		I_{DSS}	V_{DS} = 650V, V_{GS} = 0V			1	μA
Gate- Source Leakage Current	Forward	I_{GSS}	V_{GS} = 30V, V_{DS} = 0V			100	nA
	Reverse		V_{GS} = -30V, V_{DS} = 0V			-100	nA
Breakdown Voltage Temperature Coefficient		$\triangle BV_{DSS}/\triangle T_J$	I_D=250μA,Referenced to 25°C		0.67		V/°C
ON CHARACTERISTICS							
Gate Threshold Voltage		$V_{GS(TH)}$	V_{DS} = V_{GS}, I_D = 250μA	2.0		4.0	V
Static Drain-Source On-State Resistance		$R_{DS(ON)}$	V_{GS} = 10V, I_D = 3.5A		1.18	1.67	Ω
DYNAMIC CHARACTERISTICS							
Input Capacitance		C_{ISS}	V_{DS}=25V, V_{GS}=0V, f=1.0 MHz			1400	pF
Output Capacitance		C_{OSS}				180	pF
Reverse Transfer Capacitance		C_{RSS}			16	21	pF
SWITCHING CHARACTERISTICS							
Turn-On Delay Time		$t_{D(ON)}$	V_{DD} =325V, I_D =7.4A, R_G =25Ω (Note 1, 2)			70	ns
Turn-On Rise Time		t_R				170	ns
Turn-Off Delay Time		$t_{D(OFF)}$				140	ns
Turn-Off Fall Time		t_F				130	ns
SWITCHING CHARACTERISTICS							
Total Gate Charge		Q_G	V_{DS}=520V, I_D = 7A, V_{GS}=10 V (Note 1, 2)		29	38	nC
Gate-Source Charge		Q_{GS}			7		nC
Gate-Drain Charge		Q_{GD}			14.5		nC
DRAIN-SOURCE DIODE CHARACTERISTICS AND MAXIMUM RATINGS							
Drain-Source Diode Forward Voltage		V_{SD}	V_{GS} = 0V, I_S = 7A			1.4	V
Maximum Continuous Drain-Source Diode Forward Current		I_S				7	A
Maximum Pulsed Drain-Source Diode Forward Current		I_{SM}				29.6	A
Reverse Recovery Time		t_{rr}	V_{GS} = 0V, I_S = 7A, dI_F / dt = 100A/μs (Note 1)		320		ns
Reverse Recovery Charge		Q_{RR}			2.4		μC

Notes: 1. Pulse Test: Pulse width≤300μs, Duty cycle≤2%
2. Essentially independent of operating temperature

RATING AND CHARACTERISTIC CURVES

On-Region Characteristics

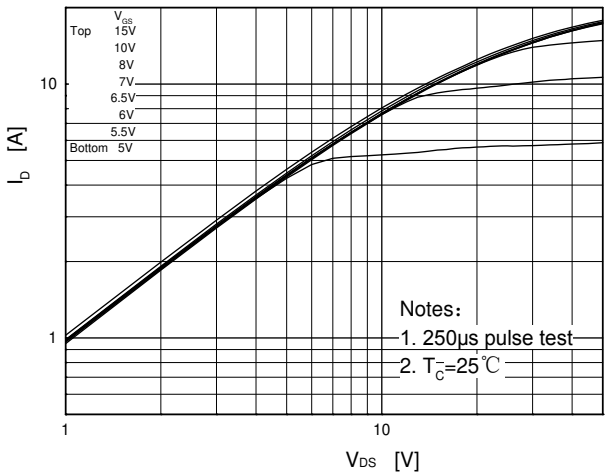

Transfer Characteristics

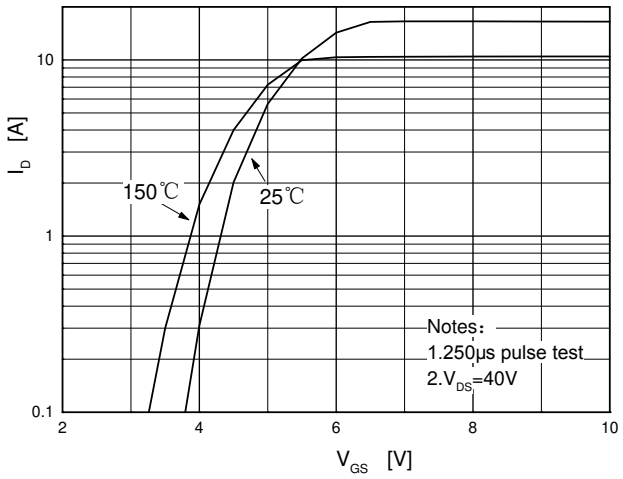

On-Resistance Variation vs. Drain Current and Gate Voltage

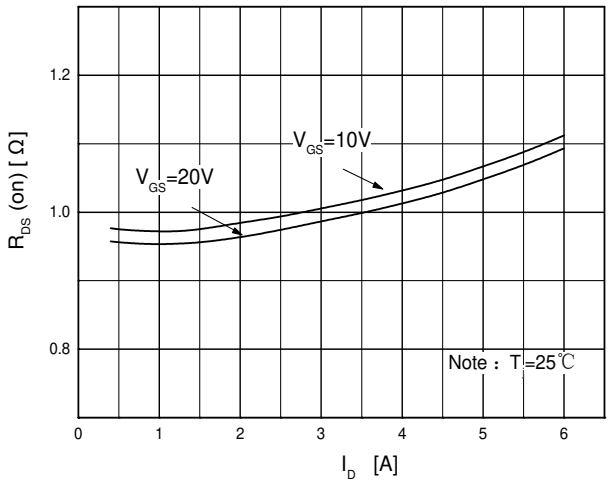

Body Diode Forward Voltage Variation vs. Source Current and Temperature

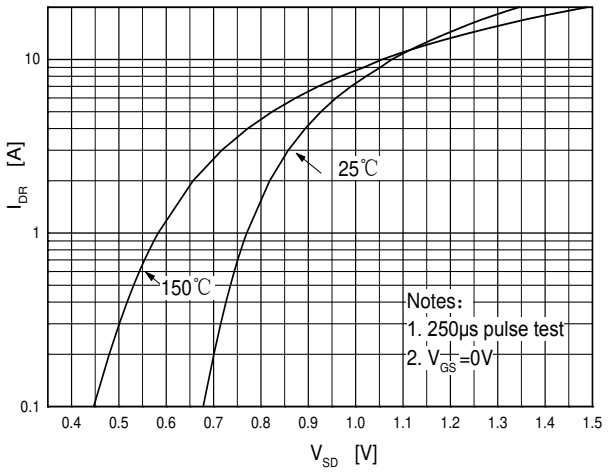

Capacitance Characteristics

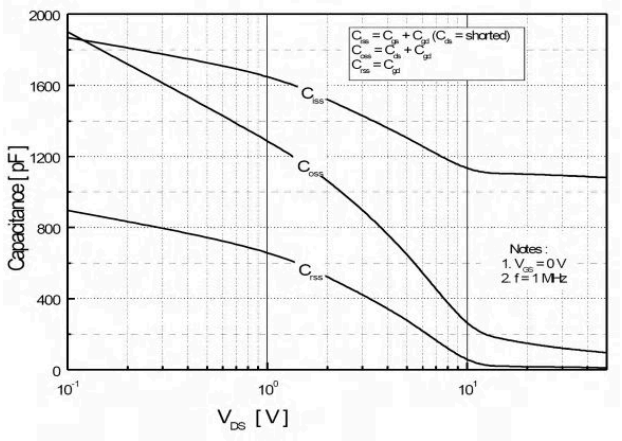

Gate Charge Characteristics

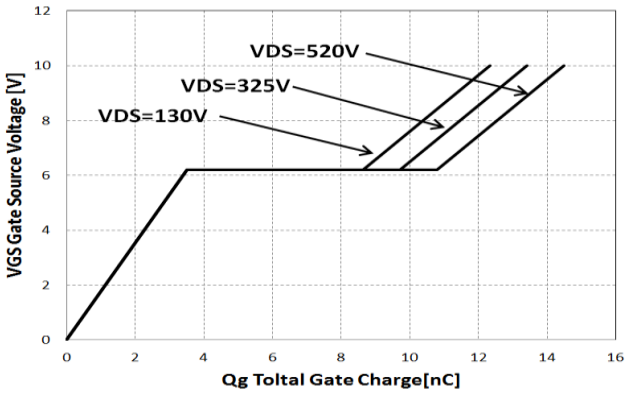

RATING AND CHARACTERISTIC CURVES

Breakdown Voltage Variation vs. Temperature

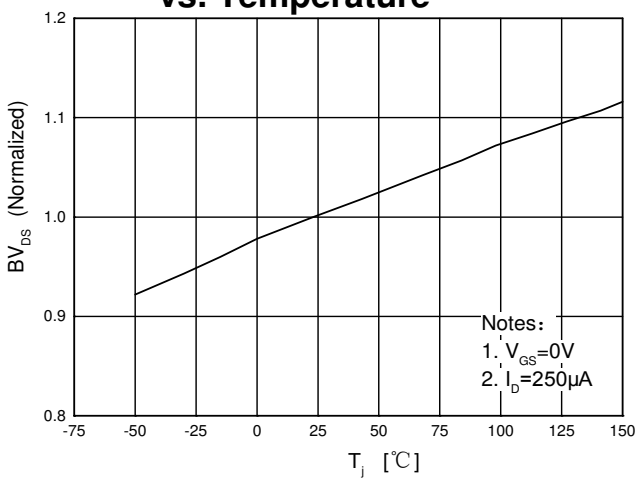

On-Resistance Variation vs. Temperature

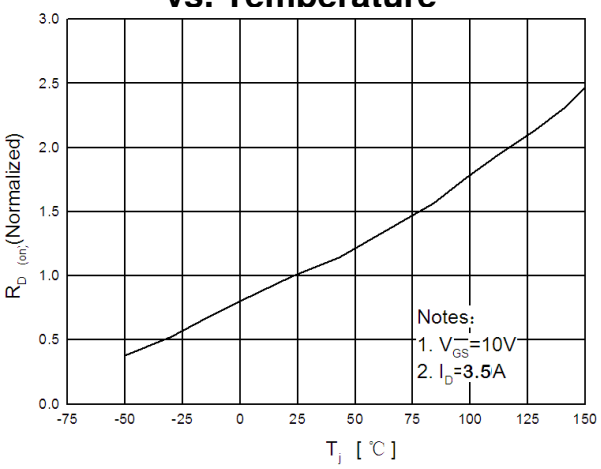

Soldering parameters

Reflow Condition		Pb-Free assembly (see as bellow)
Pre Heat	-Temperature Min ($T_{s(min)}$)	+150℃
	-Temperature Max($T_{s(max)}$)	+200℃
	-Time (Min to Max) (ts)	60-180 secs.
Average ramp up rate (Liquid us Temp (T_L) to peak)		3℃/sec. Max
$T_{s(max)}$ to T_L - Ramp-up Rate		3℃/sec. Max
Reflow	-Temperature(T_L)(Liquid us)	+217℃
	-Temperature(t_L)	60-150 secs.
Peak Temp (T_p)		+260(+0/-5)℃
Time within 5℃ of actual Peak Temp (t_p)		30 secs. Max
Ramp-down Rate		6℃/sec. Max
Time 25℃ to Peak Temp (T_P)		8 min. Max
Do not exceed		+260℃

FIG5: Reflow condition

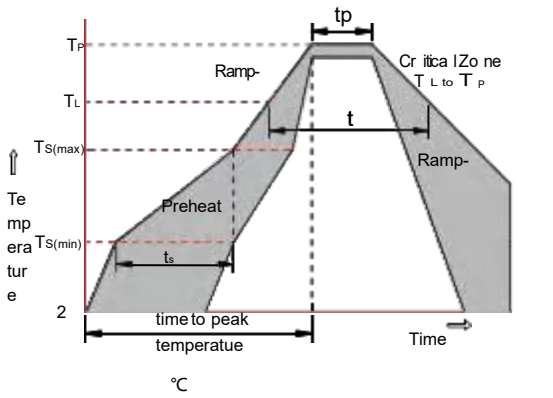

Package Dimensions & Suggested Pad Layout

TO-252

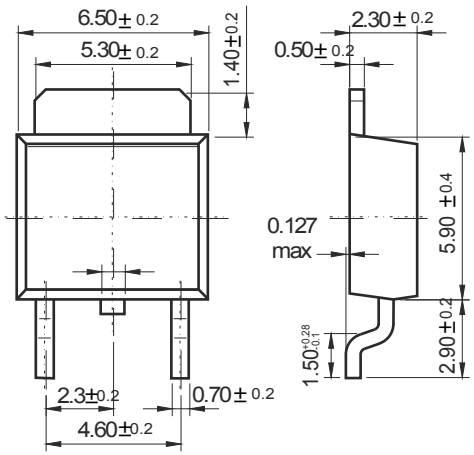

Dimensions in inches and (millimeters)

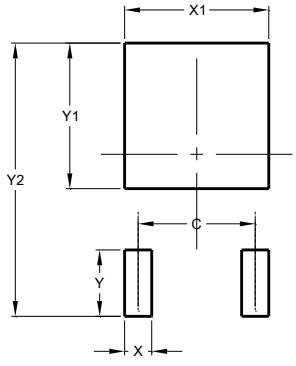

Dimensions	Value (in mm)
C	4.55
X	1.50
X1	5.80
Y	2.70
Y1	6.00
Y2	10.90

Tape & rell specification

Tape

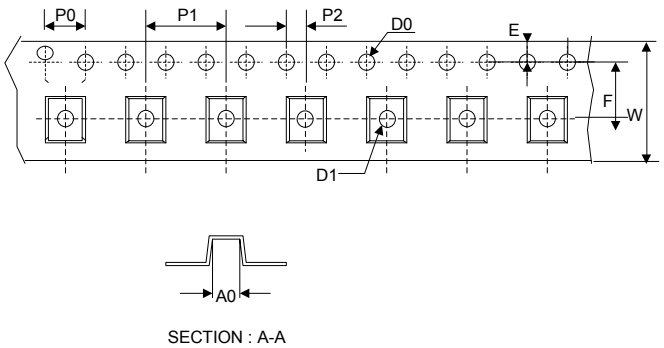

Symbol	Dimension (mm)
P0	4.00±0.20
P1	8.00±0.20
P2	2.00±0.20
D0	1.55±0.15
D1	1.55±0.20
E	1.75±0.20
F	7.50±0.20
W	16.00±0.20
A0	7.10±0.20
B0	10.50±0.20
K0	2.70±0.20
T	0.30±0.10

13” Reel

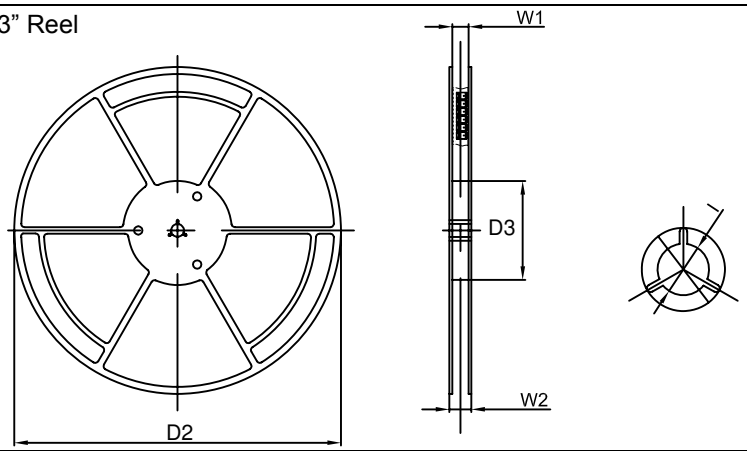

D2	330.0±5.0
D3	100.0±4.0
W1	20.0±5.0
W2	25.0±5.0
I	13.0±2.0

Quantity: 2500PCS

ENTEGRECİ

Bu belge www.entegreci.com üzerinden sunulmaktadır.

Elektronik komponent tedarikinde Entegreci

Entegreci, Eskişehir merkezli, Türkiye geneline satış yapan bir elektronik komponent mağazasıdır. Entegreler (IC), mikrodenetleyiciler, transistörler, diyotlar, pasif elemanlar, konnektörler, modüller ve geliştirme kartları tek adetten seri üretim adetlerine kadar satılır. Ürün sayfalarında güncel stok durumunu, fiyatı ve datasheet bağlantısını bulabilirsiniz.

Parça koduyla arama

Üretici parça numarasını yazın; stok ve fiyatı hemen görün.

www.entegreci.com

Ürün kategorileri

Entegreden kapasitöre tüm elektronik komponent kategorileri.

Kategorilere göz atın

Üreticiler

Aradığınız üreticinin ürünlerini tek sayfada inceleyin.

Üreticileri görün

Toplu alım ve teklif

Listede olmayan ya da yüksek adetli parçalar için teklif isteyin.

Teklif isteyin

www.entegreci.com | **destek@entegreci.com** | **0850 305 90 34**

Entegreci is an online electronic components store based in Türkiye. Search by manufacturer part number to see stock, prices and datasheets for integrated circuits, microcontrollers, transistors, passive components and connectors, or request a quote for parts that are not listed.

Bu sayfa Entegreci tarafından eklenmiştir. Belgenin önceki sayfaları asıl yayıncısına aittir ve içeriği değiştirilmemiştir; en güncel sürüm için belgenin yayıncısına başvurun.