15NM70-U2

Power MOSFET

15A, 700V N-CHANNEL SUPER-JUNCTION MOSFET

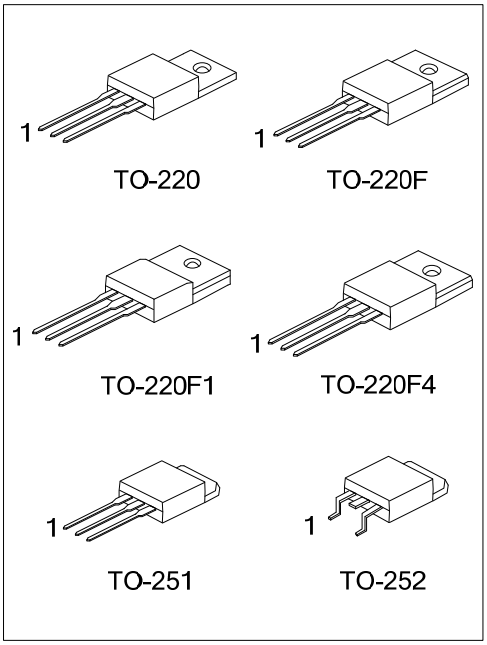

■ DESCRIPTION

The **UTC 15NM70-U2** is a Super Junction MOSFET Structure and is designed to have better characteristics, such as fast switching time, low gate charge, low on-state resistance and a high rugged avalanche characteristics. This power MOSFET is usually used at DC-DC, AC-DC converters for power applications.

■ FEATURES

* $R_{DS(ON)}$ < 0.45Ω @ V_{GS}=10V, I_D=7.5A
* By using Super Junction Structure
* Fast Switching
* With 100% Avalanche Tested

■ SYMBOL

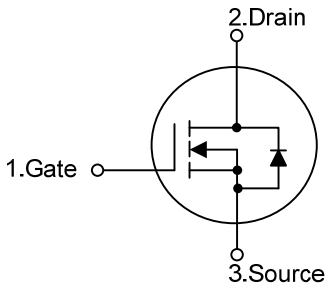

■ ORDERING INFORMATION

Ordering Number		Package	Pin Assignment			Packing
Lead Free	Halogen Free		1	2	3	
15NM70L-TA3-T	15NM70G-TA3-T	TO-220	G	D	S	Tube
15NM70L-TF3-T	15NM70G-TF3-T	TO-220F	G	D	S	Tube
15NM70L-TF1-T	15NM70G-TF1-T	TO-220F1	G	D	S	Tube
15NM70L-TF34-T	15NM70G-TF34-T	TO-220F4	G	D	S	Tube
15NM70L-TM3-T	15NM70G-TM3-T	TO-251	G	D	S	Tube
15NM70L-TN3-R	15NM70G-TN3-R	TO-252	G	D	S	Tape Reel

Note: Pin Assignment: G: Gate D: Drain S: Source

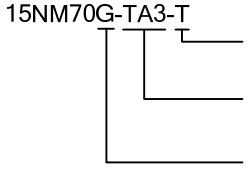

(1) T: Tube, R: Tape Reel

(2) TA3: TO-220, TF3: TO-220F, TF1: TO-220F1, TF34: TO-220F4, TM3: TO-251, TN3: TO-252

(3) G: Halogen Free and Lead Free, L: Lead Free

Copyright © 2017 Unisonic Technologies Co., Ltd

■ MARKING

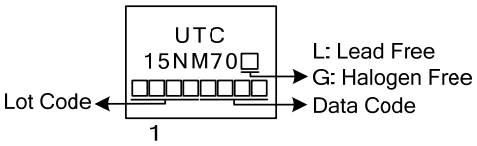

■ ABSOLUTE MAXIMUM RATINGS (T_C=25°C, unless otherwise specified)

PARAMETER		SYMBOL	RATINGS	UNIT
Drain-Source Voltage		V_{DSS}	700	V
Gate-Source Voltage		V_{GSS}	±30	V
Continuous Drain Current	Continuous	I_D	15	A
Pulsed Drain Current	Pulsed (Note 2)	I_{DM}	60	A
Avalanche Current (Note 3)		I_{AR}	2.9	A
Avalanche energy	Single Pulsed (Note 3)	E_{AS}	429	mJ
Peak Diode Recovery dv/dt (Note 4)		dv/dt	4.6	V/nS
Power Dissipation	TO-220	P_D	260	W
	TO-220F/TO-220F1 TO-220F4		54	W
	TO-251/TO-252		90	W
Junction Temperature		T_J	+150	°C
Storage Temperature Range		T_{STG}	-55 ~ +150	°C

Notes: 1. Absolute maximum ratings are those values beyond which the device could be permanently damaged. Absolute maximum ratings are stress ratings only and functional device operation is not implied.
2. Repetitive Rating: Pulse width limited by maximum junction temperature.
3. L=102mH, I_{AS}=2.9A, V_{DD}=50V, R_G=25Ω, Starting T_J = 25°C.
4. I_{SD} ≤15A, di/dt ≤200A/μs, V_{DD} ≤ $V_{(BR)DSS}$, T_J = 25°C.

■ THERMAL DATA

PARAMETER		SYMBOL	RATINGS	UNIT
Junction to Ambient	TO-220/TO-220F TO-220F1/TO-220F4	θ_{JA}	62.5	°C/W
	TO-251/TO-252		110	°C/W
Junction to Case	TO-220	θ_{JC}	0.48	°C/W
	TO-220F/TO-220F1 TO-220F4		2.31	°C/W
	TO-251/TO-252		1.39	°C/W

■ ELECTRICAL CHARACTERISTICS (T_J =25°C, unless otherwise specified)

PARAMETER		SYMBOL	TEST CONDITIONS	MIN	TYP	MAX	UNIT
OFF CHARACTERISTICS							
Drain-Source Breakdown Voltage		BV_{DSS}	V_{GS}=0V, I_D=250μA	700			V
Drain-Source Leakage Current		I_{DSS}	V_{DS}=700V, V_{GS}=0V			10	μA
Gate-Source Leakage Current	Forward	I_{GSS}	V_{DS}=0V ,V_{GS}=+30V			+100	nA
	Reverse		V_{DS}=0V ,V_{GS}=-30V			-100	nA
ON CHARACTERISTICS							
Gate Threshold Voltage		$V_{GS(TH)}$	V_{DS}= V_{GS}, I_D=250μA	2.5		4.5	V
Drain-Source On-State Resistance		$R_{DS(ON)}$	V_{GS}=10V, I_D=7.5A			0.45	Ω
DYNAMIC PARAMETERS							
Input Capacitance		C_{ISS}	V_{GS}=0V, V_{DS}=25V, f=1.0MHz		1064		pF
Output Capacitance		C_{OSS}			543		pF
Reverse Transfer Capacitance		C_{RSS}			37		pF
SWITCHING PARAMETERS							
Total Gate Charge (Note 1)		Q_G	V_{DS}=50V, V_{GS}=10V, I_D=1.3A , I_G=100μA (Note 1, 2)		95		nC
Gate to Source Charge		Q_{GS}			7.8		nC
Gate to Drain Charge		Q_{GD}			26		nC
Turn-on Delay Time (Note 1)		$t_{D(ON)}$	V_{DD}=30V, V_{GS}=10V, I_D=0.5A, R_G=25Ω (Note 1, 2)		62		ns
Rise Time		t_R			132		ns
Turn-off Delay Time		$t_{D(OFF)}$			240		ns
Fall-Time		t_F			145		ns
SOURCE- DRAIN DIODE RATINGS AND CHARACTERISTICS							
Maximum Body-Diode Pulsed Current		I_S				15	A
Drain-Source Diode Forward Voltage (Note 1)		I_{SM}				60	A
Maximum Body-Diode Continuous Current		V_{SD}	I_S =15A, V_{GS}=0V			1.4	V
Reverse Recovery Time (Note 1)		t_{rr}	I_S =15A, V_{GS}=0V, dI_F/dt=100A/μs		395		ns
Reverse Recovery Charge		Q_{rr}			5.92		μC

Note: 1. Pulse Test : Pulse width ≤ 300μs, Duty cycle ≤ 2%
2. Essentially independent of operating temperature

■ TEST CIRCUITS AND WAVEFORMS

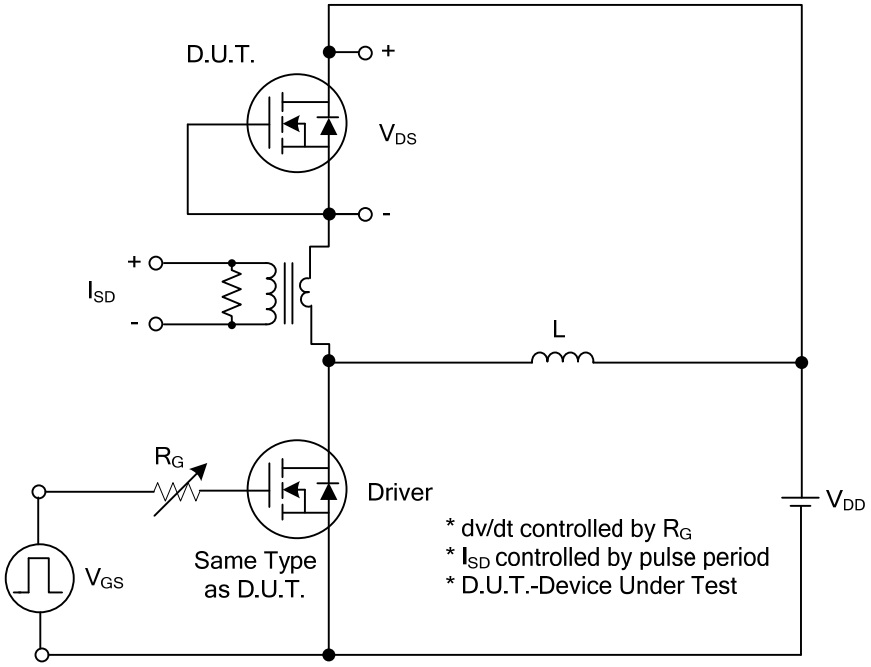

Peak Diode Recovery dv/dt Test Circuit

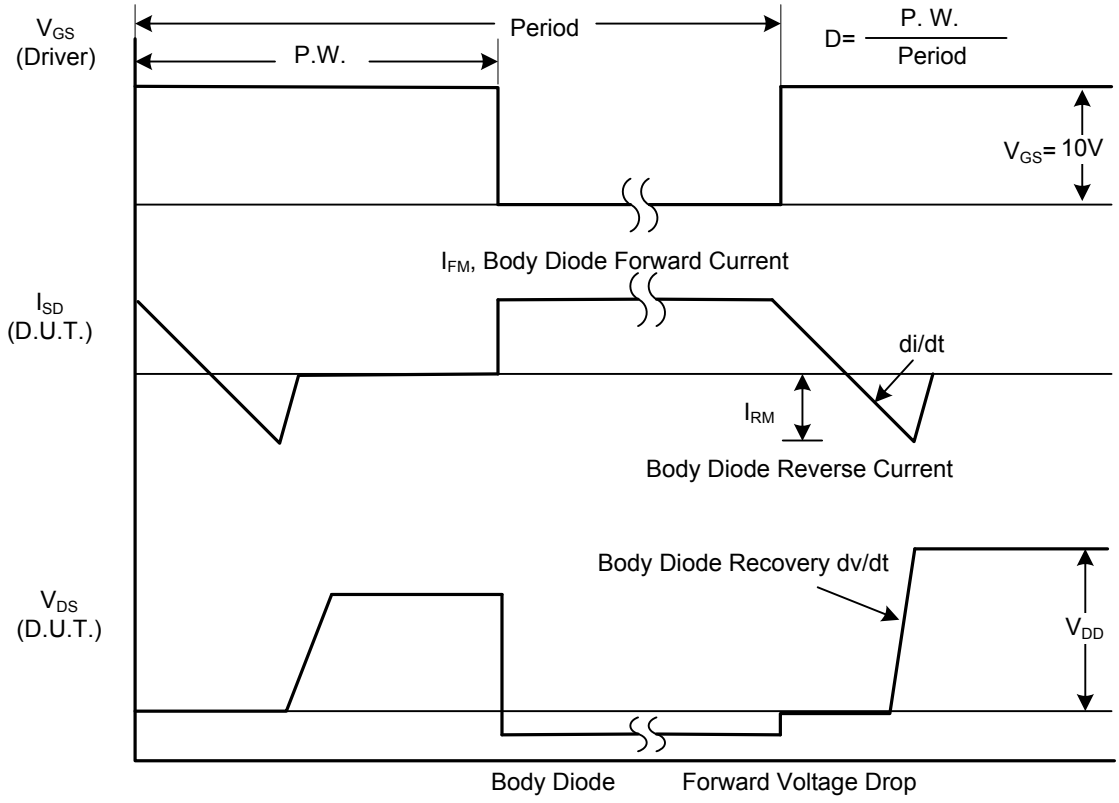

Peak Diode Recovery dv/dt Waveforms

■ TEST CIRCUITS AND WAVEFORMS (Cont.)

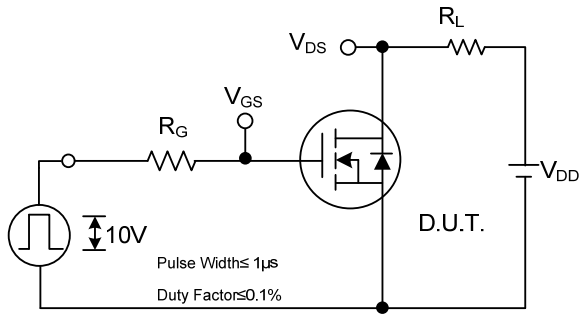

Switching Test Circuit

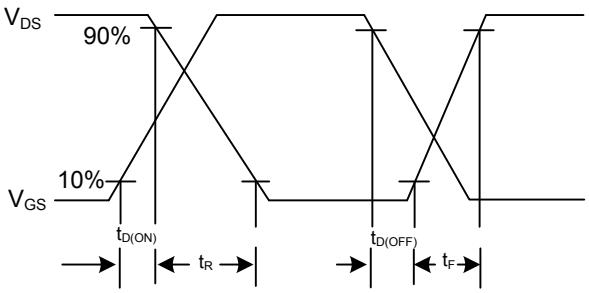

Switching Waveforms

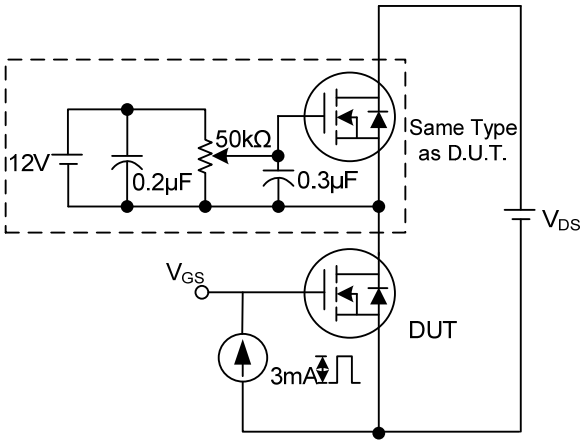

Gate Charge Test Circuit

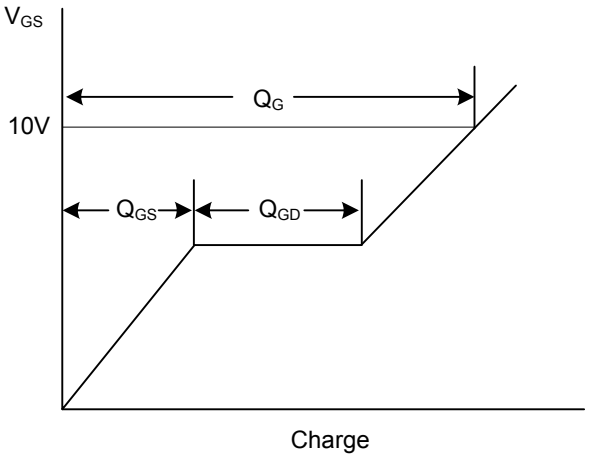

Gate Charge Waveform

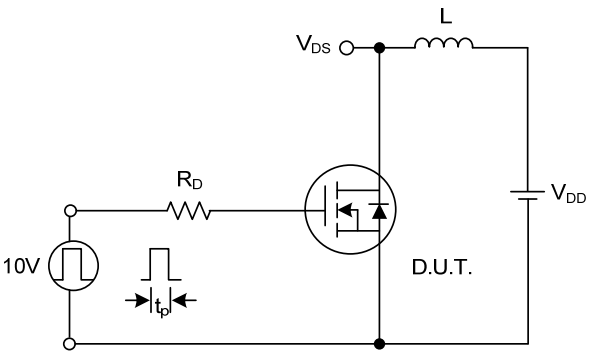

Unclamped Inductive Switching Test Circuit

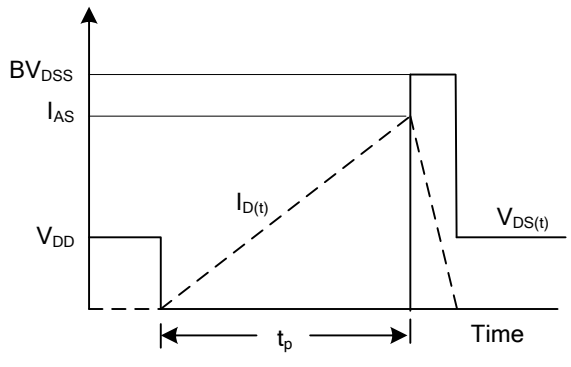

Unclamped Inductive Switching Waveforms

UTC assumes no responsibility for equipment failures that result from using products at values that exceed, even momentarily, rated values (such as maximum ratings, operating condition ranges, or other parameters) listed in products specifications of any and all UTC products described or contained herein. UTC products are not designed for use in life support appliances, devices or systems where malfunction of these products can be reasonably expected to result in personal injury. Reproduction in whole or in part is prohibited without the prior written consent of the copyright owner. The information presented in this document does not form part of any quotation or contract, is believed to be accurate and reliable and may be changed without notice.

ENTEGRECİ

Bu belge www.entegreci.com üzerinden sunulmaktadır.

Elektronik komponent tedarikinde Entegreci

Entegreci, Eskişehir merkezli, Türkiye geneline satış yapan bir elektronik komponent mağazasıdır. Entegreler (IC), mikrodenetleyiciler, transistörler, diyotlar, pasif elemanlar, konnektörler, modüller ve geliştirme kartları tek adetten seri üretim adetlerine kadar satılır. Ürün sayfalarında güncel stok durumunu, fiyatı ve datasheet bağlantısını bulabilirsiniz.

Parça koduyla arama

Üretici parça numarasını yazın; stok ve fiyatı hemen görün.

www.entegreci.com

Ürün kategorileri

Entegreden kapasitöre tüm elektronik komponent kategorileri.

Kategorilere göz atın

Üreticiler

Aradığınız üreticinin ürünlerini tek sayfada inceleyin.

Üreticileri görün

Toplu alım ve teklif

Listede olmayan ya da yüksek adetli parçalar için teklif isteyin.

Teklif isteyin

www.entegreci.com | **destek@entegreci.com** | **0850 305 90 34**

Entegreci is an online electronic components store based in Türkiye. Search by manufacturer part number to see stock, prices and datasheets for integrated circuits, microcontrollers, transistors, passive components and connectors, or request a quote for parts that are not listed.

Bu sayfa Entegreci tarafından eklenmiştir. Belgenin önceki sayfaları asıl yayıncısına aittir ve içeriği değiştirilmemiştir; en güncel sürüm için belgenin yayıncısına başvurun.