15A, 650V N-CHANNEL POWER MOSFET

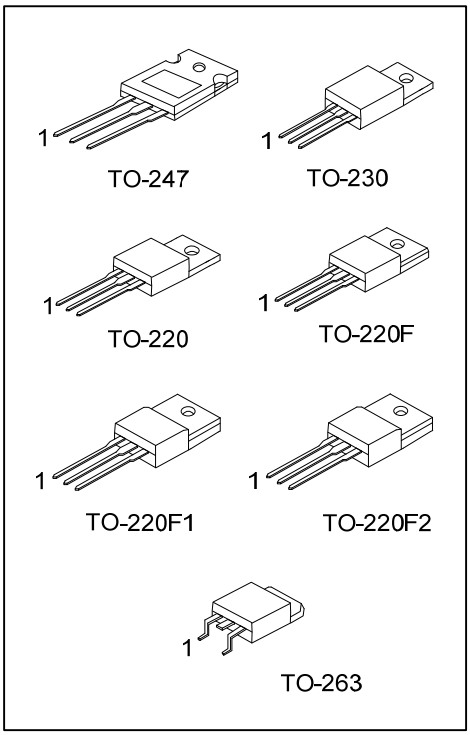

■ DESCRIPTION

The UTC **15N65** is an N-channel mode power MOSFET using UTC's advanced technology to provide costumers with planar stripe and DMOS technology. This technology is specialized in allowing a minimum on-state resistance and superior switching performance. It also can withstand high energy pulse in the avalanche and commutation mode.

The UTC **15N65** is universally applied in active power factor correction and high efficient switched mode power supplies.

■ FEATURES

* $R_{DS(ON)}$ < 0.65Ω @ V_{GS}=10V, I_D=7.5A
* High switching speed
* Improved dv/dt capability

■ SYMBOL

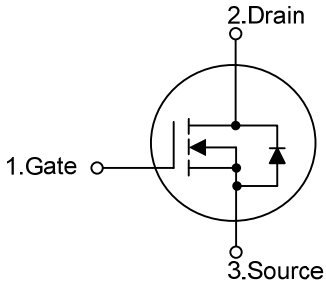

■ ORDERING INFORMATION

Ordering Number		Package	Pin Assignment			Packing
Lead Free	Halogen Free		1	2	3	
15N65L-T47-T	15N65G-T47-T	TO-247	G	D	S	Tube
15N65L-TA3-T	15N65G-TA3-T	TO-220	G	D	S	Tube
15N65L-TC3-T	15N65G-TC3-T	TO-230	G	D	S	Tube
15N65L-TF1-T	15N65G-TF1-T	TO-220F1	G	D	S	Tube
15N65L-TF2-T	15N65G-TF2-T	TO-220F2	G	D	S	Tube
15N65L-TF3-T	15N65G-TF3-T	TO-220F	G	D	S	Tube
15N65L-TQ2-T	15N65G-TQ2-T	TO-263	G	D	S	Tube
15N65L-TQ2-R	15N65G-TQ2-R	TO-263	G	D	S	Tape Reel

Note: Pin Assignment: G: Gate D: Drain S: Source

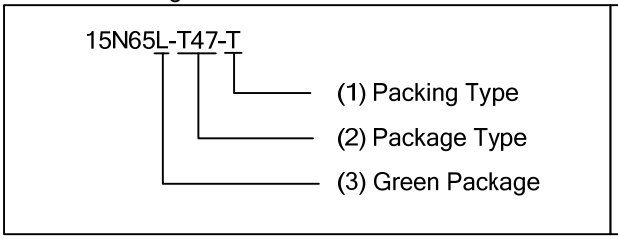

(1) T: Tube, R: Tape Reel
(2) T47: TO-247, TA3: TO-220, TC3: TO-230, TF1: TO-220F1, TF2: TO-220F2, TF3: TO-220F, TQ2: TO-263
(3) L: Lead Free, G: Halogen Free and Lead Free

Copyright © 2016 Unisonic Technologies Co., Ltd

■ MARKING

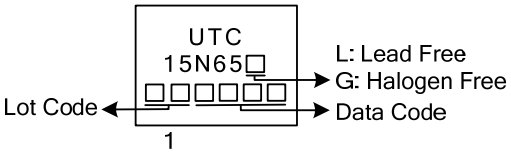

■ ABSOLUTE MAXIMUM RATINGS (T_C=25°C, unless otherwise specified)

PARAMETER		SYMBOL	RATINGS	UNIT
Drain to Source Voltage		V_{DSS}	650	V
Gate to Source Voltage		V_{GSS}	±30	V
Continuous Drain Current	Continuous	I_D	15	A
	Pulsed (Note 2)	I_{DM}	60	A
Avalanche Current (Note 2)		I_{AR}	6.4	A
Avalanche Energy	Single Pulsed (Note 3)	E_{AS}	205	mJ
Peak Diode Recovery dv/dt (Note 4)		dv/dt	2.45	V/ns
Power Dissipation	TO-220/TO-230 TO-263	P_D	250	W
	TO-220F		54	W
	TO-220F1/TO-220F2		52	W
	TO-247		312	W
Junction Temperature		T_J	+150	°C
Storage Temperature		T_{STG}	-55 ~ +150	°C

Notes: 1. Absolute maximum ratings are those values beyond which the device could be permanently damaged. Absolute maximum ratings are stress ratings only and functional device operation is not implied.
2. Repetitive Rating : Pulse width limited by maximum junction temperature.
3. L=10mH, I_{AS}=6.4A, V_{DD}= 50V, R_G=25Ω, Starting T_J=25°C
4. I_{SD} ≤15A, di/dt ≤200A/μs, V_{DD} ≤BV_{DSS}, Starting T_J=25°C.

■ THERMAL DATA

PARAMETER		SYMBOL	RATINGS	UNIT
Junction to Ambient	TO-220/TO-220F TO-220F1/TO-220F2 TO-230/TO-263	θ_{JA}	62.5	°C/W
	TO-247		40	°C/W
Junction to Case	TO-220/TO-230 TO-263	θ_{JC}	0.5	°C/W
	TO-220F		2.3	°C/W
	TO-220F1/TO-220F2		2.4	°C/W
	TO-247		0.4	°C/W

■ ELECTRICAL CHARACTERISTICS (T_J =25°C, unless otherwise specified)

PARAMETER		SYMBOL	TEST CONDITIONS	MIN	TYP	MAX	UNIT
OFF CHARACTERISTICS							
Drain-Source Breakdown Voltage		BV_{DSS}	V_{GS}=0V, I_D=250μA	650			V
Drain-Source Leakage Current		I_{DSS}	V_{DS}=650V, V_{GS}=0V			1	μA
Gate- Source Leakage Current	Forward	I_{GSS}	V_{GS}=+30V, V_{DS}=0V			+100	nA
	Reverse		V_{GS}=-30V, V_{DS}=0V			-100	nA
ON CHARACTERISTICS							
Gate Threshold Voltage		$V_{GS(TH)}$	V_{DS}=V_{GS}, I_D=250μA	2.0		4.0	V
Drain-Source On-State Resistance		$R_{DS(ON)}$	V_{GS}=10V, I_D=7.5A			0.65	Ω
DYNAMIC PARAMETERS							
Input Capacitance		C_{ISS}	V_{DS}=25V,V_{GS}=0V,f=1.0MHz		2600		pF
Output Capacitance		C_{OSS}			260		pF
Reverse Transfer Capacitance		C_{RSS}			22		pF
SWITCHING PARAMETERS							
Total Gate Charge (Note 1)		Q_G	V_{DS}=50V, V_{GS}=10V, I_D=1.3A, I_G = 100mA (Note 1, 2)		155		nC
Gate-Source Charge		Q_{GS}			14		nC
Gate-Drain Charge		Q_{GD}			28		nC
Turn-ON Delay Time (Note 1)		$t_{D(ON)}$	V_{DD} =30V, V_{GS}=10V, I_D =0.5A, R_G=25Ω (Note 1, 2)		105		ns
Turn-ON Rise Time		t_R			115		ns
Turn-OFF Delay Time		$t_{D(OFF)}$			600		ns
Turn-OFF Fall Time		t_F			120		ns
SOURCE- DRAIN DIODE RATINGS AND CHARACTERISTICS							
Maximum Body-Diode Continuous Current		I_S				15	A
Maximum Body-Diode Pulsed Current		I_{SM}				60	A
Drain-Source Diode Forward Voltage (Note 1)		V_{SD}	I_S =15A, V_{GS}=0V			1.4	V
Body Diode Reverse Recovery Time (Note 1)		t_{rr}	I_S =15A, V_{GS}=0V, dI_F/dt=100A/μs		510		ns
Body Diode Reverse Recovery Charge		Q_{rr}			8.2		μC

Notes: 1. Pulse Test : Pulse width ≤ 300μs, Duty cycle ≤ 2%.
2. Essentially independent of operating temperature.

■ TEST CIRCUITS AND WAVEFORMS

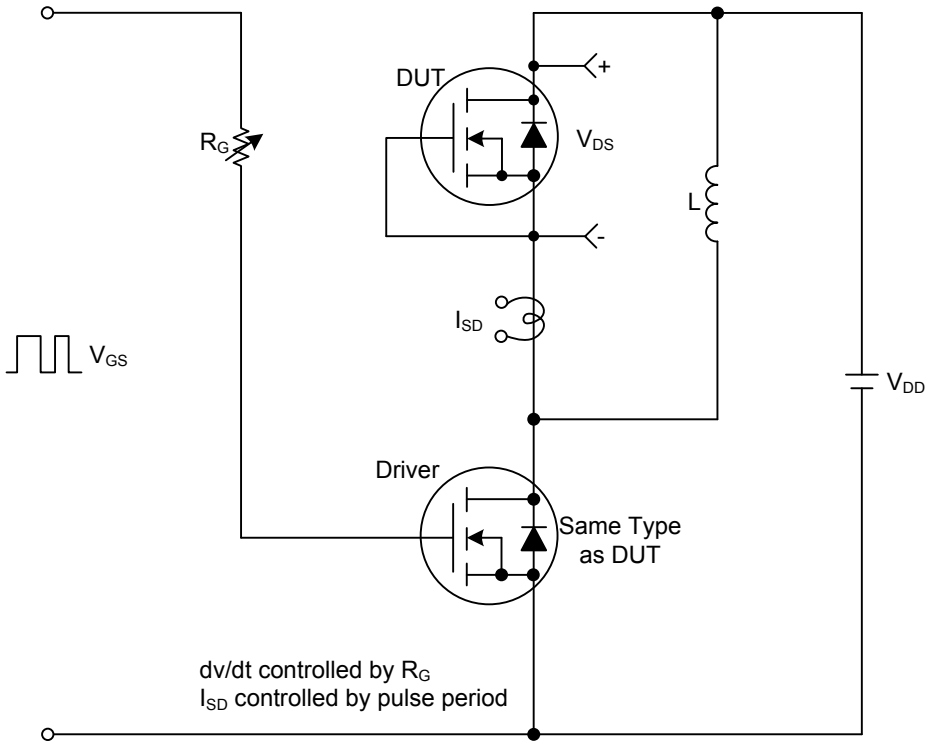

Peak Diode Recovery dv/dt Test Circuit & Waveforms

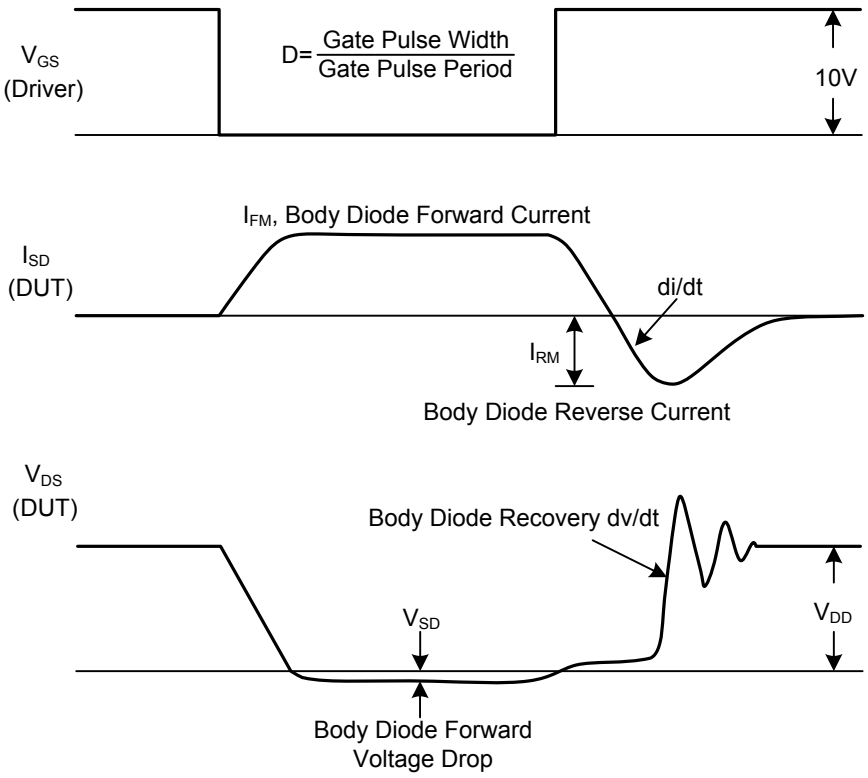

■ TEST CIRCUITS AND WAVEFORMS(Cont.)

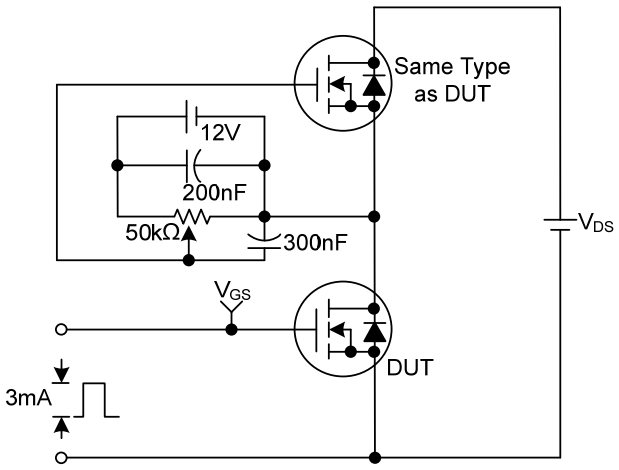

Gate Charge Test Circuit

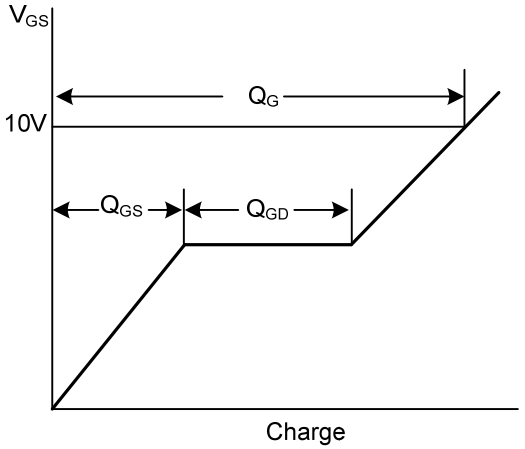

Gate Charge Waveforms

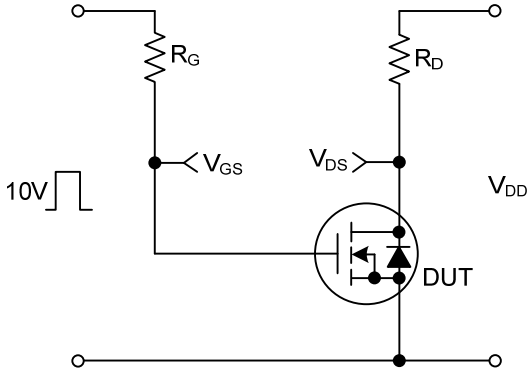

Resistive Switching Test Circuit

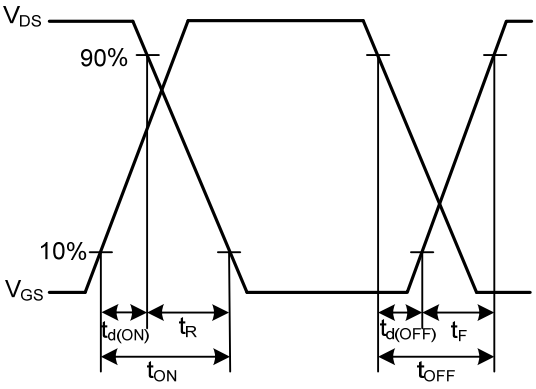

Resistive Switching Waveforms

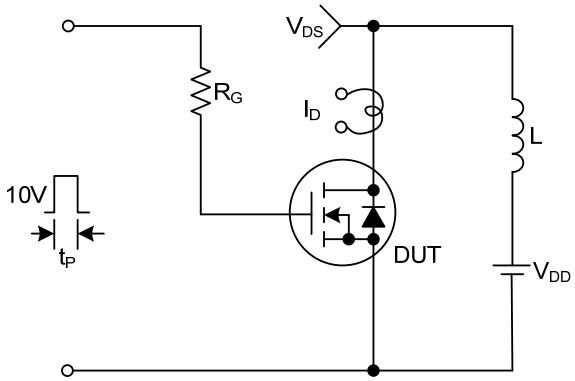

Unclamped Inductive Switching Test Circuit

$$E_{AS}=\frac{1}{2}LI_{AS}^{2}\frac{BV_{DSS}}{BV_{DSS}-V_{DD}}$$

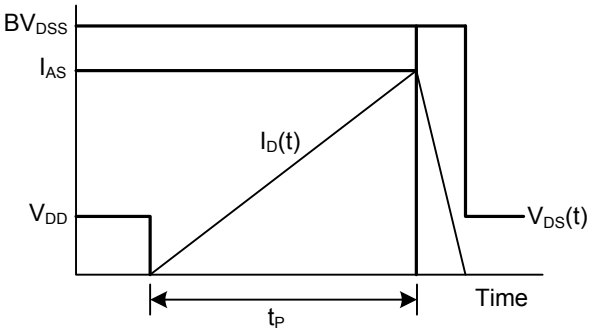

Unclamped Inductive Switching Waveforms

■ TYPICAL CHARACTERISTICS

Drain Current vs. Drain-Source Breakdown Voltage

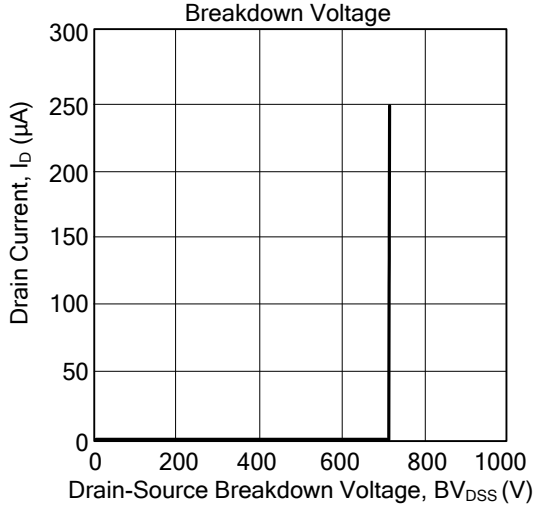

Drain Current vs. Gate Threshold Voltage

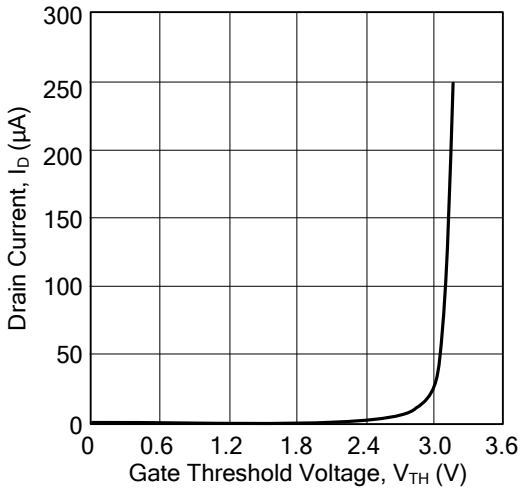

Drain-Source On-State Resistance Characteristics

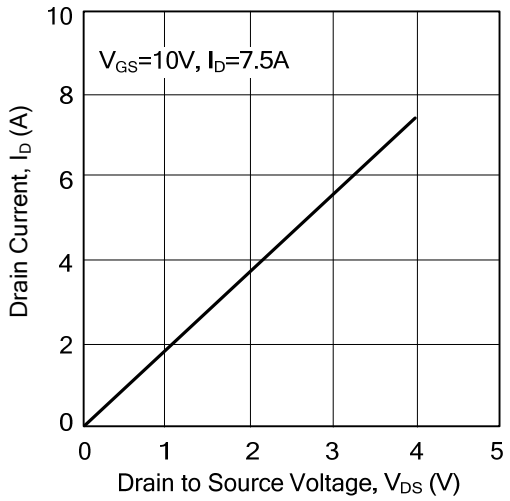

Body-Diode Continuous Current vs. Source to Drain Voltage

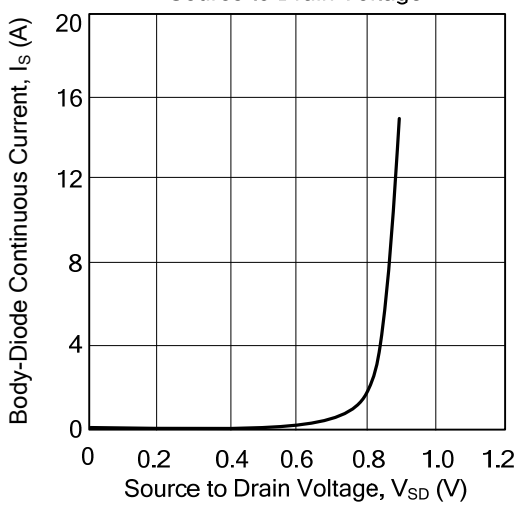

UTC assumes no responsibility for equipment failures that result from using products at values that exceed, even momentarily, rated values (such as maximum ratings, operating condition ranges, or other parameters) listed in products specifications of any and all UTC products described or contained herein. UTC products are not designed for use in life support appliances, devices or systems where malfunction of these products can be reasonably expected to result in personal injury. Reproduction in whole or in part is prohibited without the prior written consent of the copyright owner. The information presented in this document does not form part of any quotation or contract, is believed to be accurate and reliable and may be changed without notice.

ENTEGRECİ

Bu belge www.entegreci.com üzerinden sunulmaktadır.

Elektronik komponent tedarikinde Entegreci

Entegreci, Eskişehir merkezli, Türkiye geneline satış yapan bir elektronik komponent mağazasıdır. Entegreler (IC), mikrodenetleyiciler, transistörler, diyotlar, pasif elemanlar, konnektörler, modüller ve geliştirme kartları tek adetten seri üretim adetlerine kadar satılır. Ürün sayfalarında güncel stok durumunu, fiyatı ve datasheet bağlantısını bulabilirsiniz.

Parça koduyla arama

Üretici parça numarasını yazın; stok ve fiyatı hemen görün.

www.entegreci.com

Ürün kategorileri

Entegreden kapasitöre tüm elektronik komponent kategorileri.

Kategorilere göz atın

Üreticiler

Aradığınız üreticinin ürünlerini tek sayfada inceleyin.

Üreticileri görün

Toplu alım ve teklif

Listede olmayan ya da yüksek adetli parçalar için teklif isteyin.

Teklif isteyin

www.entegreci.com | **destek@entegreci.com** | **0850 305 90 34**

Entegreci is an online electronic components store based in Türkiye. Search by manufacturer part number to see stock, prices and datasheets for integrated circuits, microcontrollers, transistors, passive components and connectors, or request a quote for parts that are not listed.

Bu sayfa Entegreci tarafından eklenmiştir. Belgenin önceki sayfaları asıl yayıncısına aittir ve içeriği değiştirilmemiştir; en güncel sürüm için belgenin yayıncısına başvurun.