14.7A, 100V (D-S) N-CHANNEL POWER MOSFET

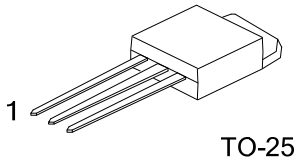

TO-251

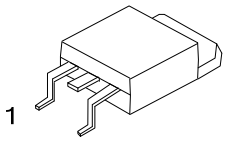

TO-252

■ DESCRIPTION

The UTC **15N10** is an N-Channel enhancement MOSFET, it uses UTC's advanced technology to provide customers with a minimum on-state resistance, high switching speed and low gate charge.

The UTC **15N10** is suitable for high efficiency switching DC/DC converter, LCD display inverter and load switch.

■ FEATURES

* $R_{DS(ON)}$=0.08Ω @V_{GS}=10V,I_D=8A
* Low gate charge (Typ=24nC)
* Low C_{RSS} (Typ=23pF)
* High switching speed

■ SYMBOL

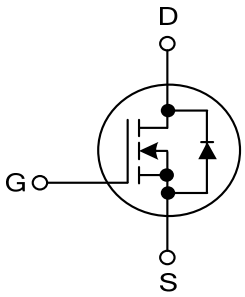

■ ORDERING INFORMATION

Ordering Number		Package	Pin Assignment			Packing
Lead Free	Halogen Free		1	2	3	
15N10L-TM3-T	15N10G-TM3-T	TO-251	G	D	S	Tube
15N10L-TN3-R	15N10G-TN3-R	TO-252	G	D	S	Tape Reel

Note: Pin Assignment: G: Gate D: Drain S: Source

15N10L-TM3-T (1)Packing Type (2)Package Type (3)Green Package	(1) T: Tube, R: Tape Reel (2) TM3: TO-251, TN3: TO-252 (3) L: Lead Free, G: Halogen Free and Lead Free

■ MARKING

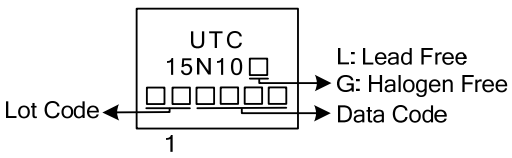

Copyright © 2016 Unisonic Technologies Co., Ltd

■ ABSOLUTE MAXIMUM RATINGS (T_A=25°C, unless otherwise noted)

PARAMETER			SYMBOL	RATINGS	UNIT
Drain-Source Voltage			V_{DSS}	100	V
Gate-Source Voltage			V_{GSS}	±20	V
Drain Current	Continuous	T_C=25°C, T_J=150°C	I_D	14.7	A
		T_C=70°C, T_J=150°C		13.6	A
	Pulsed		I_{DM}	59	A
Power Dissipation		T_C=25°C	P_D	34.7	W
		T_C=70°C		22.2	W
Operating Junction Temperature			T_J	-55 ~ +150	°C

Note: Absolute maximum ratings are those values beyond which the device could be permanently damaged. Absolute maximum ratings are stress ratings only and functional device operation is not implied.

■ THERMAL CHARACTERISTICS (T_A=25°C, unless otherwise noted)

PARAMETER	SYMBOL	RATINGS	UNIT
Junction to Case (Note)	θ_{JC}	3.6	°C/W

Note: The device mounted on 1in^2 FR4 board with 2 oz copper.

■ ELECTRICAL CHARACTERISTICS (T_A=25°C, unless otherwise specified)

PARAMETER	SYMBOL	TEST CONDITIONS	MIN	TYP	MAX	UNIT
OFF CHARACTERISTICS						
Drain-Source Breakdown Voltage	BV_{DSS}	I_D=250μA, V_{GS}=0V	100			V
Drain-Source Leakage Current	I_{DSS}	V_{DS}=80V, V_{GS}=0V			1	μA
Gate-Source Leakage Current	I_{GSS}	V_{GS}=+20V, V_{DS}=0V			+100	nA
		V_{GS}=-20V, V_{DS}=0V			-100	nA
ON CHARACTERISTICS						
Gate Threshold Voltage	$V_{GS(TH)}$	V_{DS}=V_{GS}, I_D=250μA	1.0		3.0	V
Drain-Source On-State Resistance (Note)	$R_{DS(ON)}$	V_{GS}=10V, I_D=8A		80	100	mΩ
DYNAMIC PARAMETERS						
Input Capacitance	C_{ISS}	V_{GS}=0V, V_{DS}=15V, f=1MHz		890		pF
Output Capacitance	C_{OSS}			58		pF
Reverse Transfer Capacitance	C_{RSS}			23		pF
SWITCHING PARAMETERS						
Total Gate Charge	Q_G	V_{GS}=10V, V_{DS}=80V, I_D=10A		24		nC
Total Gate Charge	Q_G	V_{GS}=4.5V, V_{DS}=80V, I_D=10A		13		nC
Gate to Source Charge	Q_{GS}			4.6		nC
Gate to Drain Charge	Q_{GD}			7.6		nC
Gate-Resistance	R_G	V_{DS}=0V, V_{GS}=0V, f=1MHz		0.9		Ω
Turn-ON Delay Time	$t_{D(ON)}$	V_{DS}=50V, R_L=5Ω, V_{GEN}=10V, R_G=1Ω		14		ns
Rise Time	t_R			33		ns
Turn-OFF Delay Time	$t_{D(OFF)}$			39		ns
Fall-Time	t_F			5		ns
SOURCE- DRAIN DIODE RATINGS AND CHARACTERISTICS						
Drain-Source Diode Forward Voltage	V_{SD}	I_S=8A, V_{GS}=0V		0.9	1.2	V

Note: Pulse test: pulse width≤300us, duty cycle≤2%, Guaranteed by design, not subject to production testing.

■ TEST CIRCUITS AND WAVEFORMS

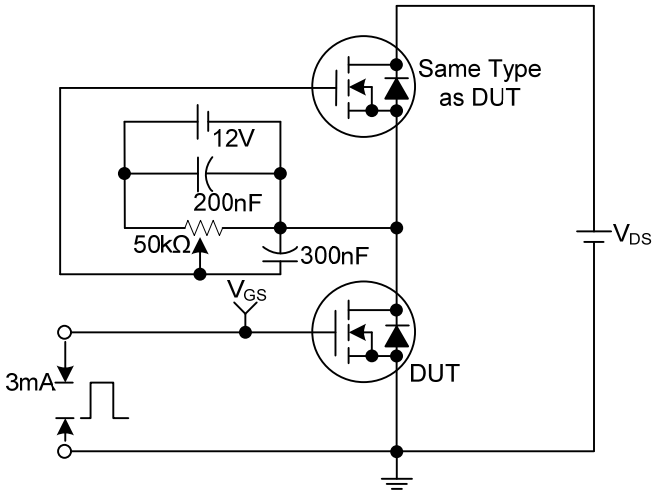

Gate Charge Test Circuit

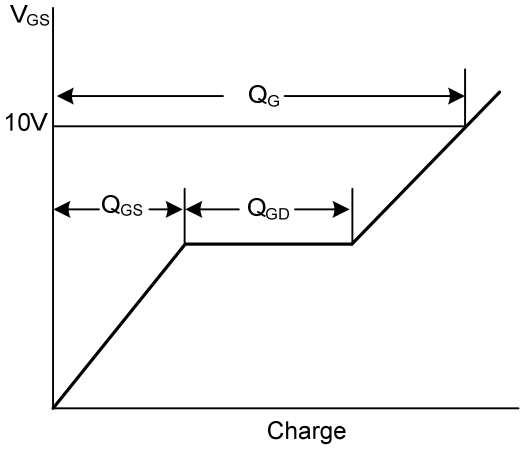

Gate Charge Waveforms

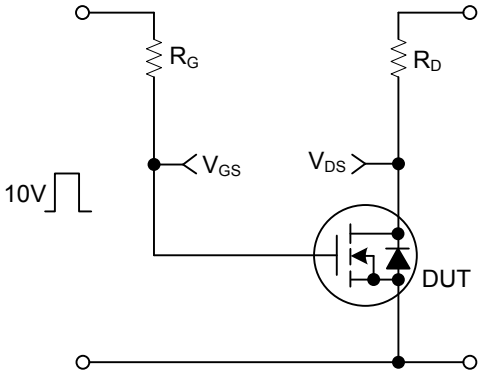

Resistive Switching Test Circuit

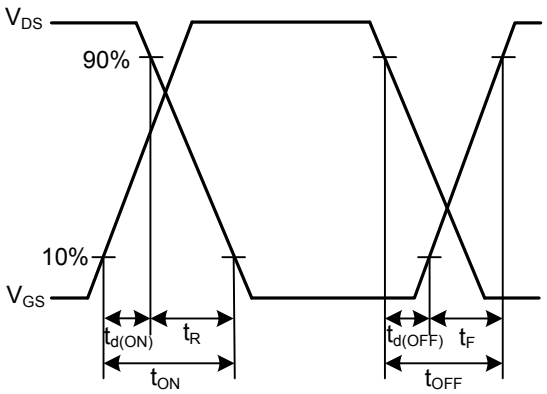

Resistive Switching Waveforms

■ TEST CIRCUITS AND WAVEFORMS

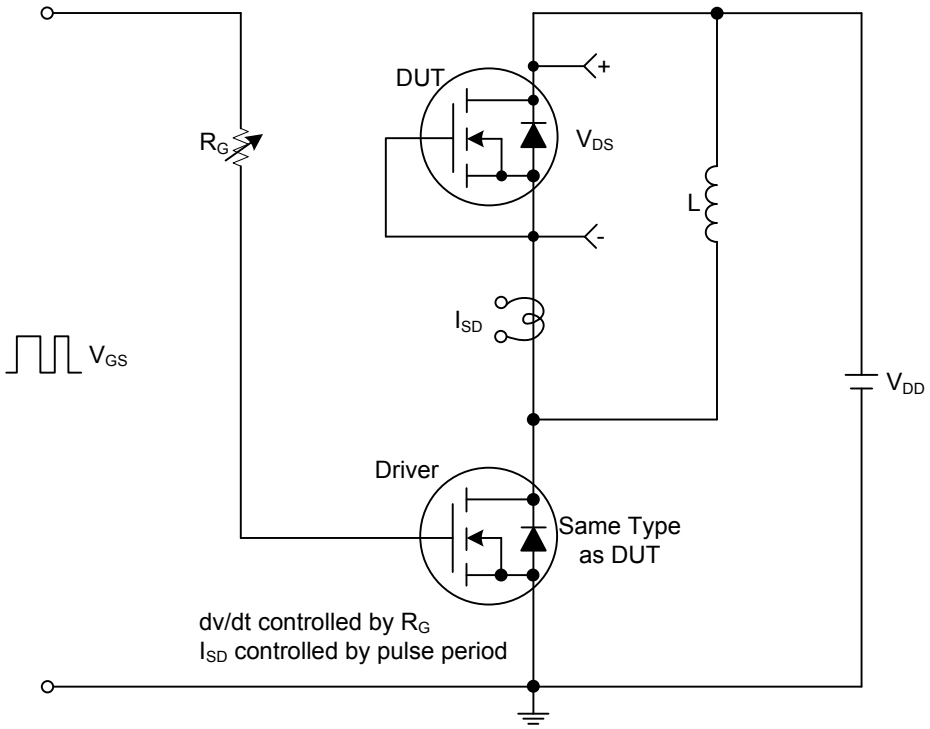

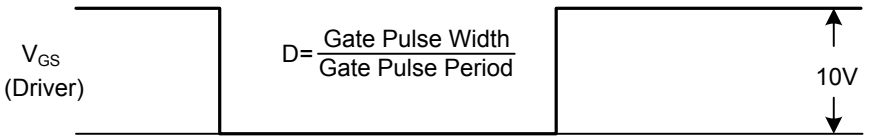

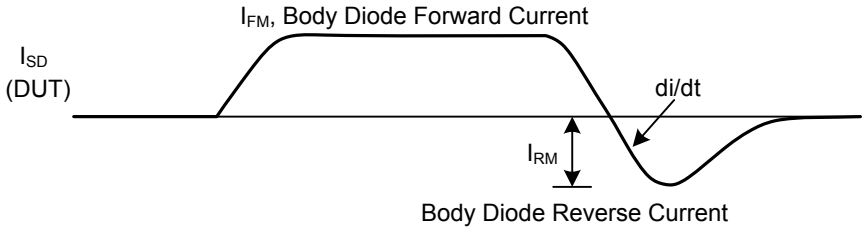

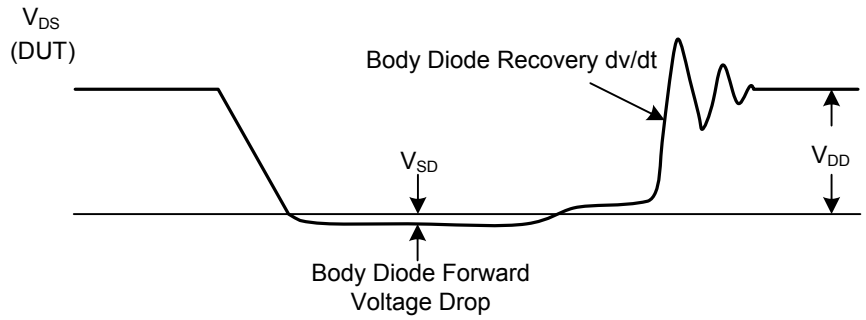

Peak Diode Recovery dv/dt Test Circuit and Waveforms

■ TYPICAL CHARACTERISTICS

Drain Current vs. Drain-Source Breakdown Voltage

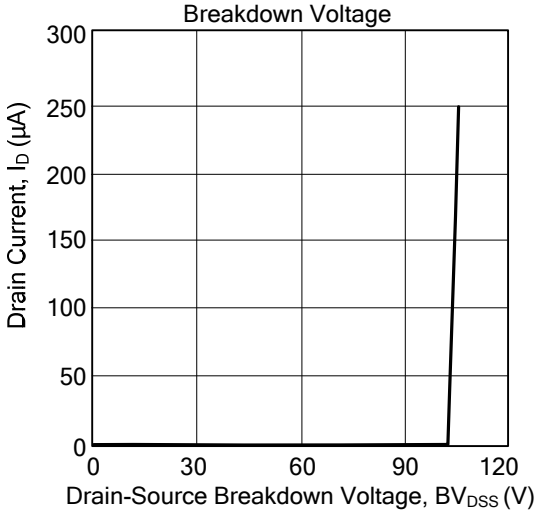

Drain Current vs. Gate Threshold Voltage

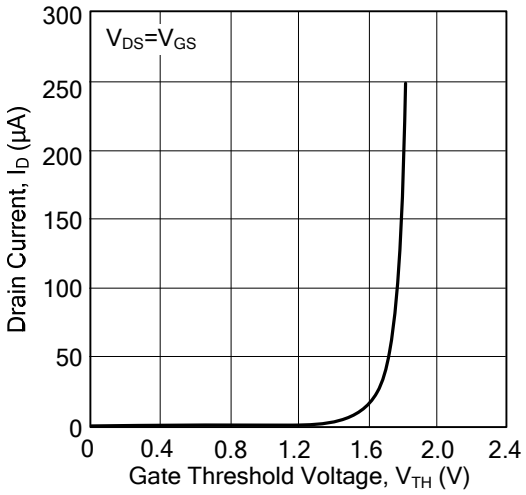

Drain-Source On-State Resistance Characteristics

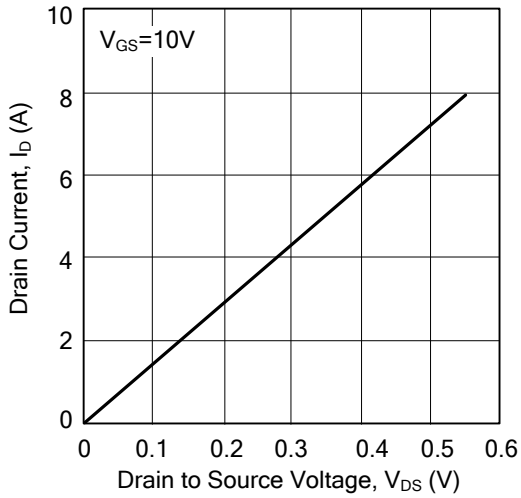

Drain Current vs. Source to Drain Voltage

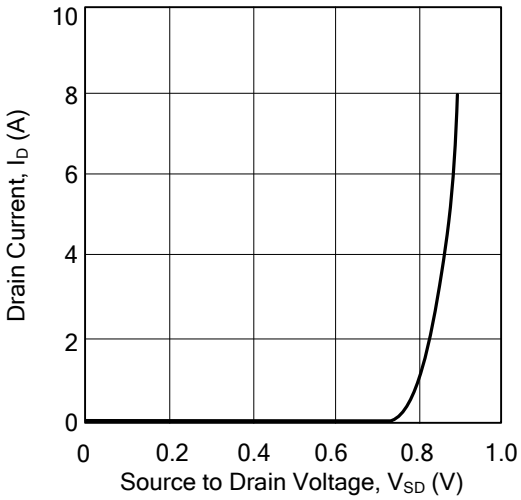

UTC assumes no responsibility for equipment failures that result from using products at values that exceed, even momentarily, rated values (such as maximum ratings, operating condition ranges, or other parameters) listed in products specifications of any and all UTC products described or contained herein. UTC products are not designed for use in life support appliances, devices or systems where malfunction of these products can be reasonably expected to result in personal injury. Reproduction in whole or in part is prohibited without the prior written consent of the copyright owner. The information presented in this document does not form part of any quotation or contract, is believed to be accurate and reliable and may be changed without notice.

ENTEGRECİ

Bu belge www.entegreci.com üzerinden sunulmaktadır.

Elektronik komponent tedarikinde Entegreci

Entegreci, Eskişehir merkezli, Türkiye geneline satış yapan bir elektronik komponent mağazasıdır. Entegreler (IC), mikrodenetleyiciler, transistörler, diyotlar, pasif elemanlar, konnektörler, modüller ve geliştirme kartları tek adetten seri üretim adetlerine kadar satılır. Ürün sayfalarında güncel stok durumunu, fiyatı ve datasheet bağlantısını bulabilirsiniz.

Parça koduyla arama

Üretici parça numarasını yazın; stok ve fiyatı hemen görün.

www.entegreci.com

Ürün kategorileri

Entegreden kapasitöre tüm elektronik komponent kategorileri.

Kategorilere göz atın

Üreticiler

Aradığınız üreticinin ürünlerini tek sayfada inceleyin.

Üreticileri görün

Toplu alım ve teklif

Listede olmayan ya da yüksek adetli parçalar için teklif isteyin.

Teklif isteyin

www.entegreci.com | **destek@entegreci.com** | **0850 305 90 34**

Entegreci is an online electronic components store based in Türkiye. Search by manufacturer part number to see stock, prices and datasheets for integrated circuits, microcontrollers, transistors, passive components and connectors, or request a quote for parts that are not listed.

Bu sayfa Entegreci tarafından eklenmiştir. Belgenin önceki sayfaları asıl yayıncısına aittir ve içeriği değiştirilmemiştir; en güncel sürüm için belgenin yayıncısına başvurun.