14A, 500V N-CHANNEL POWER MOSFET

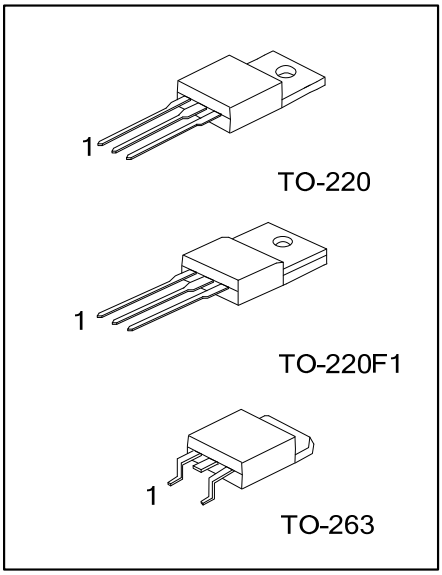

■ DESCRIPTION

The UTC **14N50** is a N-Channel enhancement mode power MOSFET. The device adopts planar stripe and uses DMOS technology to minimize and provide lower on-state resistance and faster switching speed. It can also withstand high energy pulse under the avalanche and commutation mode conditions.

The UTC **14N50** is ideally suitable for high efficiency switch mode power supply, power factor correction and electronic lamp ballast based on half bridge topology.

■ FEATURES

* $R_{DS(ON)}$ < 0.50Ω @ V_{GS} = 10V, I_D = 7A
* Ultra low gate charge (typical 43nC)
* Low reverse transfer Capacitance (C_{RSS} = typical 20pF)
* Fast switching capability
* Avalanche energy tested
* Improved dv/dt capability, high ruggedness

■ SYMBOL

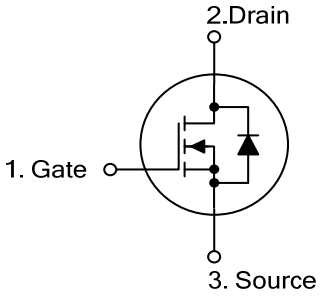

■ ORDERING INFORMATION

Ordering Number		Package	Pin Assignment			Packing
Lead Free	Halogen Free		1	2	3	
14N50L-TA3-T	14N50G-TA3-T	TO-220	G	D	S	Tube
14N50L-TF1-T	14N50G-TF1-T	TO-220F1	G	D	S	Tube
14N50L-TQ2-T	14N50G-TQ2-T	TO-263	G	D	S	Tube
14N50L-TQ2-R	14N50G-TQ2-R	TO-263	G	D	S	Tape Reel

Note: Pin Assignment: G: Gate D: Drain S: Source

14N50L-TA3-T (1)Packing Type (2)Package Type (3)Green Package	(1) T: Tube (2) TA3 : TO-220, TF1: TO-220F1, TQ2: TO-263 (3) L: Lead Free, G: Halogen Free and Lead Free

Copyright © 2016 Unisonic Technologies Co., Ltd

■ MARKING

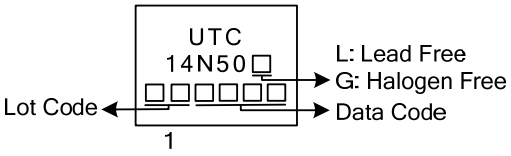

■ ABSOLUTE MAXIMUM RATINGS (T_C = 25°C, unless otherwise specified)

PARAMETER		SYMBOL	RATINGS	UNIT
Drain-Source Voltage		V_{DSS}	500	V
Gate-Source Voltage		V_{GSS}	±30	V
Continuous Drain Current		I_D	14	A
Pulsed Drain Current (Note 2)		I_{DM}	48	A
Avalanche Current (Note 2)		I_{AR}	14	A
Single Pulsed Avalanche Energy (Note 3)		E_{AS}	400	mJ
Peak Diode Recovery dv/dt (Note 4)		dv/dt	4.5	V/ns
Power Dissipation (T_C=25°C)	TO-220	P_D	150	W
	TO-220F1		50	W
	TO-263		150	W
Junction Temperature		T_J	+150	°C
Storage Temperature		T_{STG}	-55~+150	°C

Notes: 1. Absolute maximum ratings are those values beyond which the device could be permanently damaged. Absolute maximum ratings are stress ratings only and functional device operation is not implied.
2. Repetitive Rating : Pulse width limited by maximum junction temperature.
3. L = 9.3mH, I_{AS} = 13A, V_{DD} = 50V, R_G= 25Ω ,Starting T_J = 25°C
4. I_{SD}≤13.A, di/dt ≤200A/μs, V_{DD}≤ BV_{DSS}, Starting T_J= 25°C

■ THERMAL DATA

PARAMETER		SYMBOL	RATINGS	UNIT
Junction to Ambient		θ_{JA}	62.5	°C/W
Junction to Case	TO-220	θ_{JC}	0.83	°C/W
	TO-220F1		2.5	°C/W
	TO-263		0.83	°C/W

■ ELECTRICAL CHARACTERISTICS (T_C =25°C, unless otherwise specified)

PARAMETER	SYMBOL	TEST CONDITIONS	MIN	TYP	MAX	UNIT
OFF CHARACTERISTICS						
Drain-Source Breakdown Voltage	BV_{DSS}	V_{GS} = 0V, I_D = 1mA	500			V
Drain-Source Leakage Current	I_{DSS}	V_{DS} = 500V, V_{GS} = 0V			10	μA
Gate-Source Leakage Current	I_{GSS}	V_{GS} = 20V, V_{DS} = 0V			100	nA
		V_{GS} = -20V, V_{DS} = 0V			-100	nA
Breakdown Voltage Temperature Coefficient	$\triangle BV_{DSS}/\triangle T_J$	I_D=250mA,Referenced to 25°C		0.5		V/°C
ON CHARACTERISTICS						
Gate Threshold Voltage	$V_{GS(TH)}$	V_{DS} = V_{GS}, I_D = 100μA	3	3.75	4.5	V
Static Drain-Source On-State Resistance	$R_{DS(ON)}$	V_{GS} = 10V, I_D = 7A			0.50	Ω
DYNAMIC CHARACTERISTICS						
Input Capacitance	C_{ISS}	V_{DS}=25V, V_{GS}=0V, f=1.0MHz		2000		pF
Output Capacitance	C_{OSS}			238		pF
Reverse Transfer Capacitance	C_{RSS}			55		pF
SWITCHING CHARACTERISTICS						
Total Gate Charge	Q_G	V_{DS}=400V, I_D=12A, V_{GS}=10 V (Note 1,2)		69	92	nC
Gate-Source Charge	Q_{GS}			12		nC
Gate-Drain Charge	Q_{GD}			31		nC
Turn-On Delay Time	$t_{D(ON)}$	V_{DD} =250V, I_D =14A, R_G =25Ω (Note 1,2)		24		nS
Turn-On Rise Time	t_R			70		nS
Turn-Off Delay Time	$t_{D(OFF)}$			54		nS
Turn-Off Fall Time	t_F			50		nS
DRAIN-SOURCE DIODE CHARACTERISTICS AND MAXIMUM RATINGS						
Drain-Source Diode Forward Voltage	V_{SD}	V_{GS} = 0V, I_S = 14A			1.6	V
Maximum Continuous Drain-Source Diode Forward Current	I_S				14	A
Maximum Pulsed Drain-Source Diode Forward Current	I_{SM}				56	A
Reverse Recovery Time	t_{rr}	V_{GS} = 0V, I_S = 14A, dI_F / dt =100A/μs (Note 1)		470		nS
Reverse Recovery Charge	Q_{RR}			3.1		μC

Notes: 1. Pulse Test : Pulse width ≤ 300μs, Duty cycle ≤ 2%.
2. Essentially independent of operating ambient temperature.

■ TEST CIRCUITS AND WAVEFORMS

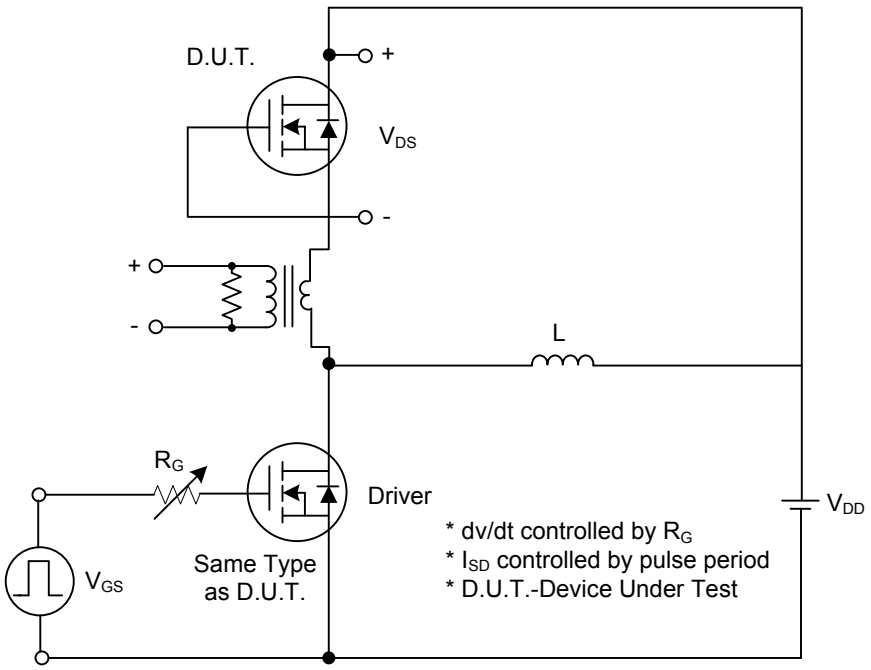

Peak Diode Recovery dv/dt Test Circuit

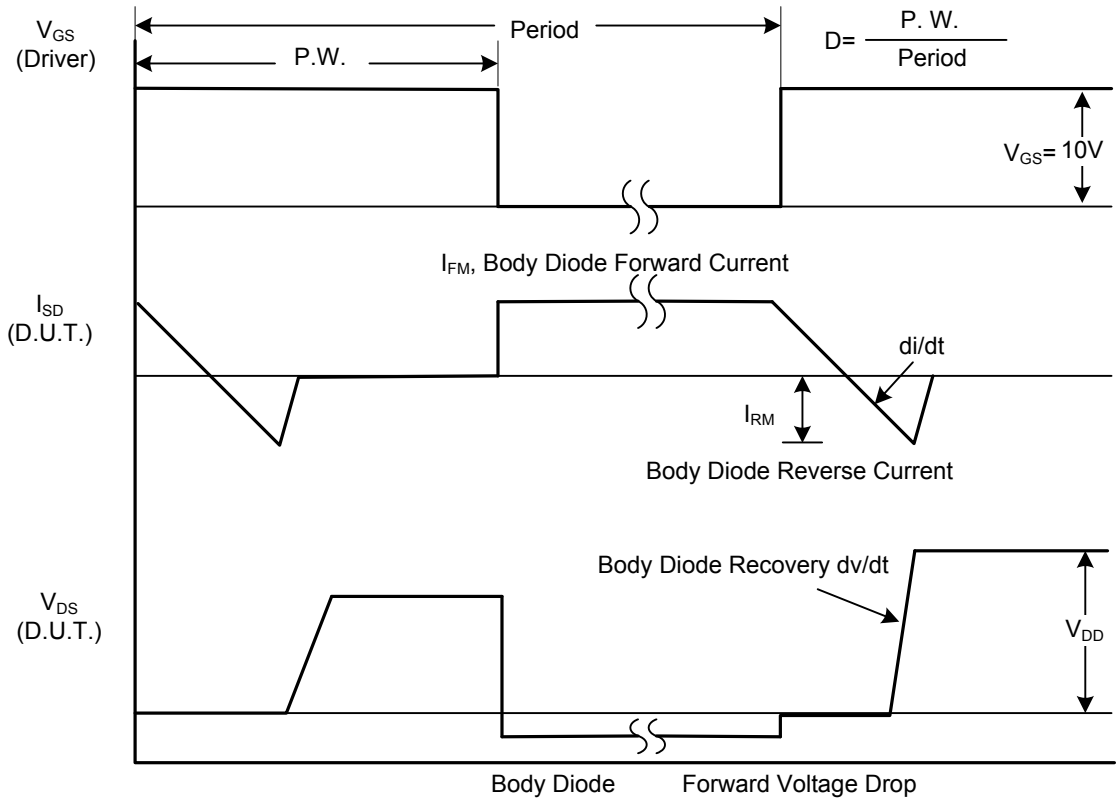

Peak Diode Recovery dv/dt Waveforms

■ TEST CIRCUITS AND WAVEFORMS (Cont.)

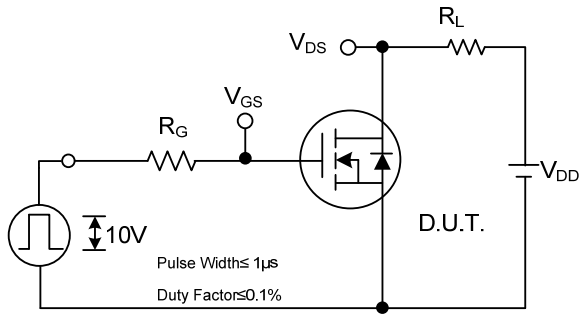

Switching Test Circuit

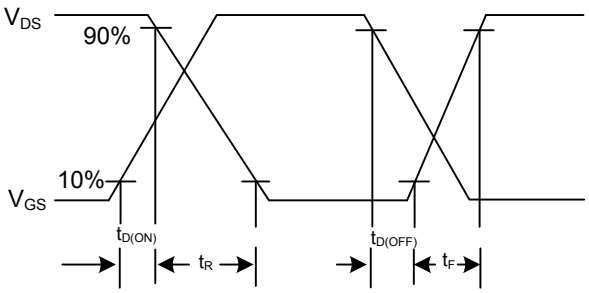

Switching Waveforms

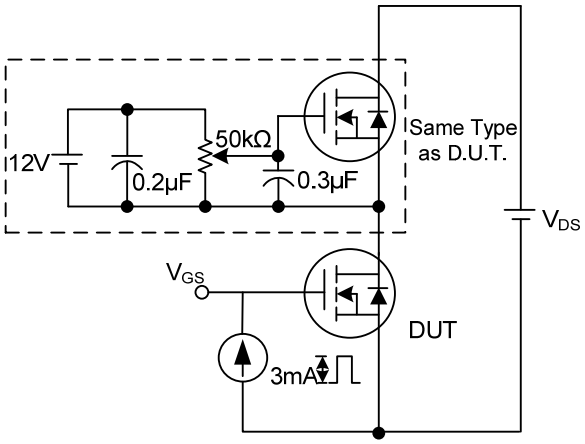

Gate Charge Test Circuit

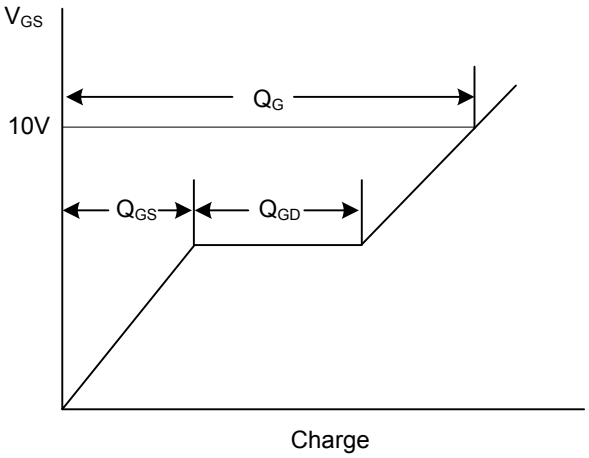

Gate Charge Waveform

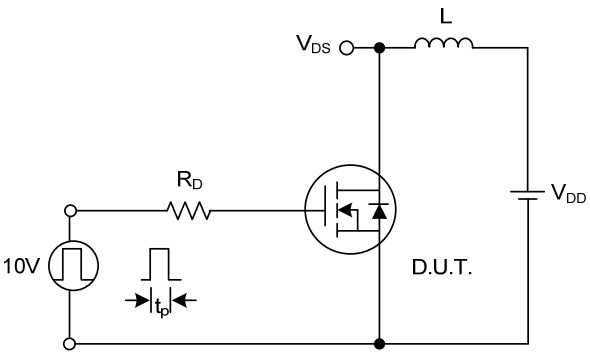

Unclamped Inductive Switching Test Circuit

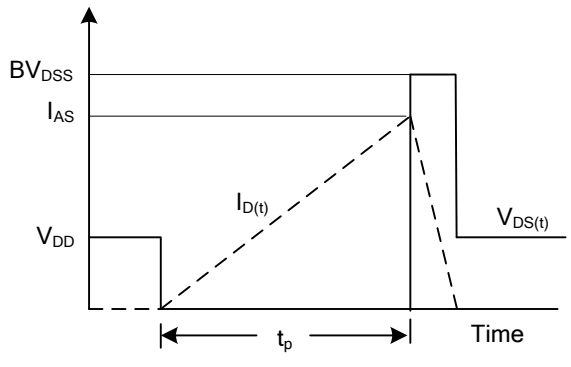

Unclamped Inductive Switching Waveforms

UTC assumes no responsibility for equipment failures that result from using products at values that exceed, even momentarily, rated values (such as maximum ratings, operating condition ranges, or other parameters) listed in products specifications of any and all UTC products described or contained herein. UTC products are not designed for use in life support appliances, devices or systems where malfunction of these products can be reasonably expected to result in personal injury. Reproduction in whole or in part is prohibited without the prior written consent of the copyright owner. The information presented in this document does not form part of any quotation or contract, is believed to be accurate and reliable and may be changed without notice.

ENTEGRECİ

Bu belge www.entegreci.com üzerinden sunulmaktadır.

Elektronik komponent tedarikinde Entegreci

Entegreci, Eskişehir merkezli, Türkiye geneline satış yapan bir elektronik komponent mağazasıdır. Entegreler (IC), mikrodenetleyiciler, transistörler, diyotlar, pasif elemanlar, konnektörler, modüller ve geliştirme kartları tek adetten seri üretim adetlerine kadar satılır. Ürün sayfalarında güncel stok durumunu, fiyatı ve datasheet bağlantısını bulabilirsiniz.

Parça koduyla arama

Üretici parça numarasını yazın; stok ve fiyatı hemen görün.

www.entegreci.com

Ürün kategorileri

Entegreden kapasitöre tüm elektronik komponent kategorileri.

Kategorilere göz atın

Üreticiler

Aradığınız üreticinin ürünlerini tek sayfada inceleyin.

Üreticileri görün

Toplu alım ve teklif

Listede olmayan ya da yüksek adetli parçalar için teklif isteyin.

Teklif isteyin

www.entegreci.com | **destek@entegreci.com** | **0850 305 90 34**

Entegreci is an online electronic components store based in Türkiye. Search by manufacturer part number to see stock, prices and datasheets for integrated circuits, microcontrollers, transistors, passive components and connectors, or request a quote for parts that are not listed.

Bu sayfa Entegreci tarafından eklenmiştir. Belgenin önceki sayfaları asıl yayıncısına aittir ve içeriği değiştirilmemiştir; en güncel sürüm için belgenin yayıncısına başvurun.