13N50

Power MOSFET

13A, 500V N-CHANNEL POWER MOSFET

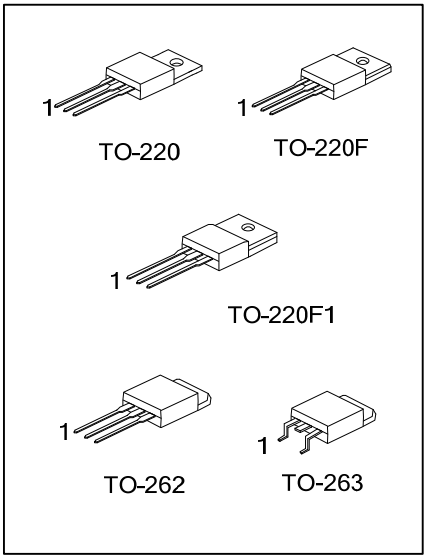

■ DESCRIPTION

The UTC **13N50** is a N-Channel enhancement mode power MOSFET. The device adopts planar stripe and uses DMOS technology to minimize and provide lower on-state resistance and faster switching speed. It can also withstand high energy pulse under the avalanche and commutation mode conditions.

The UTC **13N50** is ideally suitable for high efficiency switch mode power supply, power factor correction, electronic lamp ballast based on half bridge topology.

■ FEATURES

* $R_{DS(ON)}$ < 0.48Ω @ V_{GS} = 10V, I_D = 6.5A
* Avalanche energy tested

■ SYMBOL

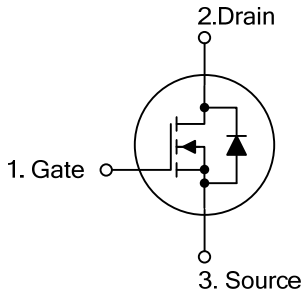

■ ORDERING INFORMATION

Ordering Number		Package	Pin Assignment			Packing
Lead Free	Halogen Free		1	2	3	
13N50L-TA3-T	13N50G-TA3-T	TO-220	G	D	S	Tube
13N50L-TF3-T	13N50G-TF3-T	TO-220F	G	D	S	Tube
13N50L-TF1-T	13N50G-TF1-T	TO-220F1	G	D	S	Tube
13N50L-T2Q-T	13N50G-T2Q-T	TO-262	G	D	S	Tube
13N50L-TQ2-T	13N50G-TQ2-T	TO-263	G	D	S	Tube
13N50L-TQ2-R	13N50G-TQ2-R	TO-263	G	D	S	Tape Reel

Note: Pin Assignment: G: Gate D: Drain S: Source

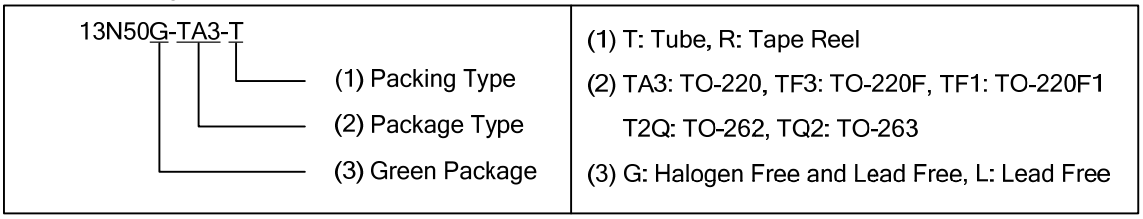

Copyright © 2017 Unisonic Technologies Co., Ltd

■ MARKING

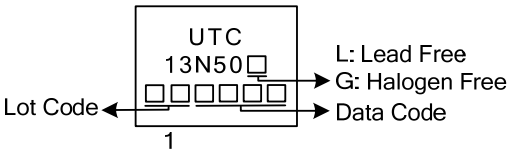

■ ABSOLUTE MAXIMUM RATINGS (T_C = 25°C, unless otherwise specified)

PARAMETER		SYMBOL	RATINGS	UNIT
Drain-Source Voltage		V_{DSS}	500	V
Gate-Source Voltage		V_{GSS}	±30	V
Drain Current	Continuous	I_D	13	A
	Pulsed (Note 2)	I_{DM}	52	A
Avalanche Current (Note 2)		I_{AR}	11.3	A
Avalanche Energy	Single Pulsed (Note 3)	E_{AS}	638	mJ
Peak Diode Recovery dv/dt (Note 4)		dv/dt	3.7	V/ns
Power Dissipation	TO-220/TO-262 TO-263	P_D	168	W
	TO-220F/TO-220F1		35	W
Junction Temperature		T_J	+150	°C
Storage Temperature		T_{STG}	-55 ~ +150	°C

Notes: 1. Absolute maximum ratings are those values beyond which the device could be permanently damaged. Absolute maximum ratings are stress ratings only and functional device operation is not implied.
2. Repetitive Rating : Pulse width limited by maximum junction temperature.
3. L=10mH, I_{AS}=11.3A, V_{DD}=50V, R_G=25 Ω, Starting T_J = 25°C
4. I_{SD}≤13A, di/dt≤200A/μs, V_{DD}≤ BV_{DSS}, Starting T_J = 25°C

■ THERMAL DATA

PARAMETER		SYMBOL	RATINGS	UNIT
Junction to Ambient		θ_{JA}	62.5	°C/W
Junction to Case	TO-220/TO-262 TO-263	θ_{JC}	0.74	°C/W
	TO-220F/TO-220F1		3.57	

■ ELECTRICAL CHARACTERISTICS (T_J=25°C, unless otherwise specified)

PARAMETER	SYMBOL	TEST CONDITIONS	MIN	TYP	MAX	UNIT
OFF CHARACTERISTICS						
Drain-Source Breakdown Voltage	BV_{DSS}	V_{GS} = 0V, I_D = 250μA	500			V
Drain-Source Leakage Current	I_{DSS}	V_{DS} = 500V, V_{GS} = 0V			1	μA
Gate-Source Leakage Current	I_{GSS}	V_{GS} = 30V, V_{DS} = 0V			100	nA
		V_{GS} = -30V, V_{DS} = 0V			-100	nA
ON CHARACTERISTICS						
Gate Threshold Voltage	$V_{GS(TH)}$	V_{DS} = V_{GS}, I_D = 250μA	2.0		4.0	V
Static Drain-Source On-State Resistance	$R_{DS(ON)}$	V_{GS} = 10V, I_D = 6.5A			0.48	Ω
DYNAMIC CHARACTERISTICS						
Input Capacitance	C_{ISS}	V_{GS}=0V, V_{DS}=25V, f=1.0MHz		1630		pF
Output Capacitance	C_{OSS}			202		pF
Reverse Transfer Capacitance	C_{RSS}			32		pF
SWITCHING CHARACTERISTICS						
Total Gate Charge (Note 1)	Q_G	V_{DS}=50V, V_{GS}=10V, I_D=1.3A, I_D=100μA (Note 1, 2)		140		nC
Gate to Source Charge	Q_{GS}			13		nC
Gate to Drain Charge	Q_{GD}			33.8		nC
Turn-ON Delay Time (Note 1)	$t_{D(ON)}$	V_{DS}=30V, V_{GS}=10V, I_D=0.5A, R_G=25Ω (Note 1, 2)		94		nS
Rise Time	t_R			158		nS
Turn-OFF Delay Time	$t_{D(OFF)}$			470		nS
Fall-Time	t_F			166		nS
SOURCE- DRAIN DIODE RATINGS AND CHARACTERISTICS						
Maximum Body-Diode Continuous Current	I_S				13	A
Maximum Body-Diode Pulsed Current	I_{SM}				52	A
Drain-Source Diode Forward Voltage (Note 1)	V_{SD}	I_S=13A, V_{GS}=0V			1.4	V
Body Diode Reverse Recovery Time (Note 1)	t_{rr}	I_S=13A, V_{GS}=0V, dI_F/dt=100A/μs		350		nS
Body Diode Reverse Recovery Charge	Q_{rr}			4.5		μC

Notes: 1. Pulse Test: Pulse width ≤ 300μs, Duty cycle≤2%.
2. Essentially independent of operating ambient temperature.

■ TEST CIRCUITS AND WAVEFORMS

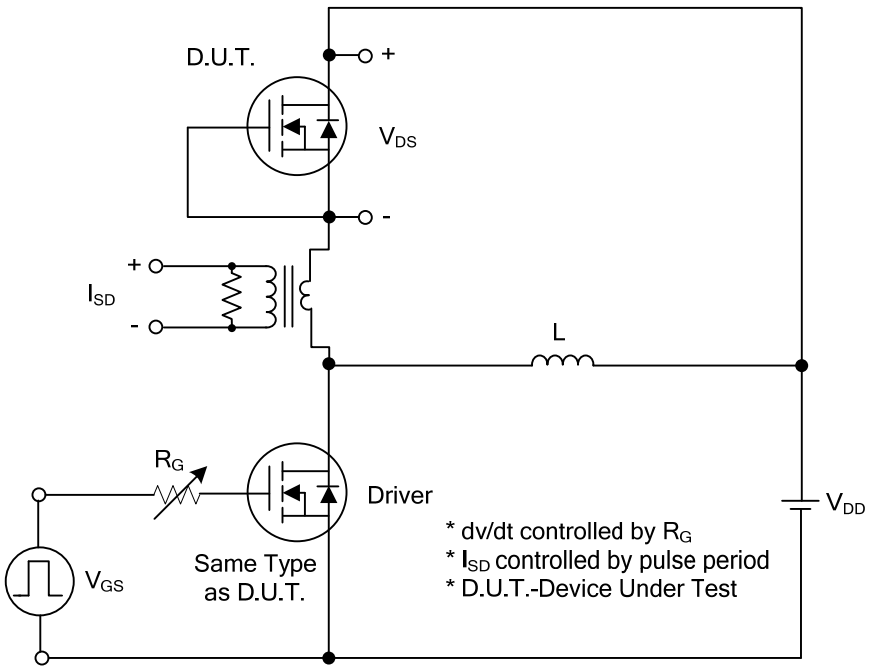

Peak Diode Recovery dv/dt Test Circuit

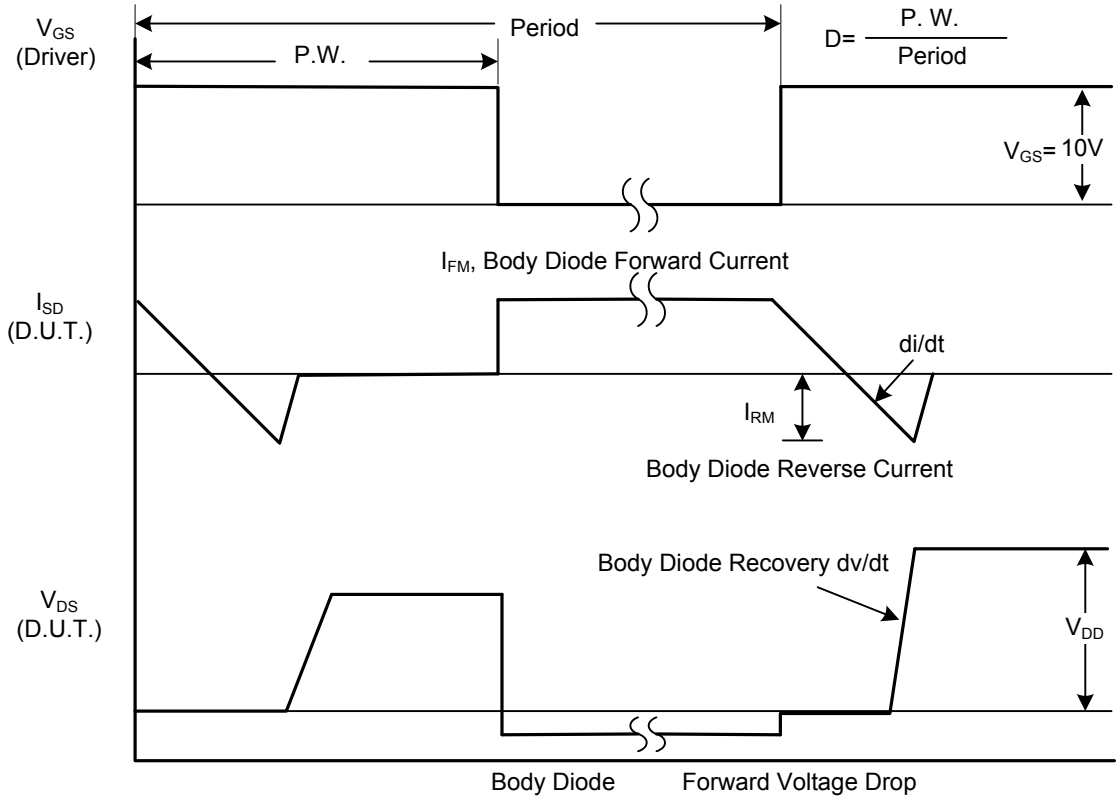

Peak Diode Recovery dv/dt Waveforms

■ TEST CIRCUITS AND WAVEFORMS (Cont.)

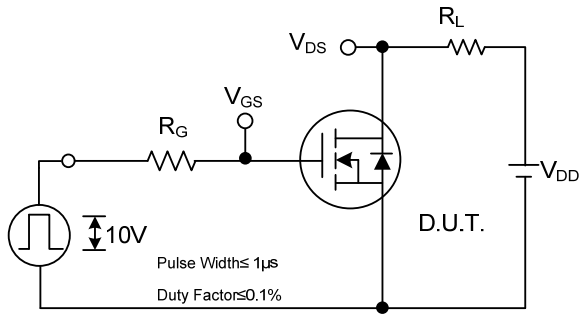

Switching Test Circuit

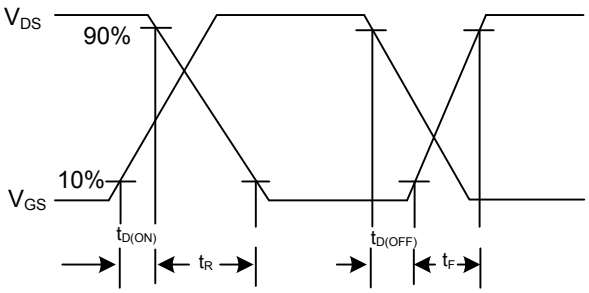

Switching Waveforms

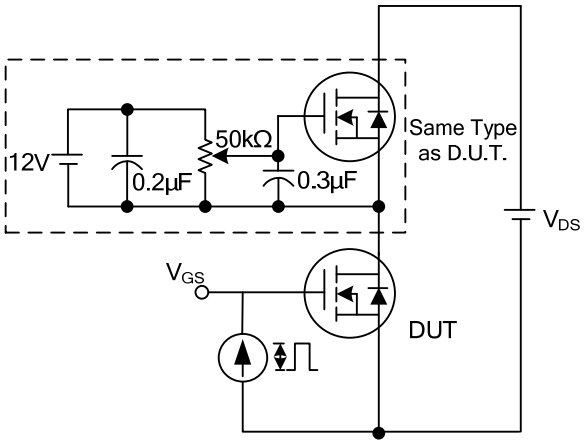

Gate Charge Test Circuit

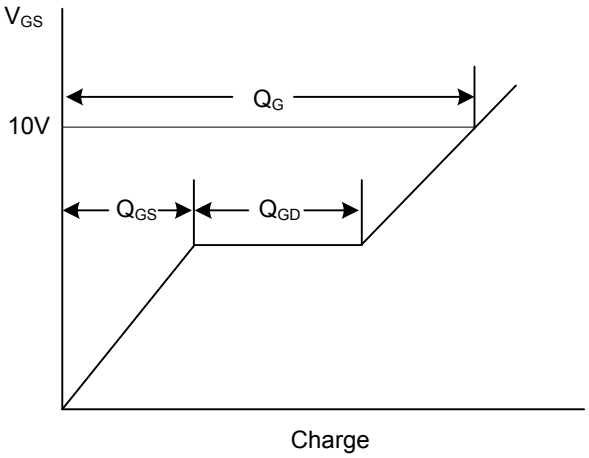

Gate Charge Waveform

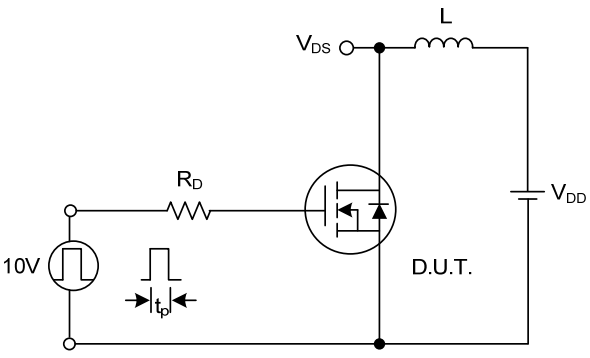

Unclamped Inductive Switching Test Circuit

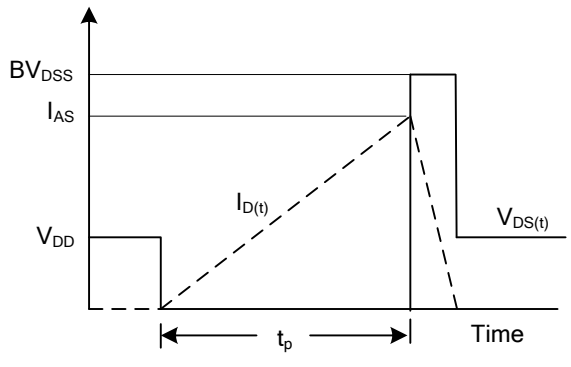

Unclamped Inductive Switching Waveforms

■ TYPICAL CHARACTERISTICS

Drain Current vs. Drain-Source Breakdown Voltage

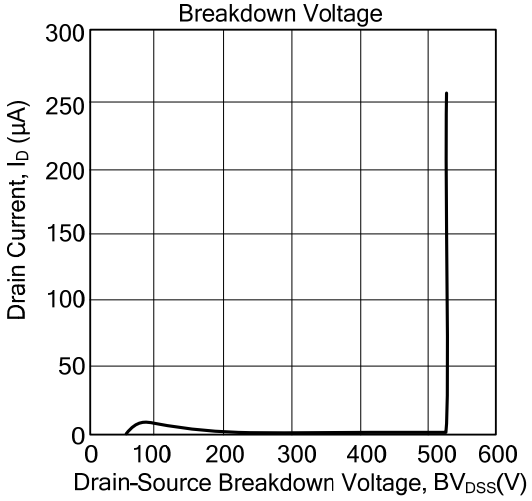

Drain Current vs. Gate Threshold Voltage

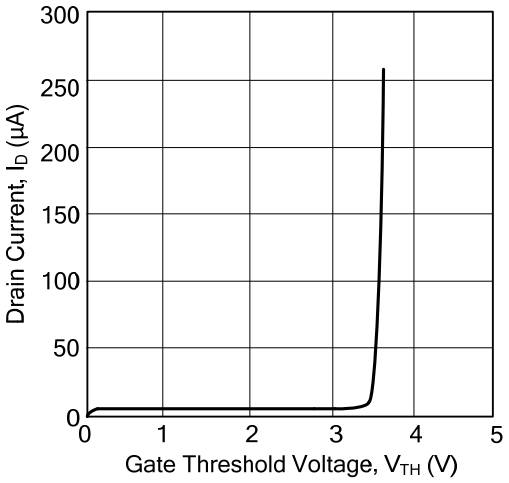

Drain-Source On-State Resistance Characteristics

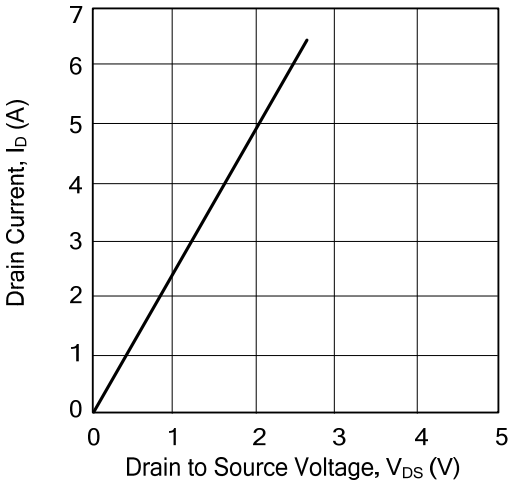

Drain Current vs. Source to Drain Voltage

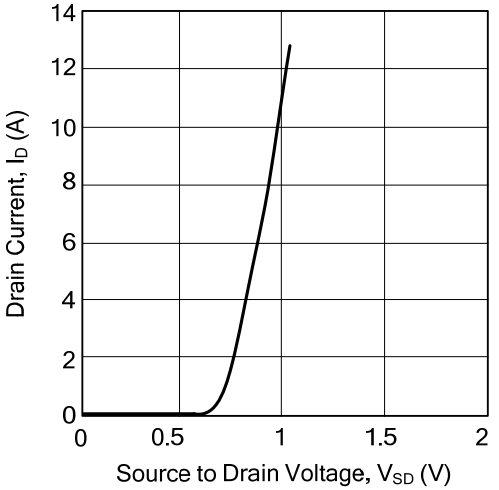

Maximum Safe Operating Area

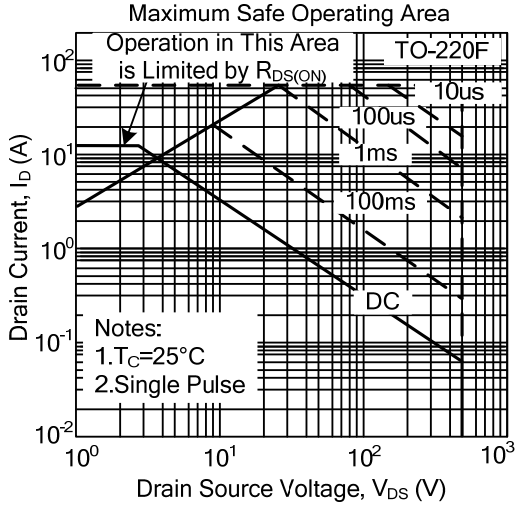

UTC assumes no responsibility for equipment failures that result from using products at values that exceed, even momentarily, rated values (such as maximum ratings, operating condition ranges, or other parameters) listed in products specifications of any and all UTC products described or contained herein. UTC products are not designed for use in life support appliances, devices or systems where malfunction of these products can be reasonably expected to result in personal injury. Reproduction in whole or in part is prohibited without the prior written consent of the copyright owner. The information presented in this document does not form part of any quotation or contract, is believed to be accurate and reliable and may be changed without notice.

ENTEGRECİ

Bu belge www.entegreci.com üzerinden sunulmaktadır.

Elektronik komponent tedarikinde Entegreci

Entegreci, Eskişehir merkezli, Türkiye geneline satış yapan bir elektronik komponent mağazasıdır. Entegreler (IC), mikrodenetleyiciler, transistörler, diyotlar, pasif elemanlar, konnektörler, modüller ve geliştirme kartları tek adetten seri üretim adetlerine kadar satılır. Ürün sayfalarında güncel stok durumunu, fiyatı ve datasheet bağlantısını bulabilirsiniz.

Parça koduyla arama

Üretici parça numarasını yazın; stok ve fiyatı hemen görün.

www.entegreci.com

Ürün kategorileri

Entegreden kapasitöre tüm elektronik komponent kategorileri.

Kategorilere göz atın

Üreticiler

Aradığınız üreticinin ürünlerini tek sayfada inceleyin.

Üreticileri görün

Toplu alım ve teklif

Listede olmayan ya da yüksek adetli parçalar için teklif isteyin.

Teklif isteyin

www.entegreci.com | **destek@entegreci.com** | **0850 305 90 34**

Entegreci is an online electronic components store based in Türkiye. Search by manufacturer part number to see stock, prices and datasheets for integrated circuits, microcontrollers, transistors, passive components and connectors, or request a quote for parts that are not listed.

Bu sayfa Entegreci tarafından eklenmiştir. Belgenin önceki sayfaları asıl yayıncısına aittir ve içeriği değiştirilmemiştir; en güncel sürüm için belgenin yayıncısına başvurun.