# 12N60

**Power MOSFET**

## 12A, 600V N-CHANNEL POWER MOSFET

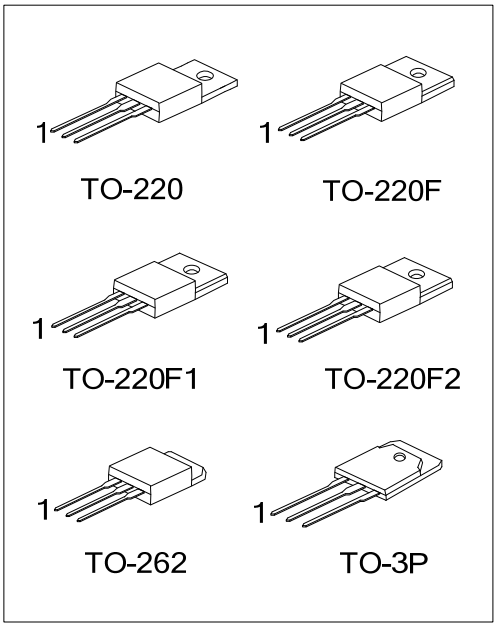


### ■ DESCRIPTION

The UTC **12N60** are N-Channel enhancement mode power field effect transistors (MOSFET) which are produced using UTC's proprietary, planar stripe, DMOS technology.

These devices are suited for high efficiency switch mode power supply. To minimize on-state resistance, provide superior switching performance, and withstand high energy pulse in the avalanche and commutation mode the advanced technology has been especially tailored.

### ■ FEATURES

* $R_{DS(ON)}$ < 0.8Ω @$V_{GS}$ = 10 V
* Ultra low gate charge ( typical 42 nC )
* Low reverse transfer capacitance ( $C_{RSS}$ = typical 25 pF )
* Fast switching capability
* Avalanche energy specified
* Improved dv/dt capability, high ruggedness

### ■ SYMBOL

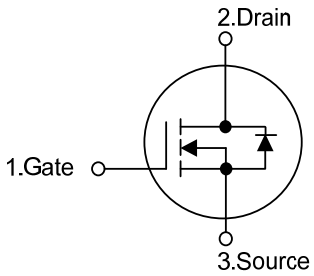


### ■ ORDERING INFORMATION

| Ordering Number | | Package | Pin Assignment | | | Packing |
|---|---|---|---|---|---|---|
| Lead Free | Halogen Free | | 1 | 2 | 3 | |
| 12N60L-TA3-T | 12N60G-TA3-T | TO-220 | G | D | S | Tube |
| 12N60L-TF1-T | 12N60G-TF1-T | TO-220F1 | G | D | S | Tube |
| 12N60L-TF2-T | 12N60G-TF2-T | TO-220F2 | G | D | S | Tube |
| 12N60L-TF3-T | 12N60G-TF3-T | TO-220F | G | D | S | Tube |
| 12N60L-T2Q-T | 12N60G-T2Q-T | TO-262 | G | D | S | Tube |
| 12N60L-T3P-T | 12N60G-T3P-T | TO-3P | G | D | S | Tube |

Note: Pin Assignment: G: Gate D: Drain S: Source

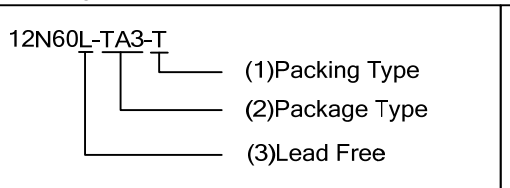


(1) T: Tube
(2) TA3: TO-220, TF1: TO-220F1, TF2: TO-220F2
TF3: TO-220F, T2Q: TO-262, T3P: TO-3P
(3) L: Lead Free, G: Halogen Free


Copyright © 2014 Unisonic Technologies Co., Ltd

## ■ MARKING

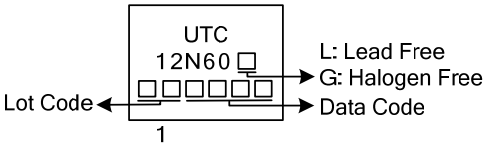

## ■ ABSOLUTE MAXIMUM RATINGS ($T_C$ = 25°C, unless otherwise specified)

| PARAMETER | | SYMBOL | RATINGS | UNIT |
|---|---|---|---|---|
| Drain-Source Voltage | | $V_{DSS}$ | 600 | V |
| Gate-Source Voltage | | $V_{GSS}$ | ±30 | V |
| Avalanche Current (Note 2) | | $I_{AR}$ | 12 | A |
| Drain Current | Continuous | $I_D$ | 12 | A |
| | Pulsed (Note 2) | $I_{DM}$ | 48 | A |
| Avalanche Energy | Single Pulsed (Note 3) | $E_{AS}$ | 790 | mJ |
| | Repetitive (Note 2) | $E_{AR}$ | 24 | mJ |
| Peak Diode Recovery dv/dt (Note 4) | | dv/dt | 4.5 | V/ns |
| Power Dissipation | TO-220 / TO-262 | $P_D$ | 225 | W |
| | TO-220F / TO-220F1 | | 51 | W |
| | TO-220F2 | | 54 | W |
| | TO-3P | | 260 | W |
| Junction Temperature | | $T_J$ | +150 | °C |
| Operating Temperature | | $T_{OPR}$ | -55 ~ +150 | °C |
| Storage Temperature | | $T_{STG}$ | -55 ~ +150 | °C |

Notes: 1. Absolute maximum ratings are those values beyond which the device could be permanently damaged. Absolute maximum ratings are stress ratings only and functional device operation is not implied.
2. Repetitive Rating : Pulse width limited by maximum junction temperature
3. L = 10mH, $I_{AS}$ = 12A, $V_{DD}$ = 50V, $R_G$ = 25Ω, Starting $T_J$ = 25°C
4. $I_{SD}$ ≤ 12A, di/dt ≤200A/s, $V_{DD}$ ≤$BV_{DSS}$ Starting $T_J$ = 25°C

## ■ THERMAL DATA

| PARAMETER | | SYMBOL | RATING | UNIT |
|---|---|---|---|---|
| Junction to Ambient | TO-220/TO-220F<br>TO-220F1/TO-220F2<br>TO-262 | $\theta_{JA}$ | 62.5 | °C/W |
| | TO-3P | | 40 | °C/W |
| Junction to Case | TO-220 / TO-262 | $\theta_{JC}$ | 0.56 | °C/W |
| | TO-220F/TO-220F1 | | 2.43 | °C/W |
| | TO-220F2 | | 2.31 | °C/W |
| | TO-3P | | 0.48 | °C/W |

## ■ ELECTRICAL CHARACTERISTICS ($T_C$ =25°C, unless otherwise specified)

| PARAMETER | SYMBOL | TEST CONDITIONS | MIN | TYP | MAX | UNIT |
|---|---|---|---|---|---|---|
| **OFF CHARACTERISTICS** | | | | | | |
| Drain-Source Breakdown Voltage | $BV_{DSS}$ | $V_{GS}$ = 0 V, $I_D$ = 250 μA | 600 | | | V |
| Drain-Source Leakage Current | $I_{DSS}$ | $V_{DS}$ = 600 V, $V_{GS}$ = 0 V | | | 1 | μA |
| Gate-Source Leakage Current | $I_{GSS}$ | $V_{GS}$ = ±30 V, $V_{DS}$ = 0 V | | | ±100 | nA |
| Breakdown Voltage Temperature Coefficient | $\triangle BV_{DSS}/\triangle T_J$ | $I_D$=250μA, Referenced to 25°C | | 0.7 | | V/°C |
| **ON CHARACTERISTICS** | | | | | | |
| Gate Threshold Voltage | $V_{GS(TH)}$ | $V_{DS}$ = $V_{GS}$, $I_D$ = 250μA | 2.0 | | 4.0 | V |
| Static Drain-Source On-State Resistance | $R_{DS(ON)}$ | $V_{GS}$ = 10V, $I_D$ = 6.0A | | 0.6 | 0.8 | Ω |
| **DYNAMIC CHARACTERISTICS** | | | | | | |
| Input Capacitance | $C_{ISS}$ | $V_{DS}$ = 25 V, $V_{GS}$ = 0 V, f = 1MHz | | 1480 | 1900 | pF |
| Output Capacitance | $C_{OSS}$ | | | 200 | 270 | pF |
| Reverse Transfer Capacitance | $C_{RSS}$ | | | 25 | 35 | pF |
| Gate Resistance | $R_G$ | $V_{DS}$ =0V, $V_{GS}$ =0V, f =1MHz | 0.2 | | 1.2 | Ω |
| **SWITCHING CHARACTERISTICS** | | | | | | |
| Turn-On Delay Time | $t_{D(ON)}$ | $V_{DD}$ = 300V, $I_D$ = 12A, $R_G$ = 25Ω (Note 1, 2) | | 30 | 70 | ns |
| Turn-On Rise Time | $t_R$ | | | 115 | 240 | ns |
| Turn-Off Delay Time | $t_{D(OFF)}$ | | | 95 | 200 | ns |
| Turn-Off Fall Time | $t_F$ | | | 85 | 180 | ns |
| Total Gate Charge | $Q_G$ | $V_{DS}$= 480V,$I_D$= 12A, $V_{GS}$= 10 V (Note 1, 2) | | 42 | 54 | nC |
| Gate-Source Charge | $Q_{GS}$ | | | 8.6 | | nC |
| Gate-Drain Charge | $Q_{GD}$ | | | 21 | | nC |
| **SOURCE- DRAIN DIODE RATINGS AND CHARACTERISTICS** | | | | | | |
| Drain-Source Diode Forward Voltage | $V_{SD}$ | $V_{GS}$ = 0 V, $I_S$ = 12A | | | 1.4 | V |
| Maximum Continuous Drain-Source Diode Forward Current | $I_S$ | | | | 12 | A |
| Maximum Pulsed Drain-Source Diode Forward Current | $I_{SM}$ | | | | 48 | A |
| Reverse Recovery Time | $t_{rr}$ | $V_{GS}$ = 0 V, $I_S$ = 12A, $dI_F/dt$ = 100 A/μs (Note 1) | | 380 | | ns |
| Reverse Recovery Charge | $Q_{RR}$ | | | 3.5 | | μC |

Notes: 1. Pulse Test : Pulse width ≤300μs, Duty cycle ≤ 2%
2. Essentially independent of operating temperature

## ■ TEST CIRCUITS AND WAVEFORMS

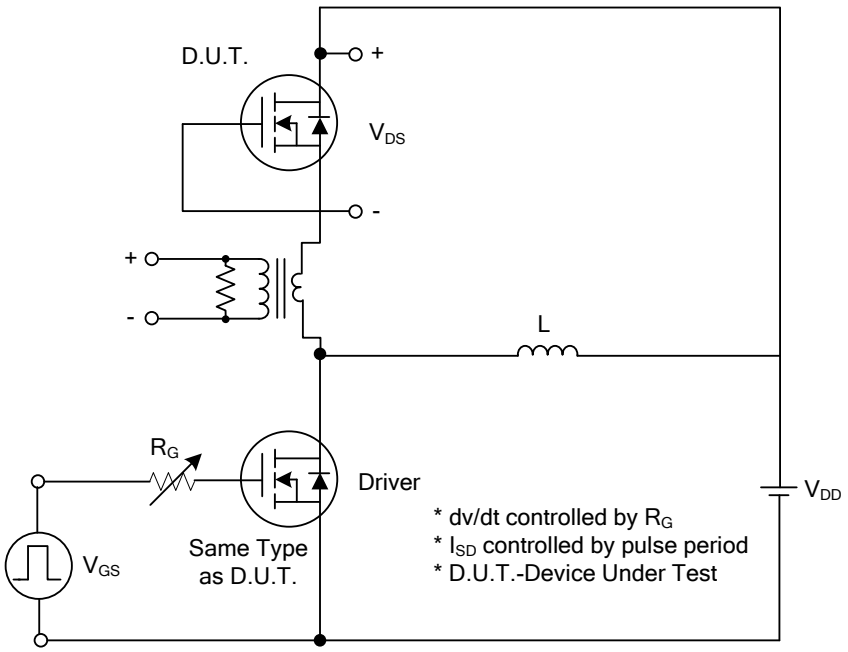


Peak Diode Recovery dv/dt Test Circuit

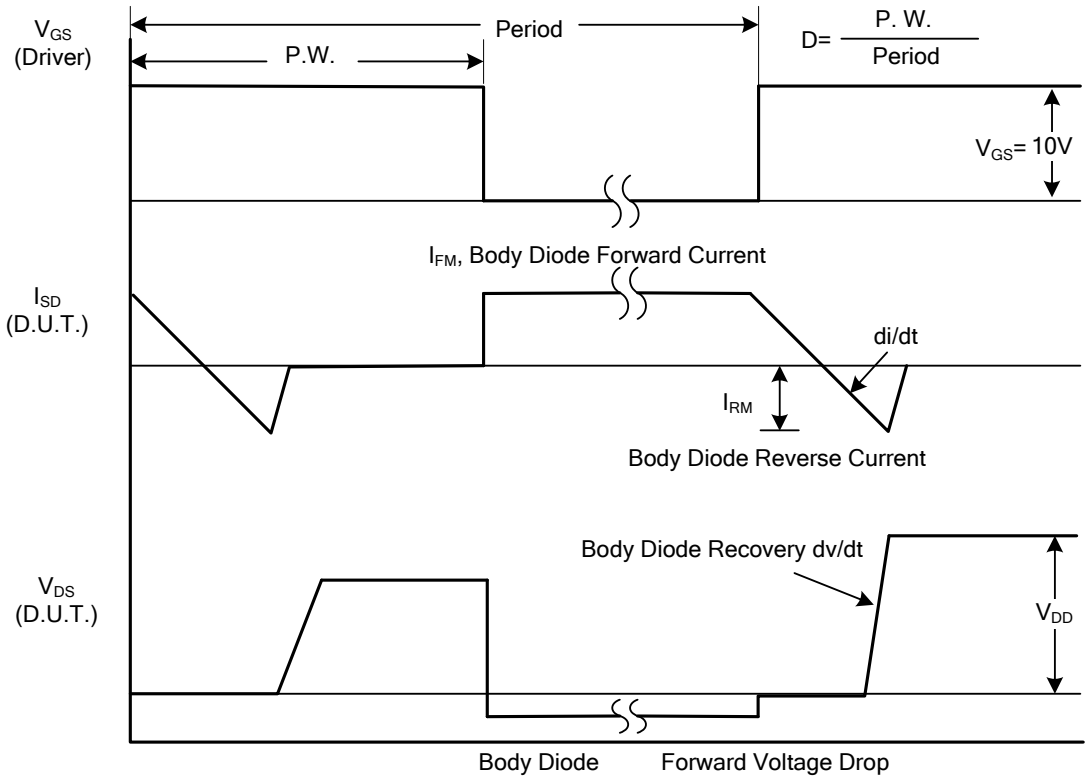


**Peak Diode Recovery dv/dt Waveforms**

## ■ TEST CIRCUITS AND WAVEFORMS (Cont.)

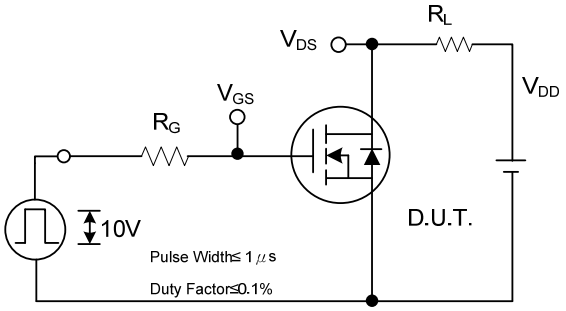


**Switching Test Circuit**

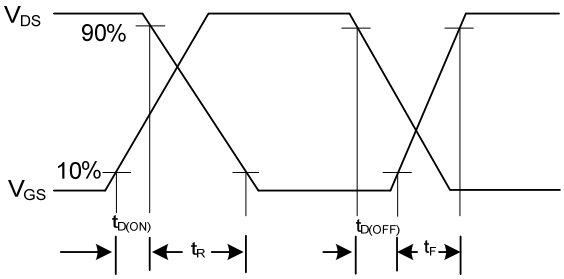


**Switching Waveforms**

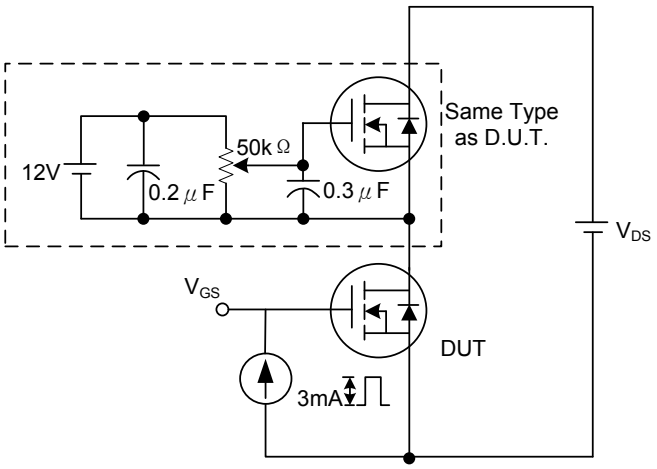


**Gate Charge Test Circuit**

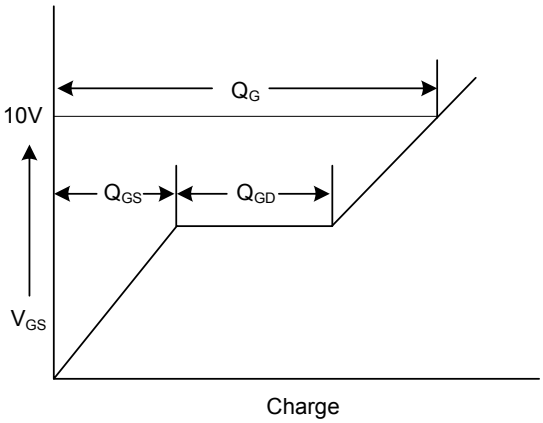


**Gate Charge Waveform**

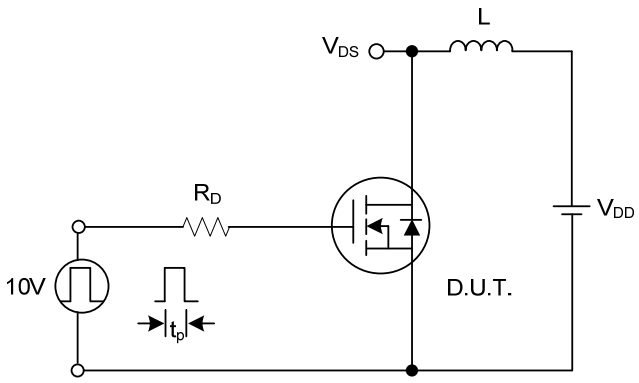


**Unclamped Inductive Switching Test Circuit**

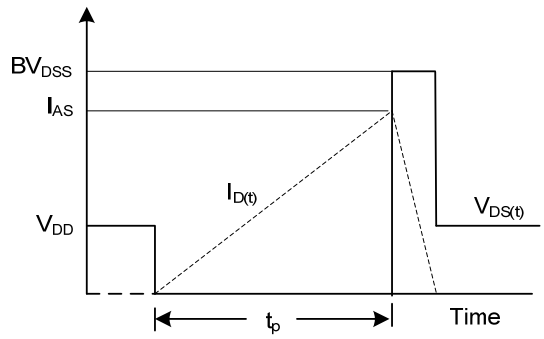


**Unclamped Inductive Switching Waveforms**

## ■ TYPICAL CHARACTERISTICS

On-Resign Characteristics

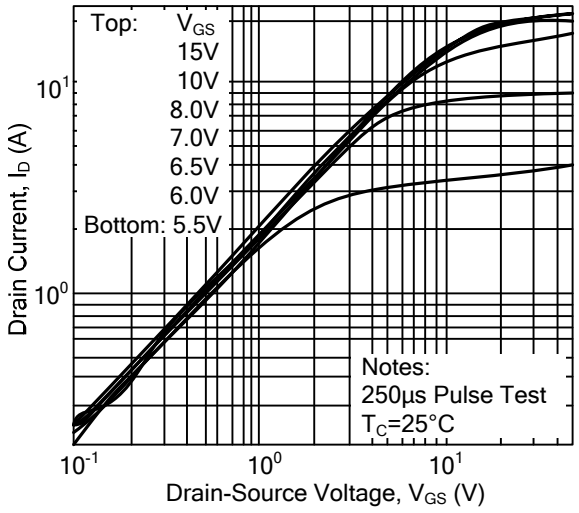


Transfer Characteristics

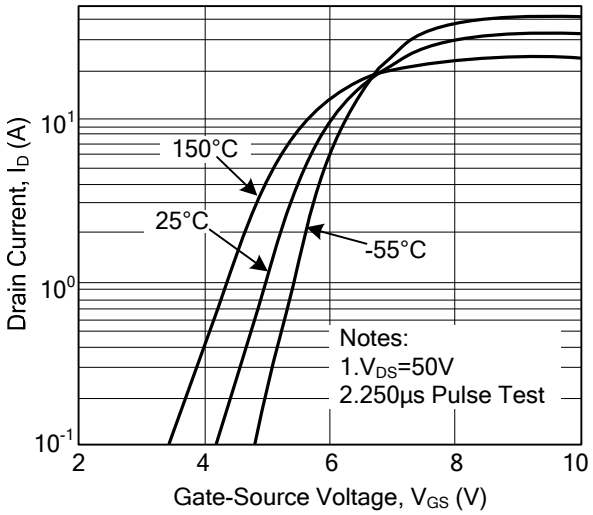


On-Resistance Variation vs.Drain Current and Gate Voltage

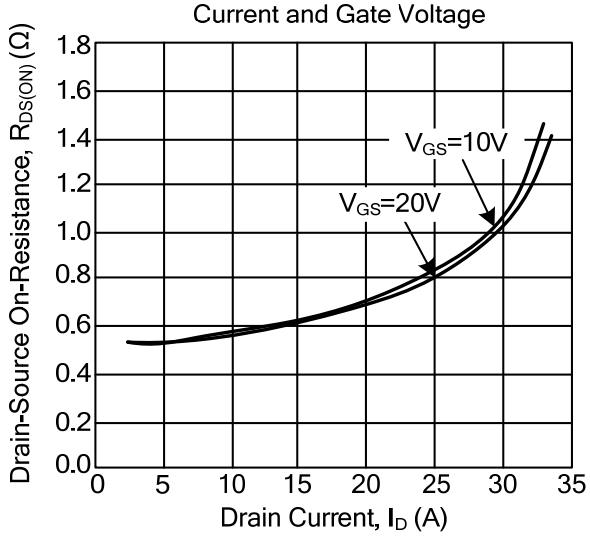


Body Diode Forward Voltage Variation vs. Source Current and Temperature

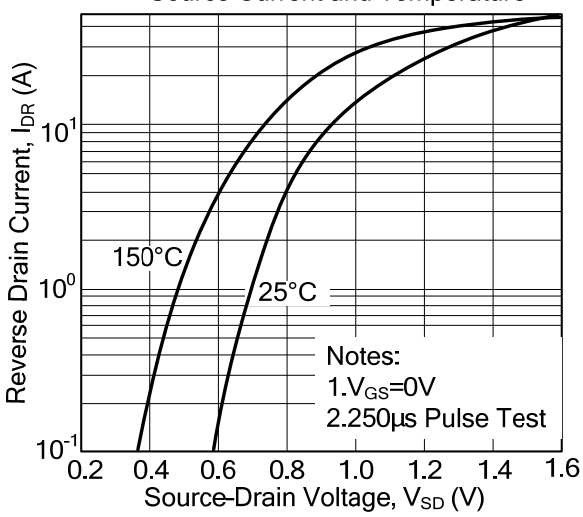


Capacitance Characteristics

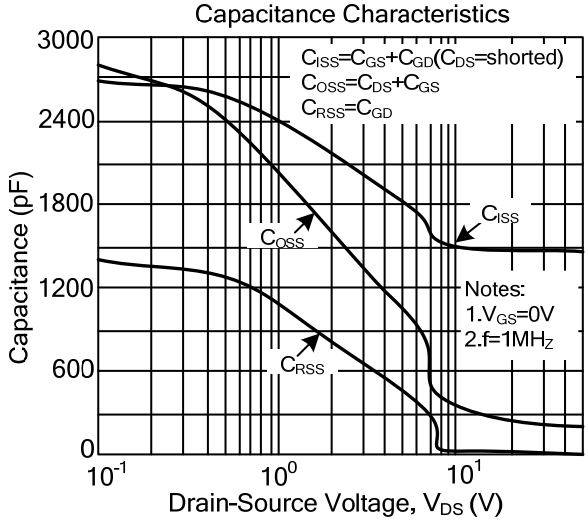


Gate Charge Characteristics

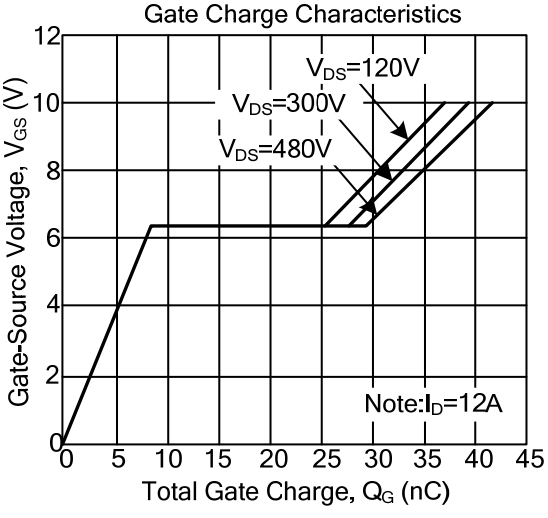

## ■ TYPICAL CHARACTERISTICS

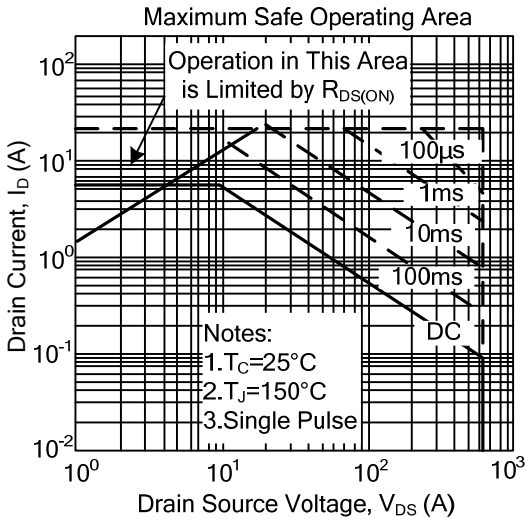


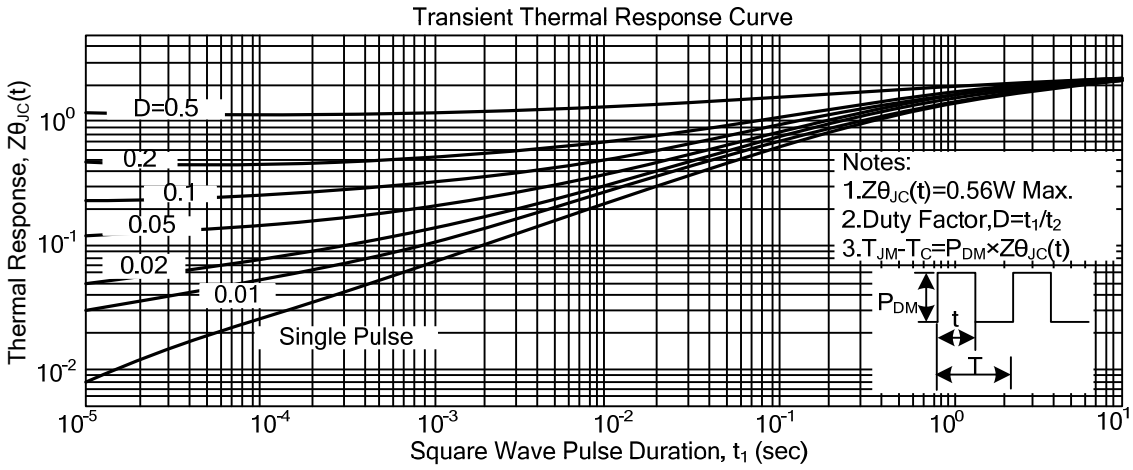


UTC assumes no responsibility for equipment failures that result from using products at values that exceed, even momentarily, rated values (such as maximum ratings, operating condition ranges, or other parameters) listed in products specifications of any and all UTC products described or contained herein. UTC products are not designed for use in life support appliances, devices or systems where malfunction of these products can be reasonably expected to result in personal injury. Reproduction in whole or in part is prohibited without the prior written consent of the copyright owner. The information presented in this document does not form part of any quotation or contract, is believed to be accurate and reliable and may be changed without notice.

ENTEGRECİ

Bu belge www.entegreci.com üzerinden sunulmaktadır.

# Elektronik komponent tedarikinde Entegreci

Entegreci, Eskişehir merkezli, Türkiye geneline satış yapan bir elektronik komponent mağazasıdır. Entegreler (IC), mikrodenetleyiciler, transistörler, diyotlar, pasif elemanlar, konnektörler, modüller ve geliştirme kartları tek adetten seri üretim adetlerine kadar satılır. Ürün sayfalarında güncel stok durumunu, fiyatı ve datasheet bağlantısını bulabilirsiniz.

### Parça koduyla arama

Üretici parça numarasını yazın; stok ve fiyatı hemen görün.

**www.entegreci.com**

### Ürün kategorileri

Entegreden kapasitöre tüm elektronik komponent kategorileri.

**Kategorilere göz atın**

### Üreticiler

Aradığınız üreticinin ürünlerini tek sayfada inceleyin.

**Üreticileri görün**

### Toplu alım ve teklif

Listede olmayan ya da yüksek adetli parçalar için teklif isteyin.

**Teklif isteyin**

**www.entegreci.com** | **destek@entegreci.com** | **0850 305 90 34**

Entegreci is an online electronic components store based in Türkiye. Search by manufacturer part number to see stock, prices and datasheets for integrated circuits, microcontrollers, transistors, passive components and connectors, or request a quote for parts that are not listed.

Bu sayfa Entegreci tarafından eklenmiştir. Belgenin önceki sayfaları asıl yayıncısına aittir ve içeriği değiştirilmemiştir; en güncel sürüm için belgenin yayıncısına başvurun.