12N10

Power MOSFET

12A, 100V N-CHANNEL POWER MOSFET

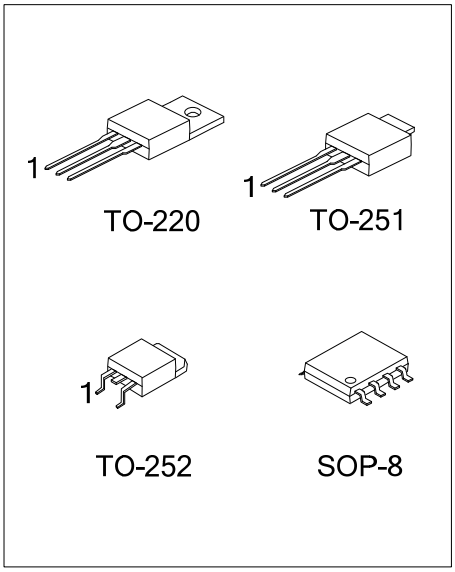

■ DESCRIPTION

The UTC **12N10** is an N-channel mode power MOSFET using UTC's advanced technology to provide customers with minimum on-state resistance for extremely high dense cell design, rugged avalanche characteristics and less critical alignment steps.

■ FEATURES

* $R_{DS(on)}$ < 0.18Ω @ V_{GS}=10V, I_D=6A
* High switching speed
* Low gate charge

■ SYMBOL

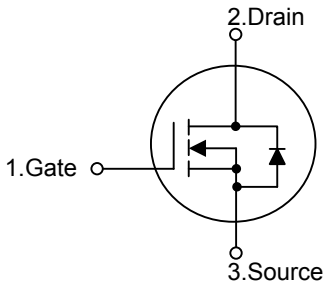

■ ORDERING INFORMATION

Ordering Number		Package	Pin Assignment								Packing
Lead Free	Halogen Free		1	2	3	4	5	6	7	8	
12N10L-TA3-T	12N10G-TA3-T	TO-220	G	D	S	-	-	-	-	-	Tube
12N10L-TM3-T	12N10G-TM3-T	TO-251	G	D	S	-	-	-	-	-	Tube
12N10L-TN3-R	12N10G-TN3-R	TO-252	G	D	S	-	-	-	-	-	Tape Reel
-	12N10G-S08-R	SOP-8	S	S	S	G	D	D	D	D	Tape Reel

Note: Pin Assignment: G: Gate D: Drain S: Source

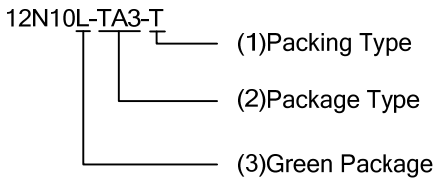

(1) T: Tube, R: Tape Reel
(2) TA3: TO-220, TM3: TO-251, TN3: TO-252
S08: SOP-8
(3) L: Lead Free, G: Halogen Free and Lead Free

Copyright © 2014 Unisonic Technologies Co., Ltd

■ MARKING

TO-220 / TO-251 / TO-252	SOP-8
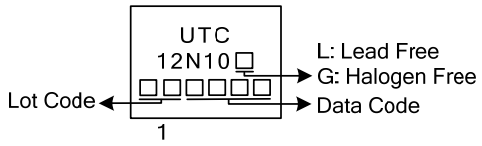	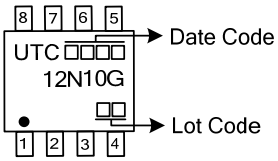

■ ABSOLUTE MAXIMUM RATINGS(T_C = 25°C, unless otherwise specified)

PARAMETER			SYMBOL	RATINGS	UNIT
Drain-Source Voltage (V_{GS}=0)			V_{DSS}	100	V
Gate-Source Voltage			V_{GSS}	±20	V
Drain Current	Continuous	T_C=25°C	I_D	12	A
		T_C=100°C		8.5	A
	Pulsed (Note 2)		I_{DM}	48	A
Power Dissipation	TO-220		P_D	73	W
	TO-251/TO-252			30	
	SOP-8			5	
Avalanche Energy (Note 3)			E_{AS}	100	mJ
Junction Temperature			T_J	+150	°C
Storage Temperature			T_{STG}	-55 ~ +150	°C

Notes: 1. Absolute maximum ratings are those values beyond which the device could be permanently damaged. Absolute maximum ratings are stress ratings only and functional device operation is not implied.
2. Pulse width limited by safe operating area
3. Starting T_J = 25°C, I_D = 12A, V_{DD} = 50V

■ THERMAL DATA

PARAMETER		SYMBOL	RATINGS	UNIT
Junction to Ambient	TO-220	θ_{JA}	62.5	°C/W
	TO-251/TO-252		100	
	SOP-8		75 (Note)	
Junction to Case	TO-220	θ_{JC}	1.71	°C/W
	TO-251/TO-252		4.1	
	SOP-8		25 (Note)	

Note: Device mounted on 1in^2 FR-4 board with 2oz. Copper, t = 10sec.

■ ELECTRICAL CHARACTERISTICS (T_C=25°C, unless otherwise specified)

PARAMETER		SYMBOL	TEST CONDITIONS	MIN	TYP	MAX	UNIT
OFF CHARACTERISTICS							
Drain-Source Breakdown Voltage		BV_{DSS}	I_D=250μA, V_{GS}=0V	100			V
Drain-Source Leakage Current		I_{DSS}	V_{DS}=Max rating, V_{GS}=0V			1	μA
Gate- Source Leakage Current	Forward	I_{GSS}	V_{GS}=+20V, V_{DS}=0V			+100	nA
	Reverse		V_{GS}=-20V, V_{DS}=0V			-100	nA
ON CHARACTERISTICS							
Gate Threshold Voltage		$V_{GS(TH)}$	V_{DS}=V_{GS}, I_D=250μA	1		3	V
Static Drain-Source On-State Resistance		$R_{DS(ON)}$	V_{GS}=10V, I_D=6A		0.15	0.18	Ω
DYNAMIC PARAMETERS							
Input Capacitance		C_{ISS}	V_{GS}=0V, V_{DS}=25V, f=1.0MHz		430		pF
Output Capacitance		C_{OSS}			90		pF
Reverse Transfer Capacitance		C_{RSS}			20		pF
SWITCHING PARAMETERS (Note 1,2)							
Total Gate Charge		Q_G	V_{GS}=10V, V_{DD}=80V, I_D=12A		7.5	10	nC
Gate to Source Charge		Q_{GS}			2.5		nC
Gate to Drain Charge		Q_{GD}			3.0		nC
Turn-ON Delay Time		$t_{D(ON)}$	V_{DD}=30V, I_D=1A, R_G=9.1Ω, V_{GS}=10V (Fig. 1)		12	24	ns
Rise Time		t_R			7	14	ns
Turn-OFF Delay Time		$t_{D(OFF)}$			18	35	ns
Fall-Time		t_F			3	6	ns
SOURCE- DRAIN DIODE RATINGS AND CHARACTERISTICS							
Maximum Body-Diode Continuous Current		I_S				12	A
Maximum Body-Diode Pulsed Current		I_{SM}				48	A
Drain-Source Diode Forward Voltage (Note 1)		V_{SD}	I_S=12A, V_{GS}=0V			1.2	V

Notes: 1. Pulse Test: Pulse width ≤ 300μs, Duty cycle≤2%.
2. Essentially independent of operating temperature

■ TEST CIRCUITS AND WAVEFORMS

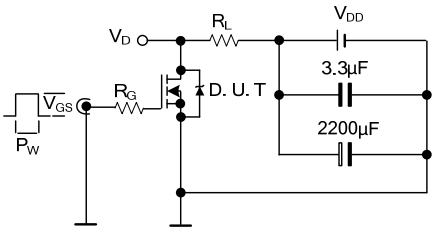

Fig. 1 Switching Times Test Circuit for Resistive Load

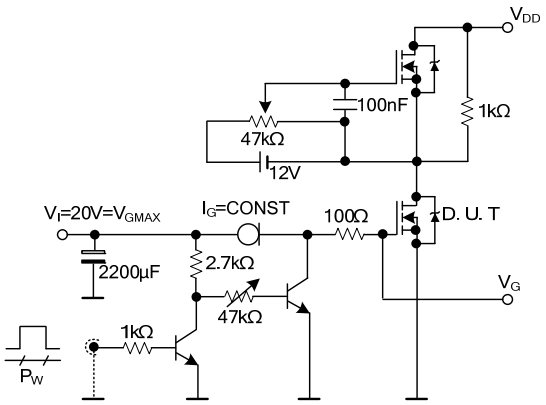

Fig. 2 Gate Charge Test Circuit

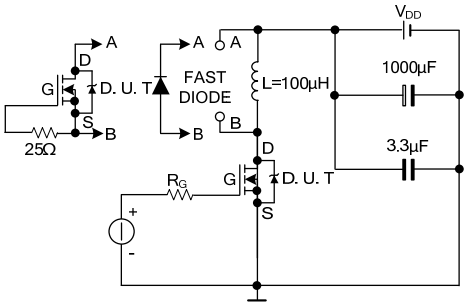

Fig. 3 Test Circuit for Inductive Load Switching and Diode Recovery Times

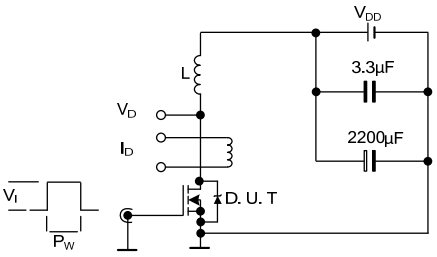

Fig. 4 Unclamped Inductive Load Test Circuit

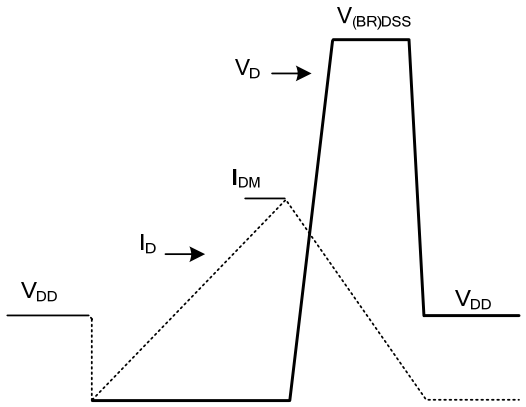

Fig. 5 Unclamped Inductive Waveform

■ TYPICAL CHARACTERISTICS

Drain Current vs. Source to Drain Voltage

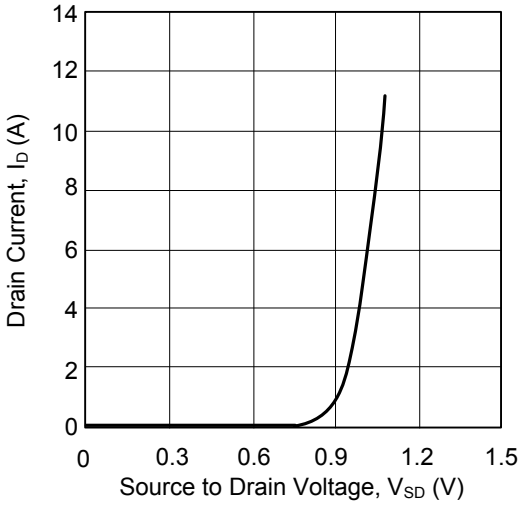

UTC assumes no responsibility for equipment failures that result from using products at values that exceed, even momentarily, rated values (such as maximum ratings, operating condition ranges, or other parameters) listed in products specifications of any and all UTC products described or contained herein. UTC products are not designed for use in life support appliances, devices or systems where malfunction of these products can be reasonably expected to result in personal injury. Reproduction in whole or in part is prohibited without the prior written consent of the copyright owner. The information presented in this document does not form part of any quotation or contract, is believed to be accurate and reliable and may be changed without notice.

ENTEGRECİ

Bu belge www.entegreci.com üzerinden sunulmaktadır.

Elektronik komponent tedarikinde Entegreci

Entegreci, Eskişehir merkezli, Türkiye geneline satış yapan bir elektronik komponent mağazasıdır. Entegreler (IC), mikrodenetleyiciler, transistörler, diyotlar, pasif elemanlar, konnektörler, modüller ve geliştirme kartları tek adetten seri üretim adetlerine kadar satılır. Ürün sayfalarında güncel stok durumunu, fiyatı ve datasheet bağlantısını bulabilirsiniz.

Parça koduyla arama

Üretici parça numarasını yazın; stok ve fiyatı hemen görün.

www.entegreci.com

Ürün kategorileri

Entegreden kapasitöre tüm elektronik komponent kategorileri.

Kategorilere göz atın

Üreticiler

Aradığınız üreticinin ürünlerini tek sayfada inceleyin.

Üreticileri görün

Toplu alım ve teklif

Listede olmayan ya da yüksek adetli parçalar için teklif isteyin.

Teklif isteyin

www.entegreci.com | **destek@entegreci.com** | **0850 305 90 34**

Entegreci is an online electronic components store based in Türkiye. Search by manufacturer part number to see stock, prices and datasheets for integrated circuits, microcontrollers, transistors, passive components and connectors, or request a quote for parts that are not listed.

Bu sayfa Entegreci tarafından eklenmiştir. Belgenin önceki sayfaları asıl yayıncısına aittir ve içeriği değiştirilmemiştir; en güncel sürüm için belgenin yayıncısına başvurun.