# 10N80-CQ

**Power MOSFET**

## 10A, 800V N-CHANNEL POWER MOSFET

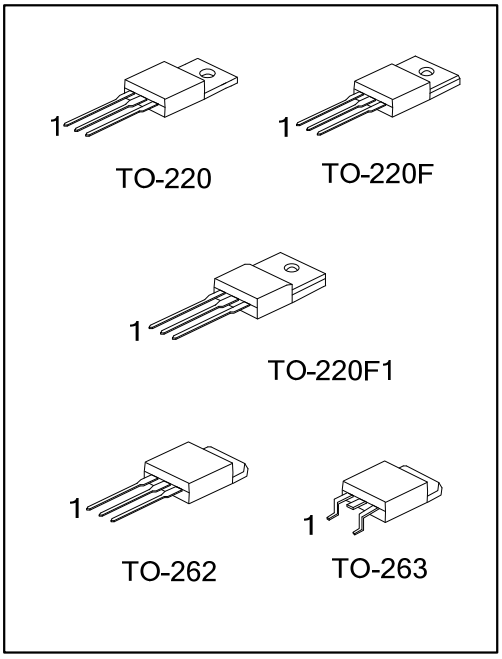


### ■ DESCRIPTION

The UTC **10N80-CQ** provide excellent $R_{DS(ON)}$, low gate charge and operation with low gate voltages. This device is suitable for use as a load switch or in PWM applications.

### ■ FEATURES

* $R_{DS(ON)} \leq 1.4\Omega$ @ $V_{GS}$=10V, $I_D$=5.0A
* Low Reverse Transfer Capacitance
* Fast Switching Capability
* Avalanche Energy Specified
* Improved dv/dt Capability, High Ruggedness

### ■ SYMBOL

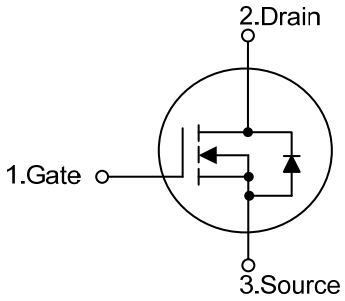


### ■ ORDERING INFORMATION

| Ordering Number | | Package | Pin Assignment | | | Packing |
|---|---|---|---|---|---|---|
| Lead Free | Halogen Free | | 1 | 2 | 3 | |
| 10N80L-TA3-T | 10N80G-TA3-T | TO-220 | G | D | S | Tube |
| 10N80L-TF1-T | 10N80G-TF1-T | TO-220F1 | G | D | S | Tube |
| 10N80L-TF3-T | 10N80G-TF3-T | TO-220F | G | D | S | Tube |
| 10N80L-T2Q-T | 10N80G-T2Q-T | TO-262 | G | D | S | Tube |
| 10N80L-TQ2-T | 10N80G-TQ2-T | TO-263 | G | D | S | Tube |
| 10N80L-TQ2-R | 10N80G-TQ2-R | TO-263 | G | D | S | Tape Reel |

Note: Pin Assignment: G: Gate D: Drain S: Source

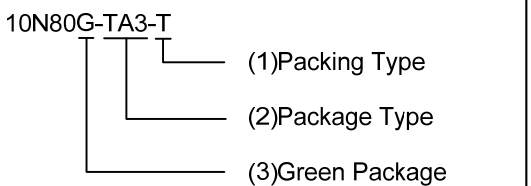


(1) T: Tube, R: Tape Reel
(2) TA3: TO-220, TF1: TO-220F1, TF3: TO-220F
T2Q: TO-262, TQ2: TO-263
(3) G: Halogen Free and Lead Free, L: Lead Free


Copyright © 2018 Unisonic Technologies Co., Ltd

## ■ MARKING

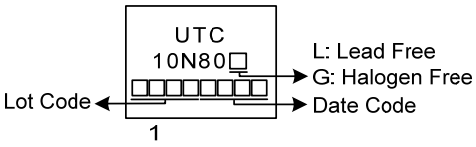

## ■ ABSOLUTE MAXIMUM RATINGS ($T_C$ = 25°C, unless otherwise specified)

| PARAMETER | | SYMBOL | RATINGS | UNIT |
|---|---|---|---|---|
| Drain-Source Voltage | | $V_{DSS}$ | 800 | V |
| Gate-Source Voltage | | $V_{GSS}$ | ±30 | V |
| Drain Current | Continuous | $I_D$ | 10 | A |
| | Pulsed (Note 2) | $I_{DM}$ | 40 | A |
| Avalanche Energy | Single Pulsed (Note 3) | $E_{AS}$ | 168 | mJ |
| Peak Diode Recovery dv/dt (Note 4) | | dv/dt | 1.5 | V/ns |
| Power Dissipation | TO-220/TO-262<br>TO-263 | $P_D$ | 145 | W |
| | TO-220F/TO-220F1 | | 30 | W |
| Junction Temperature | | $T_J$ | +150 | °C |
| Storage Temperature | | $T_{STG}$ | -55 ~ +150 | °C |

Notes: 1. Absolute maximum ratings are those values beyond which the device could be permanently damaged. Absolute maximum ratings are stress ratings only and functional device operation is not implied.
2. Repetitive Rating : Pulse width limited by maximum junction temperature.
3. L=10mH, $I_{AS}$=5.8A, $V_{DD}$=50V, $R_G$=25 Ω, Starting $T_J$ = 25°C
4. $I_{SD}$≤10A, di/dt≤200A/μs, $V_{DD}$ ≤ $BV_{DSS}$, Starting $T_J$ = 25°C

## ■ THERMAL CHARACTERISTICS

| PARAMETER | | SYMBOL | RATING | UNIT |
|---|---|---|---|---|
| Junction to Ambient | | $\theta_{JA}$ | 62.5 | °C/W |
| Junction to Case | TO-220/TO-262<br>TO-263 | $\theta_{JC}$ | 0.86 | °C/W |
| | TO-220F/TO-220F1 | | 4.2 | °C/W |

## ■ ELECTRICAL CHARACTERISTICS ($T_J$ =25°C, unless otherwise specified)

| PARAMETER | SYMBOL | TEST CONDITIONS | MIN | TYP | MAX | UNIT |
|---|---|---|---|---|---|---|
| **OFF CHARACTERISTICS** | | | | | | |
| Drain-Source Breakdown Voltage | $BV_{DSS}$ | $V_{GS}$=0V, $I_D$=250μA | 800 | | | V |
| Drain-Source Leakage Current | $I_{DSS}$ | $V_{DS}$=800V, $V_{GS}$=0V | | | 10 | μA |
| Gate-Source Leakage Current | $I_{GSS}$ | $V_{GS}$=±30V, $V_{DS}$=0V | | | ±10 | μA |
| **ON CHARACTERISTICS** | | | | | | |
| Gate Threshold Voltage | $V_{GS(TH)}$ | $V_{DS}$=$V_{GS}$, $I_D$=250μA | 3.0 | | 5.0 | V |
| Static Drain-Source On-State Resistance | $R_{DS(ON)}$ | $V_{GS}$=10V, $I_D$=5.0A | | 1.25 | 1.4 | Ω |
| **DYNAMIC CHARACTERISTICS** | | | | | | |
| Input Capacitance | $C_{ISS}$ | $V_{DS}$=25V, $V_{GS}$=0V, f=1MHz | | 1300 | | pF |
| Output Capacitance | $C_{OSS}$ | | | 150 | | pF |
| Reverse Transfer Capacitance | $C_{RSS}$ | | | 15 | | pF |
| **SWITCHING CHARACTERISTICS** | | | | | | |
| Total Gate Charge (Note 1) | $Q_G$ | $V_{DS}$=100V, $V_{GS}$=10V, $I_D$=10A $I_G$=1mA (Note 1, 2) | | 37 | | nC |
| Gate-Source Charge | $Q_{GS}$ | | | 8.5 | | nC |
| Gate-Drain Charge | $Q_{GD}$ | | | 11 | | nC |
| Turn-On Delay Time (Note 1) | $t_{D(ON)}$ | $V_{DD}$=100V, $V_{GS}$=10V, $I_D$ =10A, $R_G$ =25Ω (Note 1, 2) | | 23 | | ns |
| Turn-On Rise Time | $t_R$ | | | 21 | | ns |
| Turn-Off Delay Time | $t_{D(OFF)}$ | | | 102 | | ns |
| Turn-Off Fall Time | $t_F$ | | | 47 | | ns |
| **SOURCE- DRAIN DIODE RATINGS AND CHARACTERISTICS** | | | | | | |
| Maximum Continuous Drain-Source Diode Forward Current | $I_S$ | | | | 10 | A |
| Maximum Pulsed Drain-Source Diode Forward Current | $I_{SM}$ | | | | 40 | A |
| Drain-Source Diode Forward Voltage (Note 1) | $V_{SD}$ | $I_S$=10A, $V_{GS}$=0V | | | 1.4 | V |
| Body Diode Reverse Recovery Time (Note 1) | $t_{rr}$ | $I_S$=10A, $V_{GS}$=0V, $dI_F/dt$=100A/μs | | 545 | | nS |
| Body Diode Reverse Recovery Charge | $Q_{rr}$ | | | 8 | | μC |

Notes: 1. Pulse Test: Pulse width ≤ 300μs, Duty cycle≤2%.
2. Essentially independent of operating temperature.

## ■ TEST CIRCUITS AND WAVEFORMS

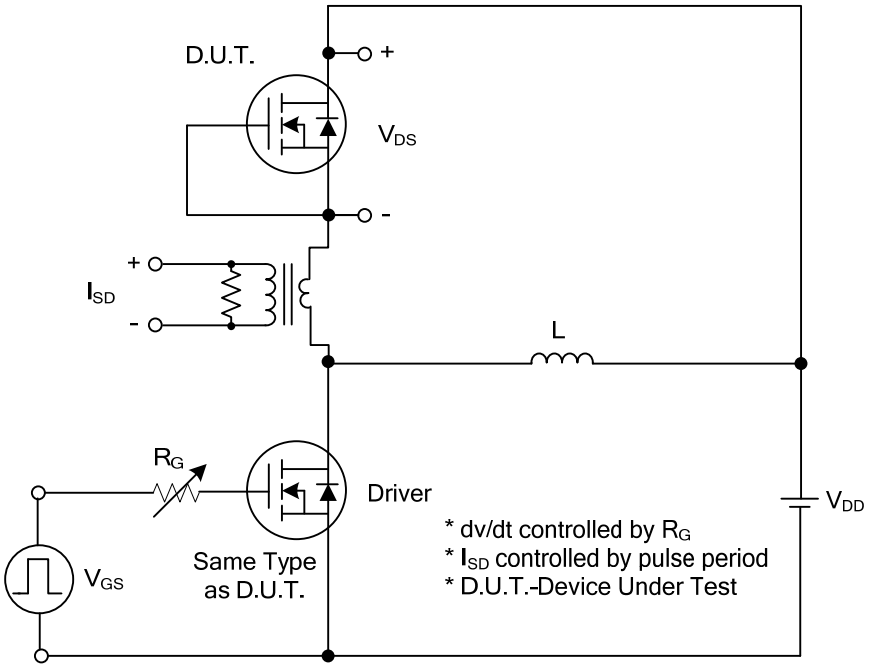


**Peak Diode Recovery dv/dt Test Circuit**

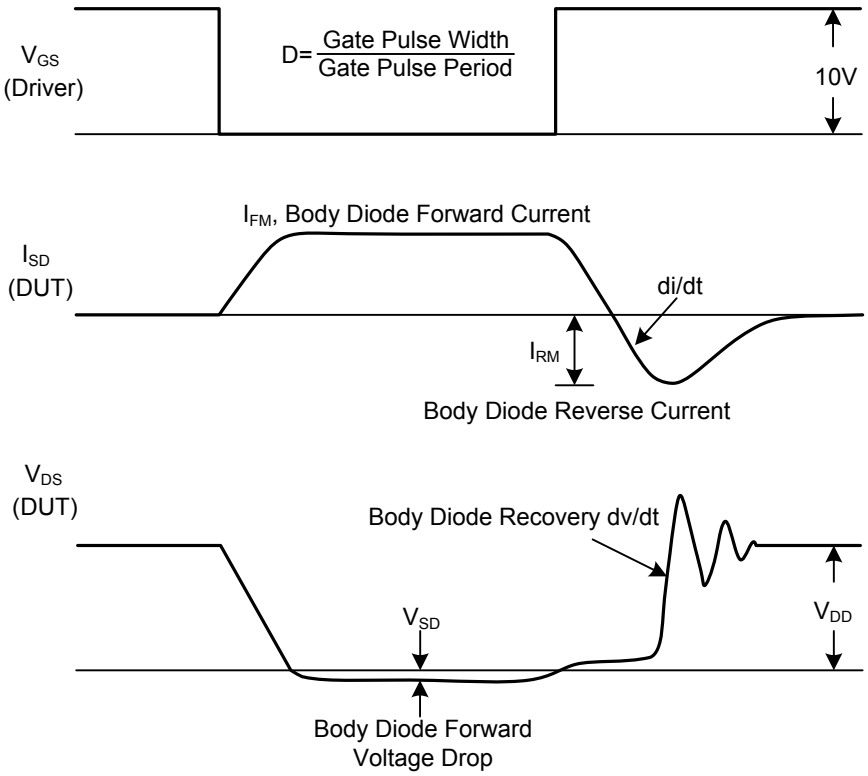


**Peak Diode Recovery dv/dt Waveforms**

## ■ TEST CIRCUITS AND WAVEFORMS

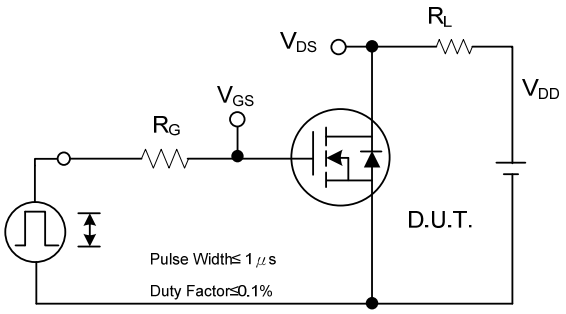


Switching Test Circuit

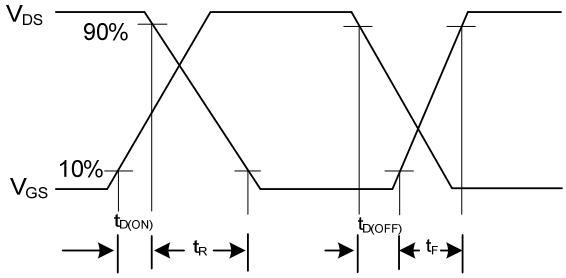


Switching Waveforms

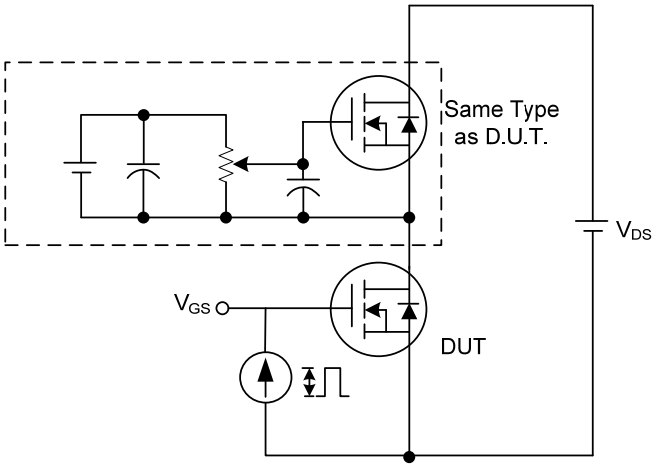


Gate Charge Test Circuit

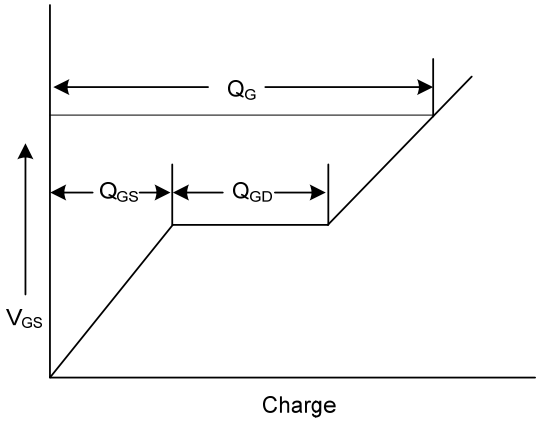


Gate Charge Waveform

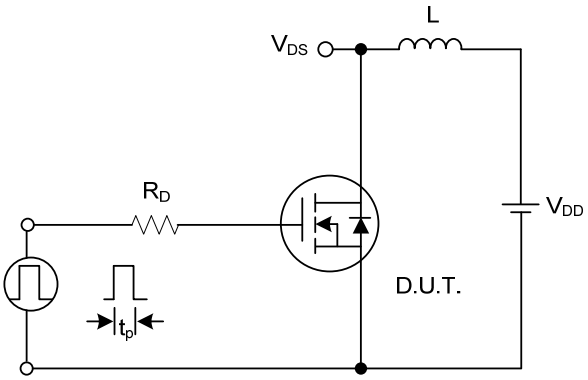


Unclamped Inductive Switching Test Circuit

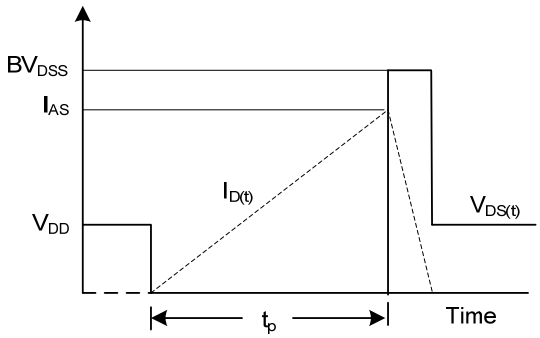


Unclamped Inductive Switching Waveforms

## ■ TYPICAL CHARACTERISTICS

Drain Current vs. Drain-Source Voltage

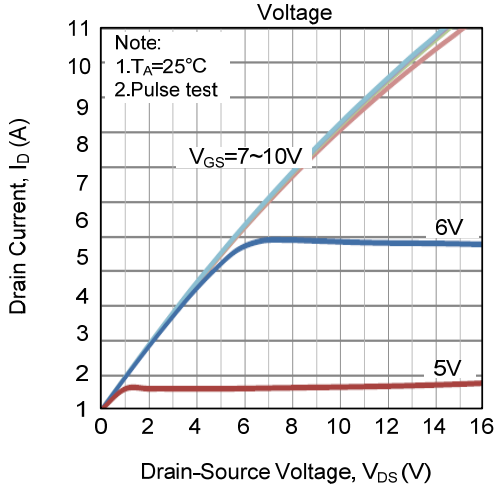


Drain-Source On-Resistance vs. Gate-Source Voltage

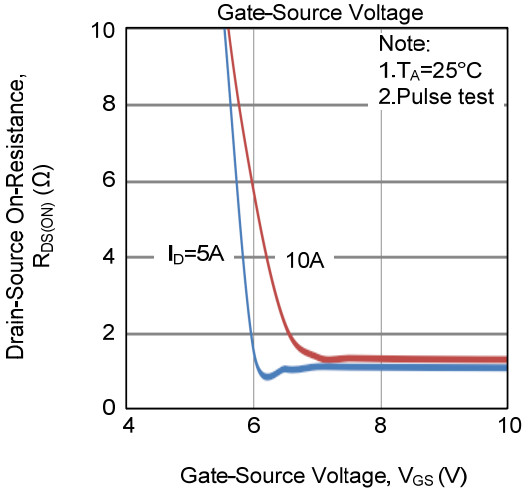


Gate Charge Characteristics

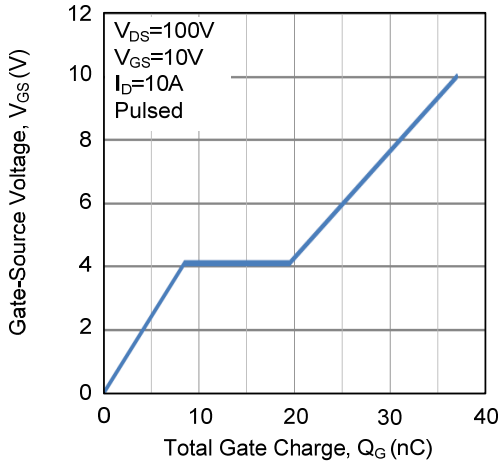


Capacitance Characteristics

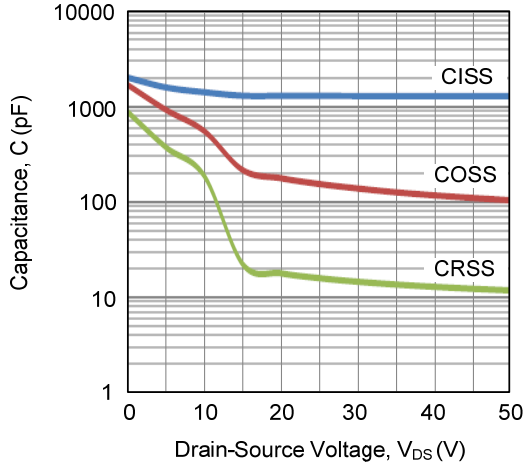


Drain-Source On-Resistance vs. Junction Temperature

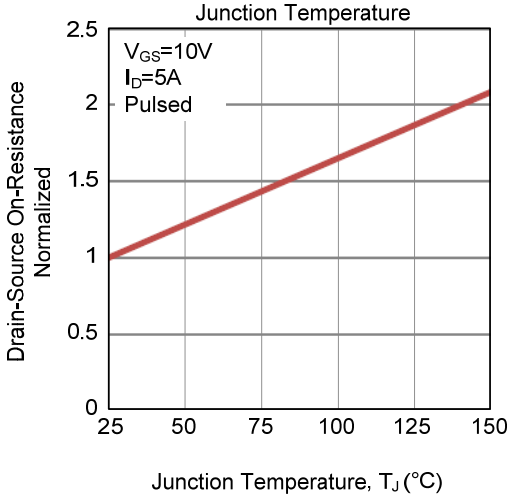


Breakdown Voltage vs. Junction Temperature

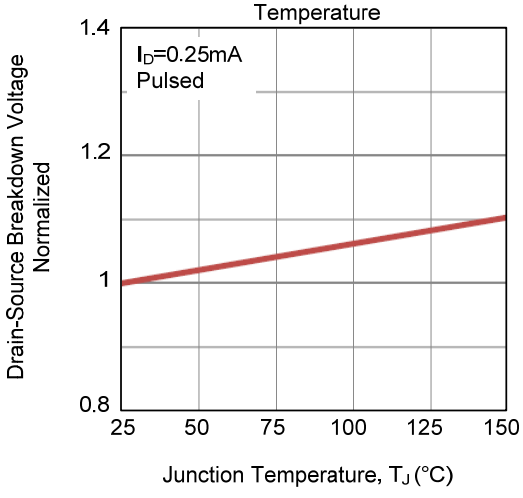

## ■ TYPICAL CHARACTERISTICS (Cont.)

Gate Threshold Voltage vs. Junction Temperature

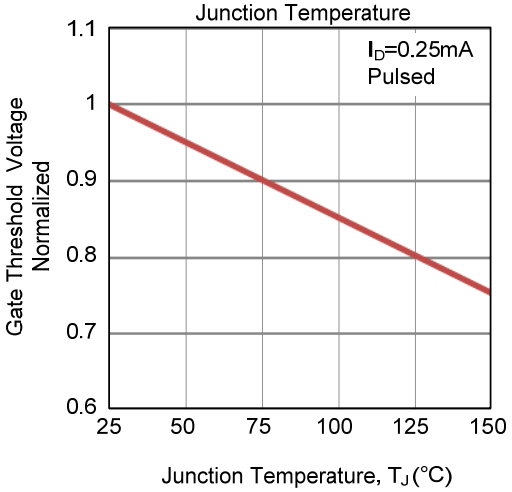


Source Current vs. Source-Drain Voltage

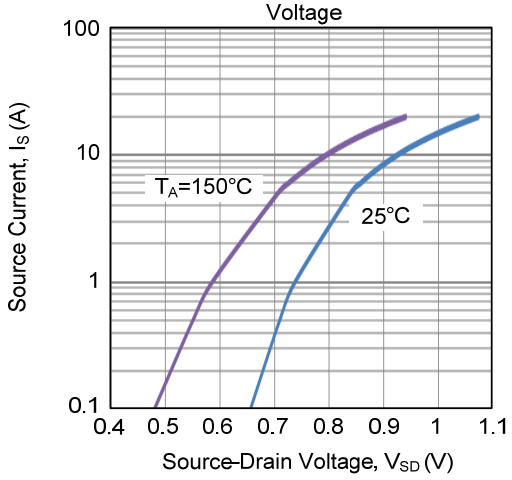


Drain Current vs. Gate-Source Voltage

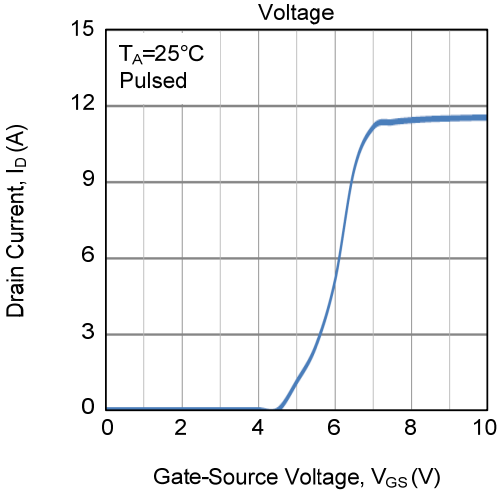


Drain-Source On-Resistance vs. Drain Current

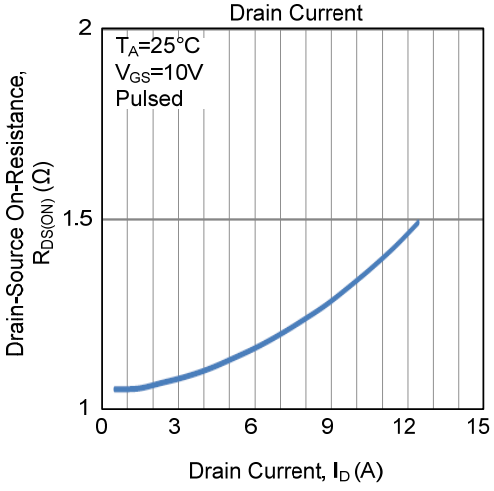


Power Dissipation vs. Junction Temperature

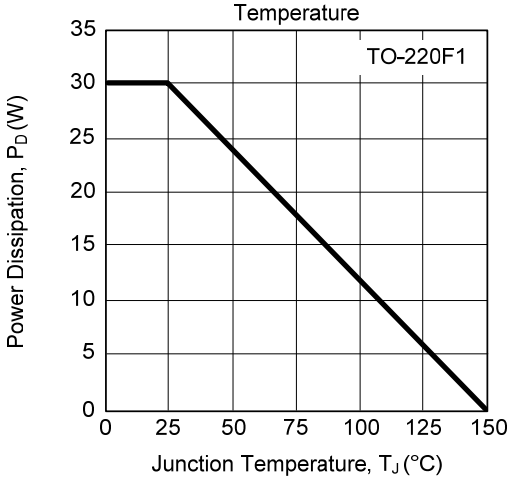


Drain Current vs. Case Temperature

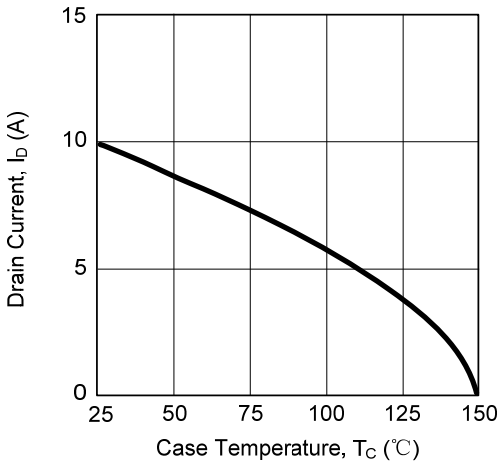

## ■ TYPICAL CHARACTERISTICS (Cont.)

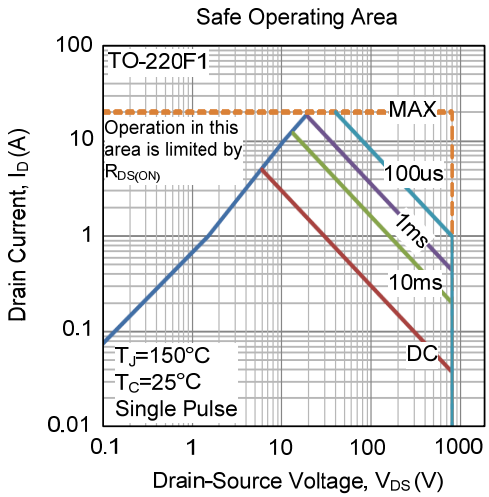


UTC assumes no responsibility for equipment failures that result from using products at values that exceed, even momentarily, rated values (such as maximum ratings, operating condition ranges, or other parameters) listed in products specifications of any and all UTC products described or contained herein. UTC products are not designed for use in life support appliances, devices or systems where malfunction of these products can be reasonably expected to result in personal injury. Reproduction in whole or in part is prohibited without the prior written consent of the copyright owner. UTC reserves the right to make changes to information published in this document, including without limitation specifications and product descriptions, at any time and without notice. This document supersedes and replaces all information supplied prior to the publication hereof.

ENTEGRECİ

Bu belge www.entegreci.com üzerinden sunulmaktadır.

# Elektronik komponent tedarikinde Entegreci

Entegreci, Eskişehir merkezli, Türkiye geneline satış yapan bir elektronik komponent mağazasıdır. Entegreler (IC), mikrodenetleyiciler, transistörler, diyotlar, pasif elemanlar, konnektörler, modüller ve geliştirme kartları tek adetten seri üretim adetlerine kadar satılır. Ürün sayfalarında güncel stok durumunu, fiyatı ve datasheet bağlantısını bulabilirsiniz.

### Parça koduyla arama

Üretici parça numarasını yazın; stok ve fiyatı hemen görün.

**www.entegreci.com**

### Ürün kategorileri

Entegreden kapasitöre tüm elektronik komponent kategorileri.

**Kategorilere göz atın**

### Üreticiler

Aradığınız üreticinin ürünlerini tek sayfada inceleyin.

**Üreticileri görün**

### Toplu alım ve teklif

Listede olmayan ya da yüksek adetli parçalar için teklif isteyin.

**Teklif isteyin**

**www.entegreci.com** | **destek@entegreci.com** | **0850 305 90 34**

Entegreci is an online electronic components store based in Türkiye. Search by manufacturer part number to see stock, prices and datasheets for integrated circuits, microcontrollers, transistors, passive components and connectors, or request a quote for parts that are not listed.

Bu sayfa Entegreci tarafından eklenmiştir. Belgenin önceki sayfaları asıl yayıncısına aittir ve içeriği değiştirilmemiştir; en güncel sürüm için belgenin yayıncısına başvurun.