# 10N65-TC

**Power MOSFET**

## 10A, 650V N-CHANNEL POWER MOSFET

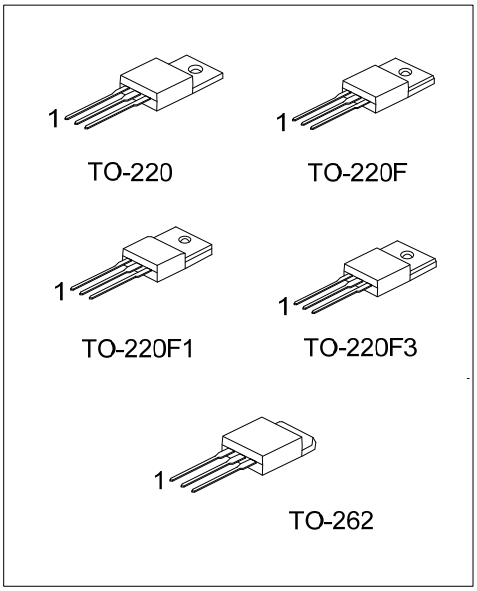


### ■ DESCRIPTION

The **UTC 10N65-TC** is a high voltage and high current power MOSFET, designed to have better characteristics, such as fast switching time, low gate charge, low on-state resistance and a high rugged avalanche characteristics. This power MOSFET is usually used at high speed switching applications in power supplies, PWM motor controls, high efficient AC to DC converters and bridge circuits.

### ■ FEATURES

* $R_{DS(ON)} \leq 0.9\ \Omega$ @ $V_{GS}$=10V, $I_D$=5.0A
* Fast switching
* Improved dv/dt capability

### ■ SYMBOL

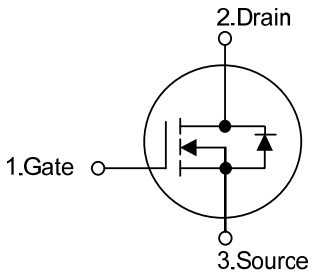


### ■ ORDERING INFORMATION

| Ordering Number | | Package | Pin Assignment | | | Packing |
|---|---|---|---|---|---|---|
| Lead Free | Halogen-Free | | 1 | 2 | 3 | |
| 10N65L-TA3-T | 10N65G-TA3-T | TO-220 | G | D | S | Tube |
| 10N65L-TF1-T | 10N65G-TF1-T | TO-220F1 | G | D | S | Tube |
| 10N65L-TF3-T | 10N65G-TF3-T | TO-220F | G | D | S | Tube |
| 10N65L-TF3T-T | 10N65G-TF3T-T | TO-220F3 | G | D | S | Tube |
| 10N65L-T2Q-T | 10N65G-T2Q-T | TO-262 | G | D | S | Tube |

Note: Pin Assignment: G: Gate D: Drain S: Source

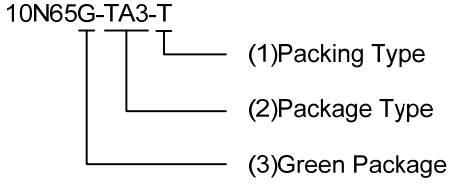


(1) T: Tube
(2) TA3: TO-220, TF1: TO-220F1, TF3: TO-220F, TF3T: TO-220F3, T2Q: TO-262
(3) G: Halogen Free and Lead Free, L: Lead Free


Copyright © 2019 Unisonic Technologies Co., Ltd

## ■ MARKING

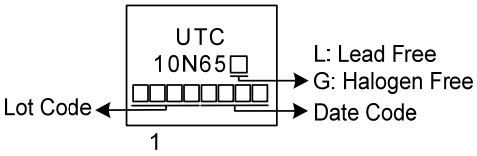

## ■ ABSOLUTE MAXIMUM RATINGS ($T_C$ = 25°C, unless otherwise specified)

| PARAMETER | | SYMBOL | RATINGS | UNIT |
|---|---|---|---|---|
| Drain-Source Voltage | | $V_{DSS}$ | 650 | V |
| Gate-Source Voltage | | $V_{GSS}$ | ± 30 | V |
| Drain Current | Continuous | $I_D$ | 10 | A |
| | Pulsed (Note 2) | $I_{DM}$ | 20 | A |
| Avalanche Energy | Single Pulsed (Note 3) | $E_{AS}$ | 840 | mJ |
| Peak Diode Recovery dv/dt (Note 4) | | dv/dt | 2.94 | V/ns |
| Power Dissipation | TO-220/TO-262 | $P_D$ | 155 | W |
| | TO-220F/TO-220F1<br>TO-220F3 | | 38 | W |
| Junction Temperature | | $T_J$ | +150 | °C |
| Storage Temperature | | $T_{STG}$ | -55 ~ +150 | °C |

Notes: 1. Absolute maximum ratings are those values beyond which the device could be permanently damaged. Absolute maximum ratings are stress ratings only and functional device operation is not implied.
2. Repetitive Rating: Pulse width limited by maximum junction temperature.
3. L = 100mH$V_{DD}$ = 50V, $R_G$ = 25 Ω Starting $T_J$ = 25°C
4. $I_{SD}$ ≤ 10A, di/dt ≤200A/μs, $V_{DD}$ ≤$BV_{DSS}$, Starting $T_J$ = 25°C

## ■ THERMAL DATA

| PARAMETER | | SYMBOL | RATINGS | UNIT |
|---|---|---|---|---|
| Junction to Ambient | | $\theta_{JA}$ | 62.5 | °C/W |
| Junction to Case | TO-220/TO-262 | $\theta_{JC}$ | 0.8 | °C/W |
| | TO-220F/TO-220F1<br>TO-220F3 | | 3.28 | °C/W |

## ■ ELECTRICAL CHARACTERISTICS ($T_J$ = 25°C, unless otherwise specified)

| PARAMETER | | SYMBOL | TEST CONDITIONS | MIN | TYP | MAX | UNIT |
|---|---|---|---|---|---|---|---|
| **OFF CHARACTERISTICS** | | | | | | | |
| Drain-Source Breakdown Voltage | | $BV_{DSS}$ | $V_{GS}$=0V, $I_D$= 250μA | 650 | | | V |
| Drain-Source Leakage Current | | $I_{DSS}$ | $V_{DS}$=650V, $V_{GS}$=0V | | | 10 | μA |
| Gate-Source Leakage Current | Forward | $I_{GSS}$ | $V_{GS}$=30V, $V_{DS}$=0V | | | 100 | nA |
| | Reverse | | $V_{GS}$=-30V, $V_{DS}$=0V | | | -100 | nA |
| **ON CHARACTERISTICS** | | | | | | | |
| Gate Threshold Voltage | | $V_{GS(TH)}$ | $V_{DS}$=$V_{GS}$, $I_D$=250μA | 2.0 | | 4.0 | V |
| Static Drain-Source On-State Resistance | | $R_{DS(ON)}$ | $V_{GS}$=10V, $I_D$=5.0A | | 0.75 | 0.9 | Ω |
| **DYNAMIC CHARACTERISTICS** | | | | | | | |
| Input Capacitance | | $C_{ISS}$ | $V_{GS}$=0V, $V_{DS}$=25V, f=1.0 MHz | | 1554 | | pF |
| Output Capacitance | | $C_{OSS}$ | | | 158 | | pF |
| Reverse Transfer Capacitance | | $C_{RSS}$ | | | 4.4 | | pF |
| **SWITCHING CHARACTERISTICS** | | | | | | | |
| Total Gate Charge (Note 1) | | $Q_G$ | $V_{DS}$=520V, $V_{GS}$=10V, $I_D$=10A $I_G$=1mA (Note 1, 2) | | 34 | | nC |
| Gateource Charge | | $Q_{GS}$ | | | 12 | | nC |
| Gate-Drain Charge | | $Q_{GD}$ | | | 7.4 | | nC |
| Turn-on Delay Time (Note 1) | | $t_{D(ON)}$ | $V_{DS}$=325V, $V_{GS}$=10V, $I_D$=10A, $R_G$=25Ω (Note 1, 2) | | 26 | | ns |
| Rise Time | | $t_R$ | | | 21 | | ns |
| Turn-off Delay Time | | $t_{D(OFF)}$ | | | 80 | | ns |
| Fall-Time | | $t_F$ | | | 23 | | ns |
| **SOURCE- DRAIN DIODE RATINGS AND CHARACTERISTICS** | | | | | | | |
| Maximum Body-Diode Continuous Current | | $I_S$ | | | | 10 | A |
| Maximum Body-Diode Pulsed Current | | $I_{SM}$ | | | | 40 | A |
| Drain-Source Diode Forward Voltage (Note 1) | | $V_{SD}$ | $V_{GS}$=0V, $I_S$=10A | | | 1.4 | V |
| Reverse Recovery Time (Note 1) | | $t_{rr}$ | $V_{GS}$=0V, $I_S$=10A, $dI_F/dt$=100A/μs (Note1) | | 375 | | ns |
| Reverse Recovery Charge | | $Q_{rr}$ | | | 5.2 | | μC |

Notes: 1. Pulse Test : Pulse width ≤ 300μs, Duty cycle ≤ 2%.
2. Essentially independent of operating temperature.

## ■ TEST CIRCUITS AND WAVEFORMS

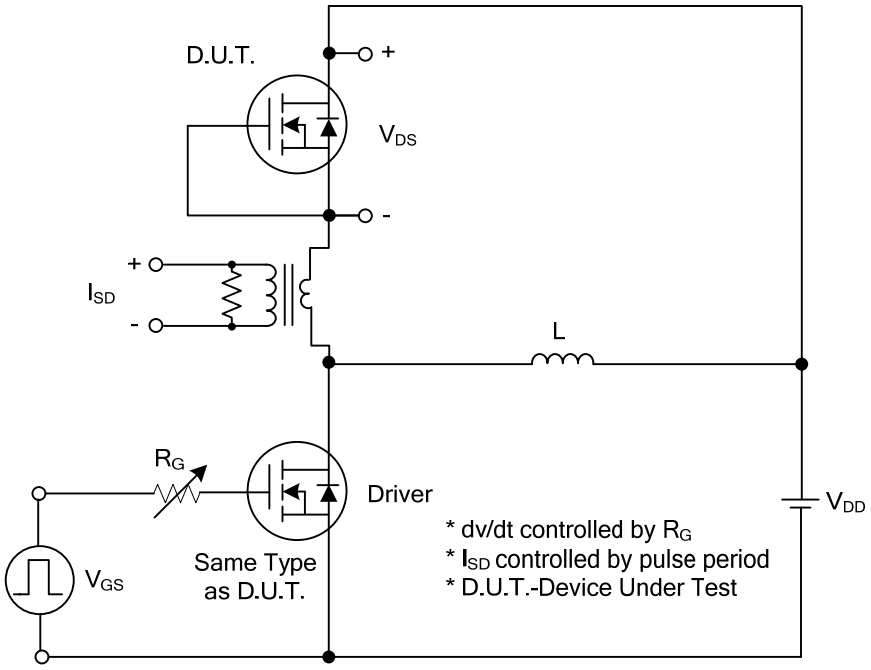


**Peak Diode Recovery dv/dt Test Circuit**

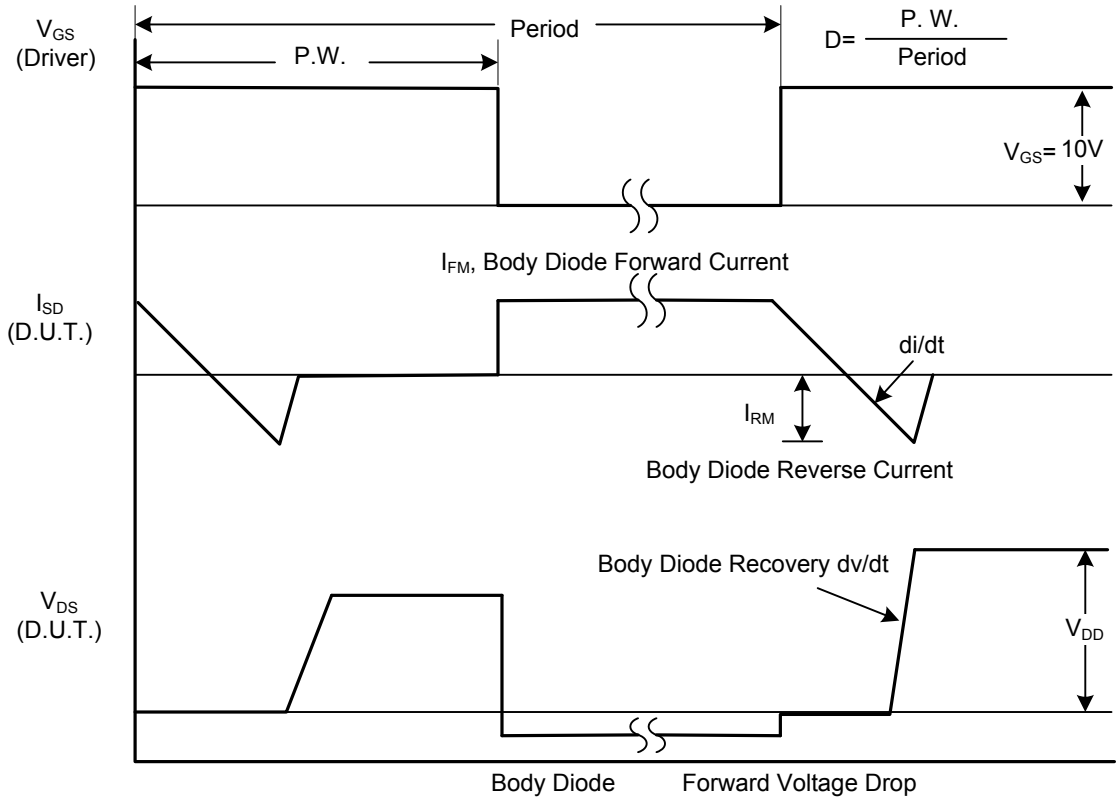


**Peak Diode Recovery dv/dt Waveforms**

## ■ TEST CIRCUITS AND WAVEFORMS

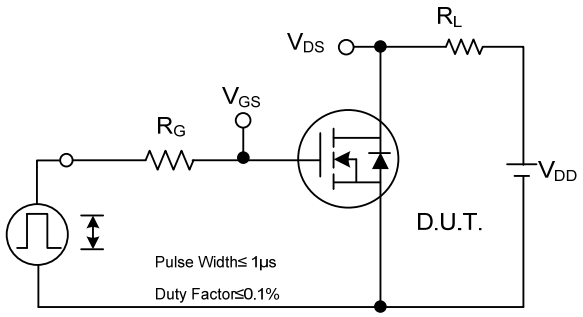


**Switching Test Circuit**

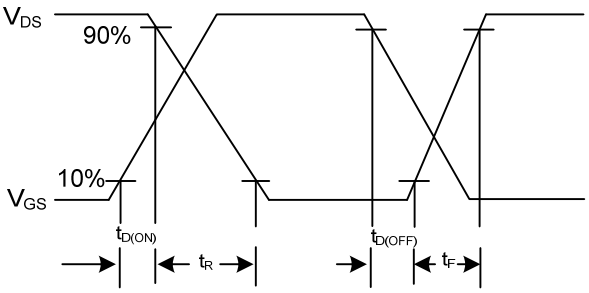


**Switching Waveforms**

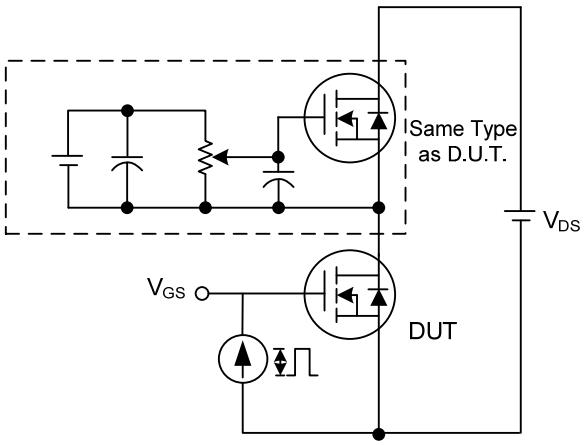


**Gate Charge Test Circuit**

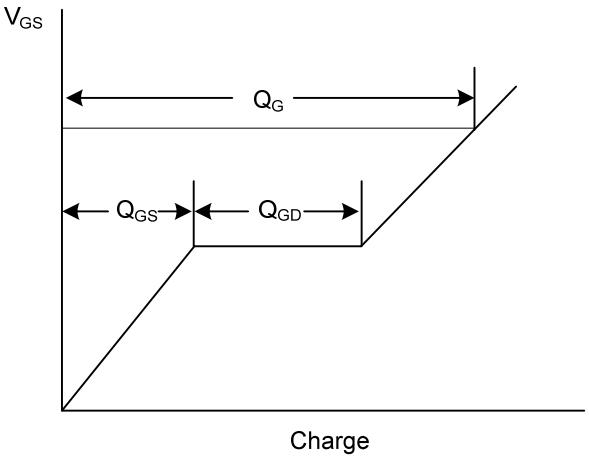


**Gate Charge Waveform**

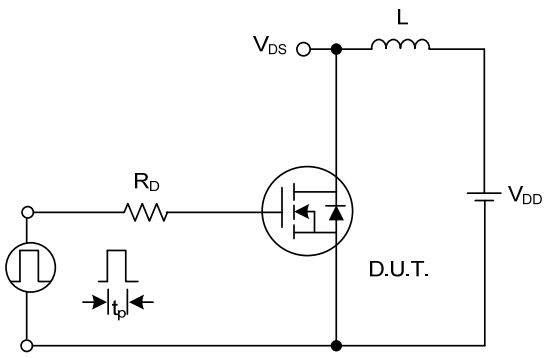


**Unclamped Inductive Switching Test Circuit**

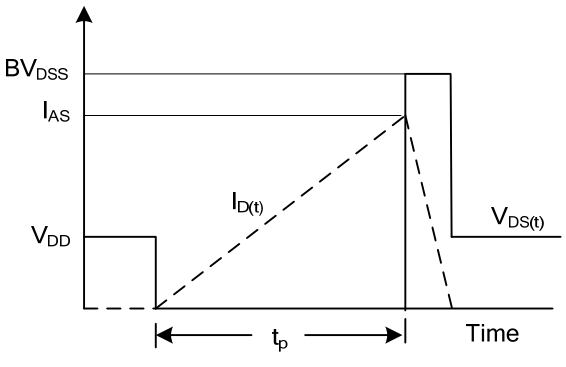


**Unclamped Inductive Switching Waveforms**

## ■ TYPICAL CHARACTERISTICS

Drain Current vs. Drain-Source Voltage

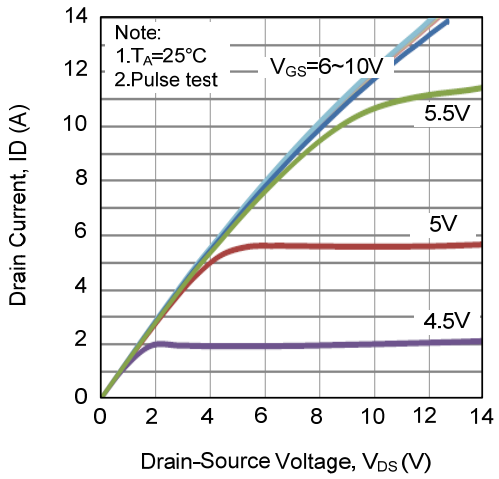


Drain-Source On-Resistance vs. Gate-Source Voltage

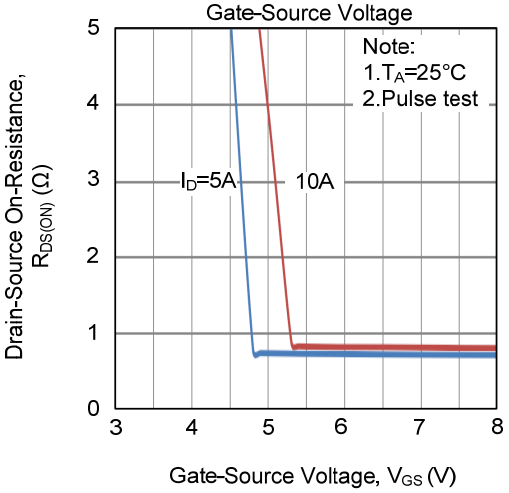


Gate Charge Characteristics

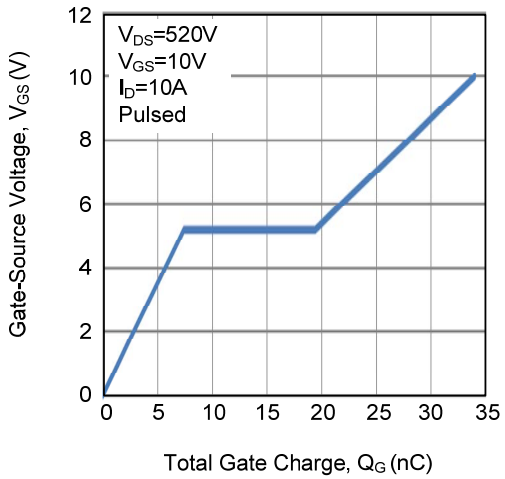


Capacitance Characteristics

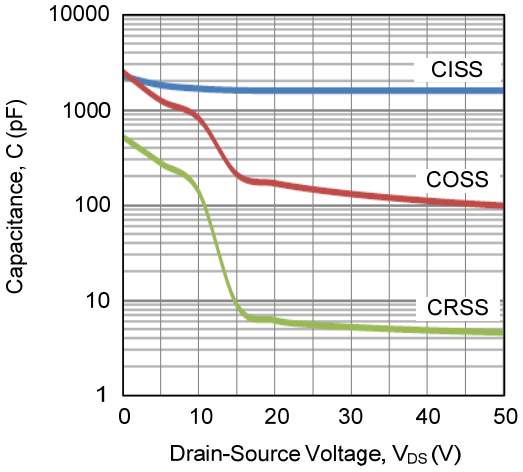


Drain-Source On-Resistance vs. Junction Temperature

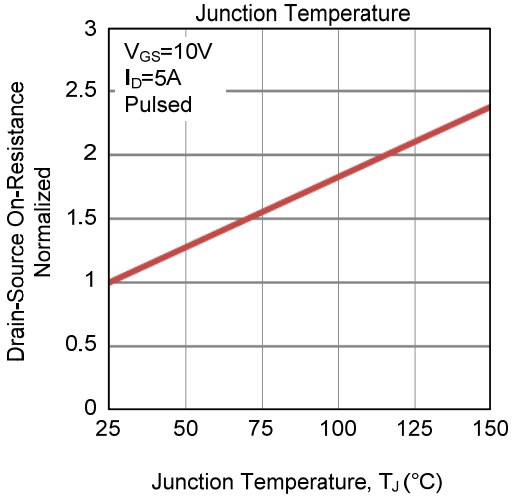


Breakdown Voltage vs. Junction Temperature

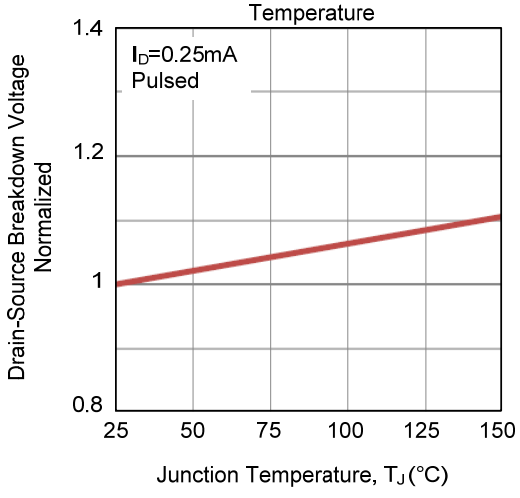

## ■ TYPICAL CHARACTERISTICS (Cont.)

Gate Threshold Voltage vs. Junction Temperature

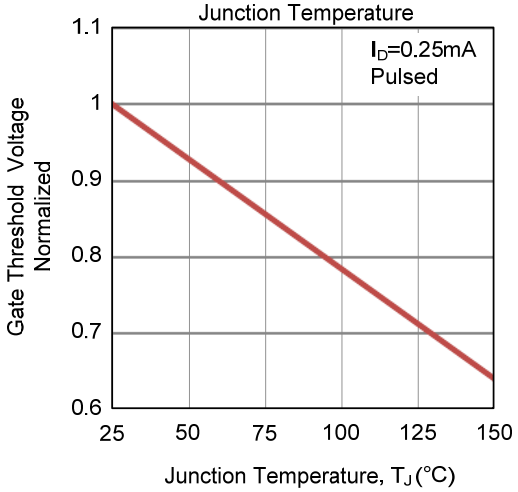


Source Current vs. Source-Drain Voltage

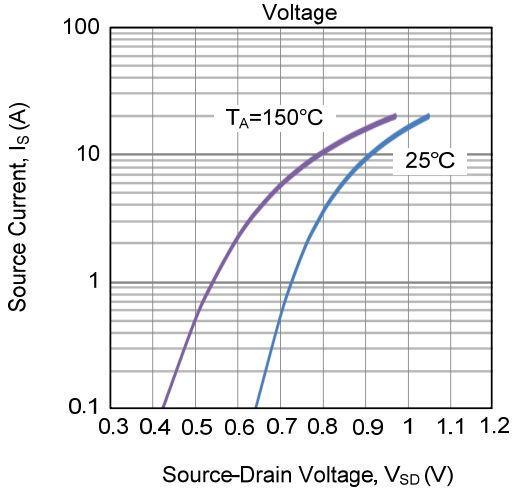


Drain Current vs. Gate-Source Voltage

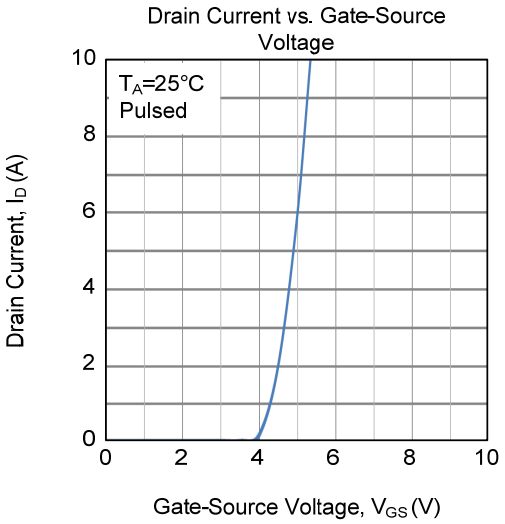


Drain-Source On-Resistance vs. Drain Current

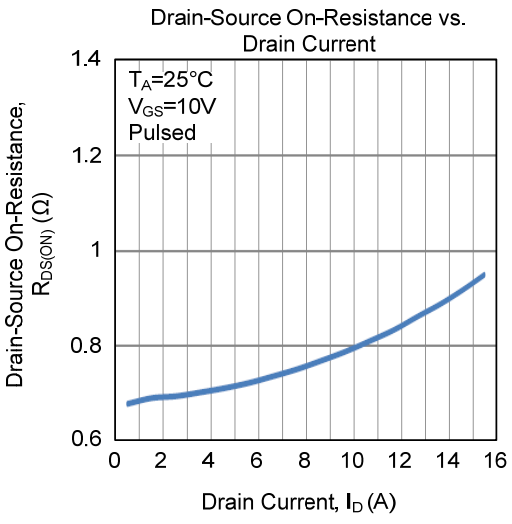


Power Dissipation vs. Junction Temperature

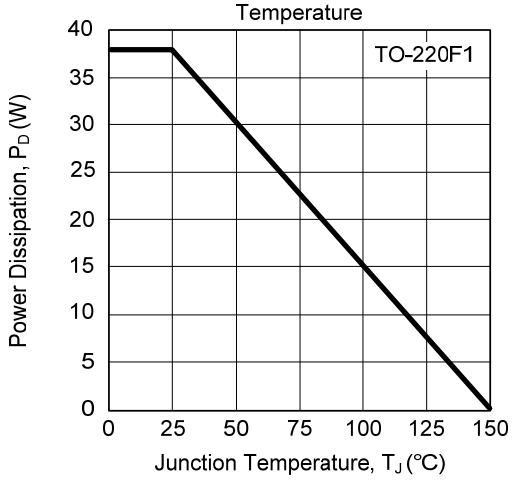


Drain Current vs. Junction Temperature

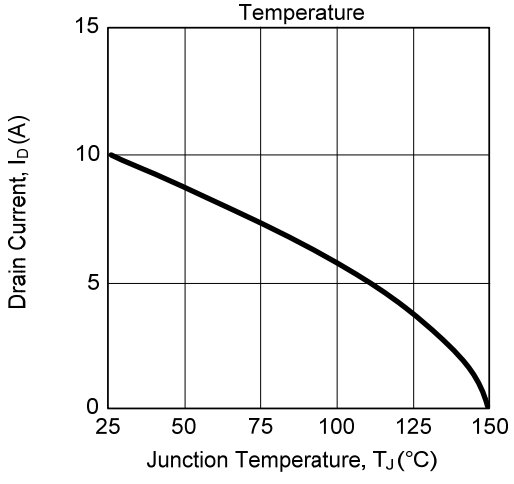

## ■ TYPICAL CHARACTERISTICS (Cont.)

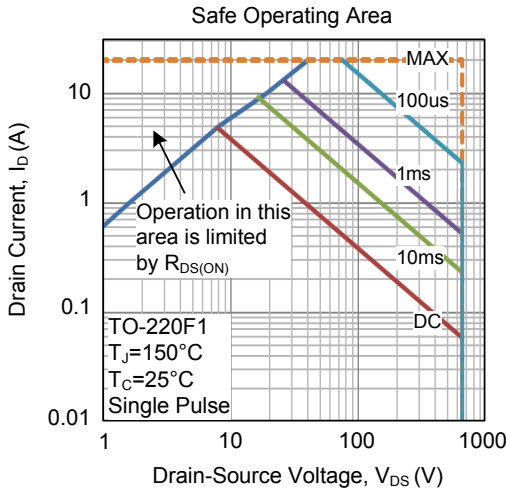


UTC assumes no responsibility for equipment failures that result from using products at values that exceed, even momentarily, rated values (such as maximum ratings, operating condition ranges, or other parameters) listed in products specifications of any and all UTC products described or contained herein. UTC products are not designed for use in life support appliances, devices or systems where malfunction of these products can be reasonably expected to result in personal injury. Reproduction in whole or in part is prohibited without the prior written consent of the copyright owner. UTC reserves the right to make changes to information published in this document, including without limitation specifications and product descriptions, at any time and without notice. This document supersedes and replaces all information supplied prior to the publication hereof.

ENTEGRECİ

Bu belge www.entegreci.com üzerinden sunulmaktadır.

# Elektronik komponent tedarikinde Entegreci

Entegreci, Eskişehir merkezli, Türkiye geneline satış yapan bir elektronik komponent mağazasıdır. Entegreler (IC), mikrodenetleyiciler, transistörler, diyotlar, pasif elemanlar, konnektörler, modüller ve geliştirme kartları tek adetten seri üretim adetlerine kadar satılır. Ürün sayfalarında güncel stok durumunu, fiyatı ve datasheet bağlantısını bulabilirsiniz.

### Parça koduyla arama

Üretici parça numarasını yazın; stok ve fiyatı hemen görün.

**www.entegreci.com**

### Ürün kategorileri

Entegreden kapasitöre tüm elektronik komponent kategorileri.

**Kategorilere göz atın**

### Üreticiler

Aradığınız üreticinin ürünlerini tek sayfada inceleyin.

**Üreticileri görün**

### Toplu alım ve teklif

Listede olmayan ya da yüksek adetli parçalar için teklif isteyin.

**Teklif isteyin**

**www.entegreci.com** | **destek@entegreci.com** | **0850 305 90 34**

Entegreci is an online electronic components store based in Türkiye. Search by manufacturer part number to see stock, prices and datasheets for integrated circuits, microcontrollers, transistors, passive components and connectors, or request a quote for parts that are not listed.

Bu sayfa Entegreci tarafından eklenmiştir. Belgenin önceki sayfaları asıl yayıncısına aittir ve içeriği değiştirilmemiştir; en güncel sürüm için belgenin yayıncısına başvurun.