10N65-ML

Power MOSFET

10A, 650V N-CHANNEL POWER MOSFET

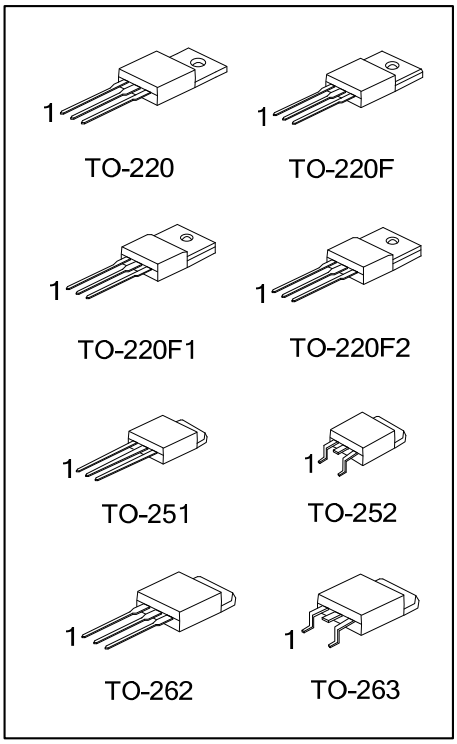

■ DESCRIPTION

The UTC **10N65-ML** is a high voltage power MOSFET combines advanced trench MOSFET designed to have better characteristics, such as fast switching time, low gate charge, low on-state resistance and high rugged avalanche characteristics. This power MOSFET is usually used in high speed switching applications of switching power supplies and adaptors.

■ FEATURES

* $R_{DS(ON)} \leq 1.0\ \Omega$ @ V_{GS}=10V, I_D=5.0A
* Fast switching capability
* Avalanche energy tested
* Improved dv/dt capability, high ruggedness

■ SYMBOL

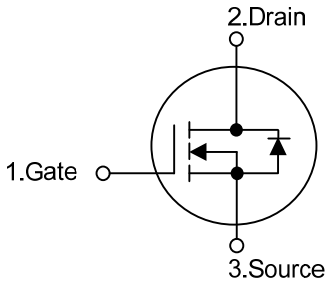

Copyright © 2021 Unisonic Technologies Co., Ltd

■ ORDERING INFORMATION

Ordering Number		Package	Pin Assignment			Packing
Lead Free	Halogen Free		1	2	3	
10N65L-TA3-T	10N65G-TA3-T	TO-220	G	D	S	Tube
10N65L-TF1-T	10N65G-TF1-T	TO-220F1	G	D	S	Tube
10N65L-TF2-T	10N65G-TF2-T	TO-220F2	G	D	S	Tube
10N65L-TF3-T	10N65G-TF3-T	TO-220F	G	D	S	Tube
10N65L-TM3-T	10N65G-TM3-T	TO-251	G	D	S	Tube
10N65L-TN3-R	10N65G-TN3-R	TO-252	G	D	S	Tape Reel
10N65L-T2Q-T	10N65G-T2Q-T	TO-262	G	D	S	Tube
10N65L-T2Q-R	10N65G-T2Q-R	TO-262	G	D	S	Tape Reel
10N65L-TQ2-T	10N65G-TQ2-T	TO-263	G	D	S	Tube
10N65L-TQ2-R	10N65G-TQ2-R	TO-263	G	D	S	Tape Reel

Note: Pin Assignment: G: Gate D: Drain S: Source

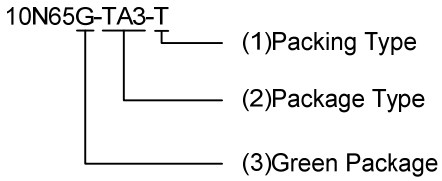

(1) T: Tube, R: Tape Reel
(2) TA3: TO-220, TF1: TO-220F1, TF2: TO-220F2
TF3: TO-220F, TM3: TO-251, TN3: TO-252
T2Q: TO-262, TQ2: TO-263
(3) G: Halogen Free and Lead Free, L: Lead Free

■ MARKING

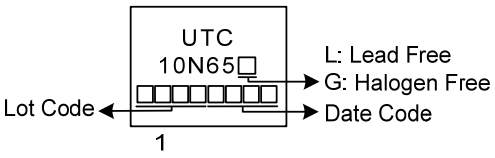

■ ABSOLUTE MAXIMUM RATINGS (T_C=25°C, unless otherwise specified)

PARAMETER		SYMBOL	RATINGS	UNIT
Drain-Source Voltage		V_{DSS}	650	V
Gate-Source Voltage		V_{GSS}	±30	V
Continuous Drain Current		I_D	10	A
Pulsed Drain Current (Note 2)		I_{DM}	30	A
Avalanche Energy	Single Pulsed (Note 3)	E_{AS}	800	mJ
Peak Diode Recovery dv/dt (Note 4)		dv/dt	2.1	V/ns
Power Dissipation	TO-220/TO-262 TO-263	P_D	135	W
	TO-220F/TO-220F1 TO-220F2		38	W
	TO-251/TO-252		55	W
Junction Temperature		T_J	+150	°C
Storage Temperature		T_{STG}	-55 ~ +150	°C

Notes: 1. Absolute maximum ratings are those values beyond which the device could be permanently damaged. Absolute maximum ratings are stress ratings only and functional device operation is not implied.
2. Repetitive Rating: Pulse width limited by maximum junction temperature.
3. L = 100mH, I_{AS} = 4.1A, V_{DD} = 50V, R_G = 25 Ω, Starting T_J = 25°C
4. I_{SD} ≤ 10A, di/dt ≤ 200A/μs, V_{DD} ≤ BV_{DSS}, Starting T_J = 25°C

■ THERMAL DATA

PARAMETER		SYMBOL	RATINGS	UNIT
Junction to Ambient	TO-220/TO-220F TO-220F1/TO-220F2 TO-262/TO-263	θ_{JA}	62.5	°C/W
	TO-252		110	°C/W
Junction to Case	TO-220/TO-262 TO-263	θ_{JC}	0.92	°C/W
	TO-220F/TO-220F1 TO-220F2		3.29	°C/W
	TO-251/TO-252		2.27 (Note)	°C/W

Note: Device mounted on FR-4 substrate PC board, 2oz copper, with 1inch square copper plate.

■ ELECTRICAL CHARACTERISTICS (T_J=25°C, unless otherwise specified)

PARAMETER		SYMBOL	TEST CONDITIONS	MIN	TYP	MAX	UNIT
OFF CHARACTERISTICS							
Drain-Source Breakdown Voltage		BV_{DSS}	V_{GS}=0V, I_D=250μA	650			V
Drain-Source Leakage Current		I_{DSS}	V_{DS}=650V, V_{GS}=0V			10	μA
Gate- Source Leakage Current	Forward	I_{GSS}	V_{GS}=30V, V_{DS}=0V			100	nA
	Reverse		V_{GS}=-30V, V_{DS}=0V			-100	nA
ON CHARACTERISTICS							
Gate Threshold Voltage		$V_{GS(TH)}$	V_{DS}=V_{GS}, I_D=250μA	2.0		4.0	V
Static Drain-Source On-State Resistance		$R_{DS(ON)}$	V_{GS}=10V, I_D=5.0A			1.0	Ω
DYNAMIC CHARACTERISTICS							
Input Capacitance		C_{ISS}	V_{DS}=25V, V_{GS}=0V, f=1.0MHz		1300		pF
Output Capacitance		C_{OSS}			124		pF
Reverse Transfer Capacitance		C_{RSS}			9.3		pF
SWITCHING CHARACTERISTICS							
Total Gate Charge (Note 1)		Q_G	V_{DS}=520V, V_{GS}=10V, I_D=10A I_G=1mA (Note 1, 2)		31		nC
Gate-Source Charge		Q_{GS}			7.6		nC
Gate-Drain Charge		Q_{GD}			5.8		nC
Turn-On Delay Time (Note 1)		$t_{D(ON)}$	V_{DS}=100V, V_{GS}=10V, I_D=10A, R_G=25Ω (Note 1, 2)		20		ns
Turn-On Rise Time		t_R			21		ns
Turn-Off Delay Time		$t_{D(OFF)}$			98		ns
Turn-Off Fall Time		t_F			35		ns
DRAIN-SOURCE DIODE CHARACTERISTICS AND MAXIMUM RATINGS							
Drain-Source Diode Forward Voltage (Note 1)		V_{SD}	I_S=10A , V_{GS}=0V			1.4	V
Reverse Recovery Time (Note 1)		t_{rr}	I_S=10A , V_{GS}=0V di/dt=100A/μs		376		ns
Reverse Recovery Charge		Q_{rr}			8.5		μC

Notes: 1. Pulse Test: Pulse width ≤ 300μs, Duty cycle ≤ 2%.
2. Essentially independent of operating temperature.

■ TEST CIRCUITS AND WAVEFORMS

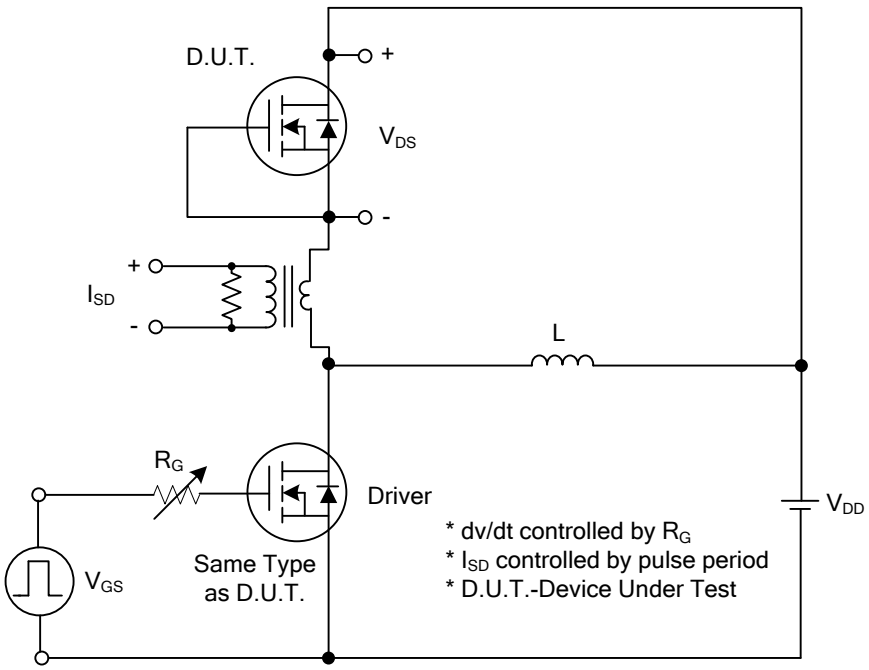

Peak Diode Recovery dv/dt Test Circuit

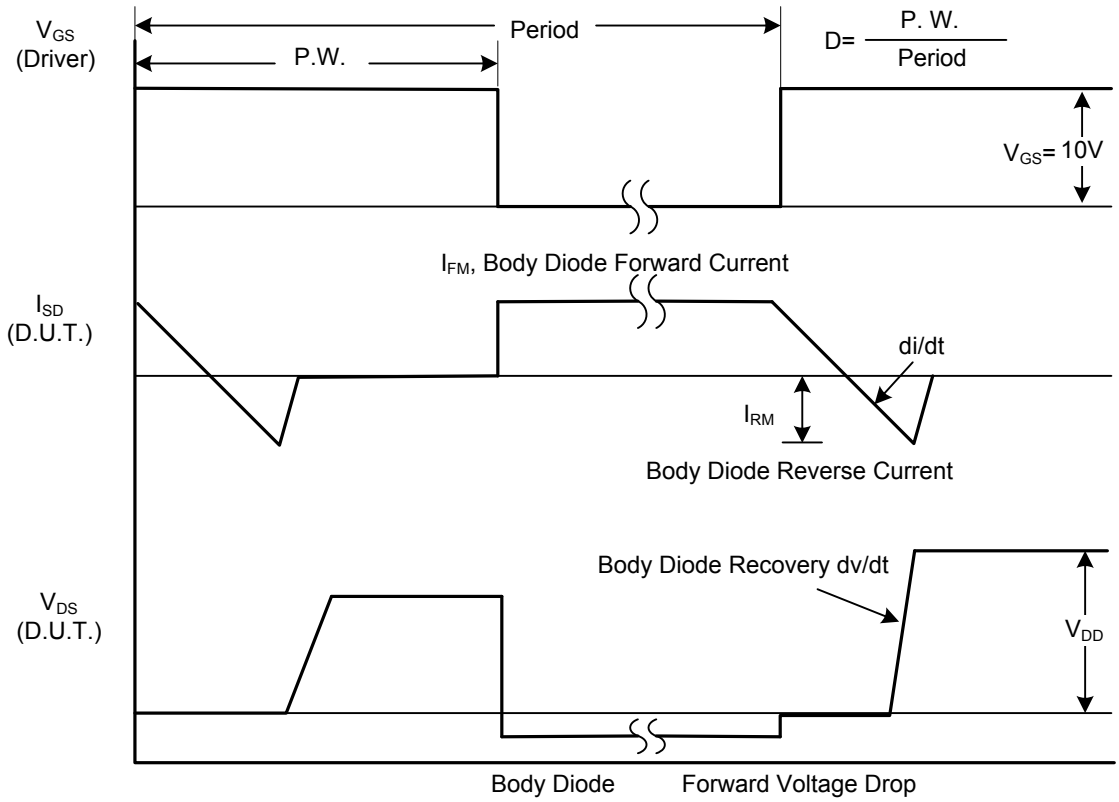

Peak Diode Recovery dv/dt Waveforms

■ TEST CIRCUITS AND WAVEFORMS

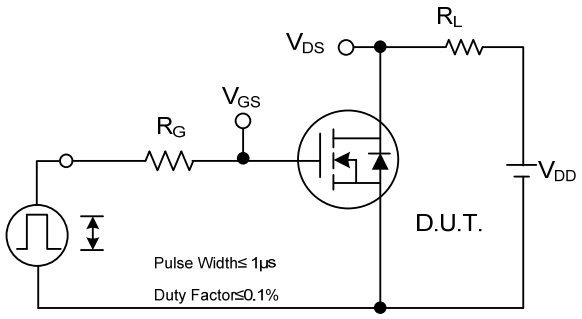

Switching Test Circuit

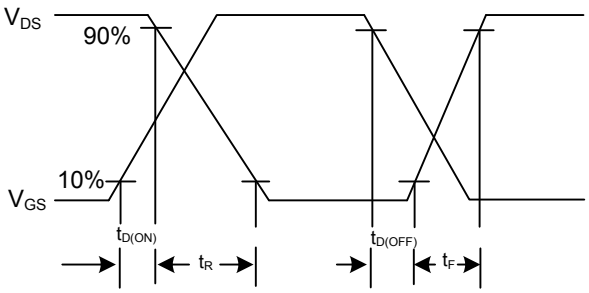

Switching Waveforms

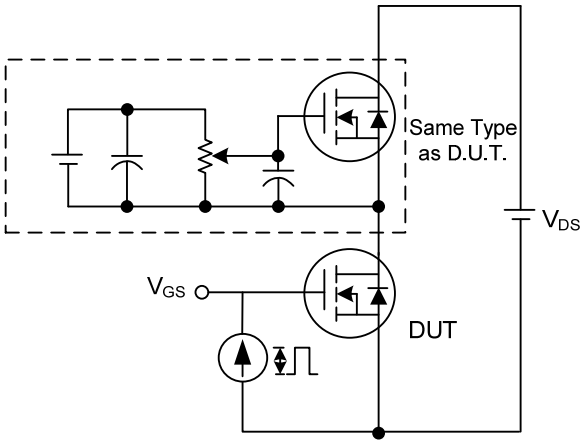

Gate Charge Test Circuit

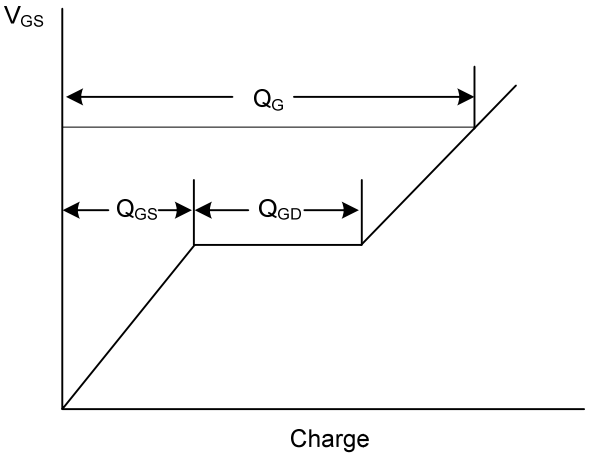

Gate Charge Waveform

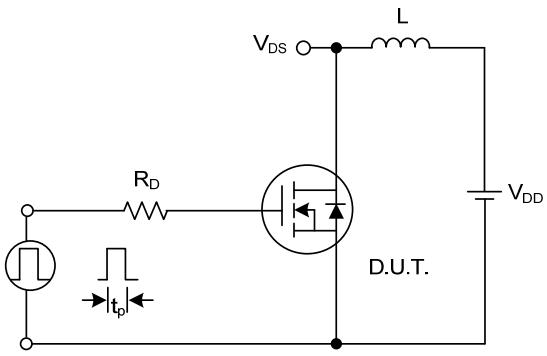

Unclamped Inductive Switching Test Circuit

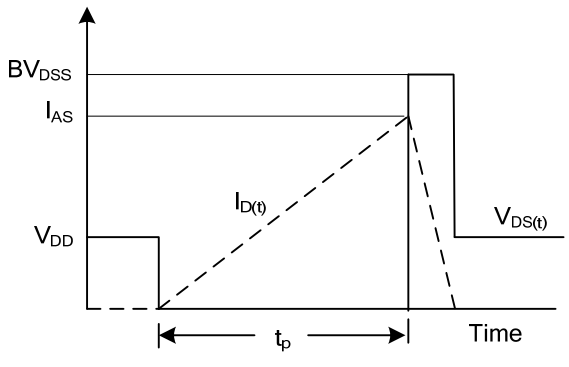

Unclamped Inductive Switching Waveforms

■ TYPICAL CHARACTERISTICS

Drain Current vs. Drain-Source Voltage

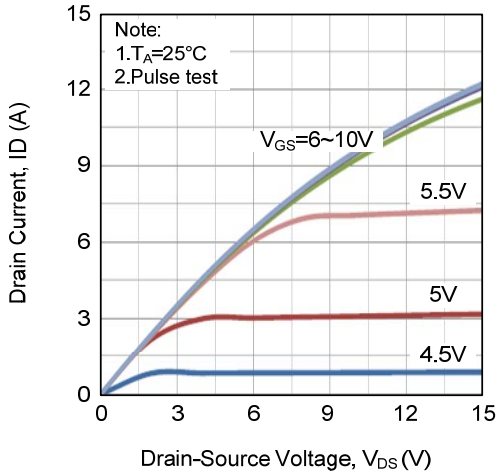

Drain-Source On-Resistance vs. Gate-Source Voltage

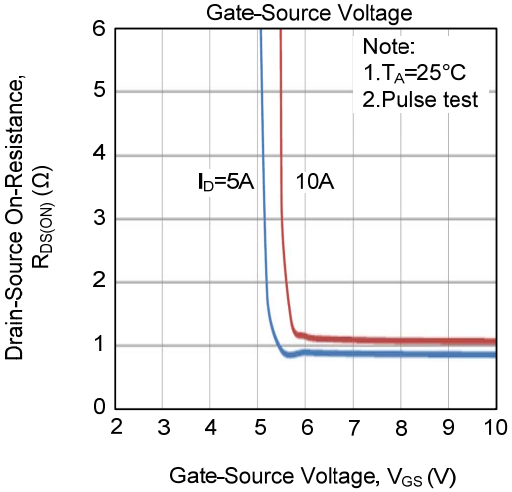

Gate Charge Characteristics

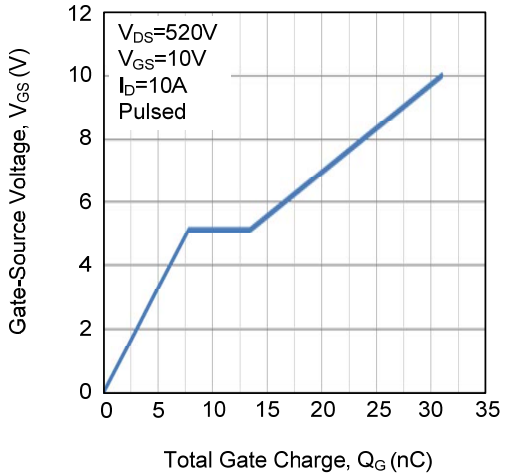

Capacitance Characteristics

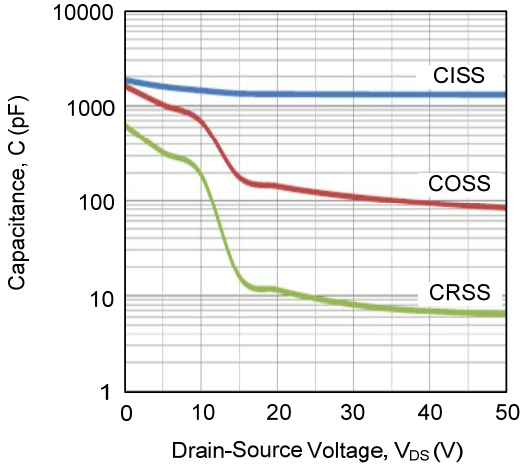

Drain-Source On-Resistance vs. Junction Temperature

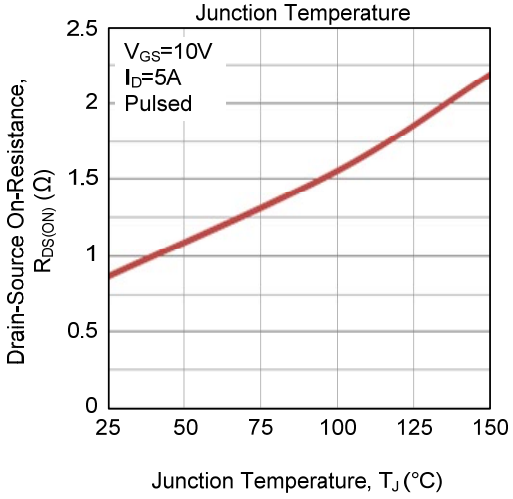

Breakdown Voltage vs. Junction Temperature

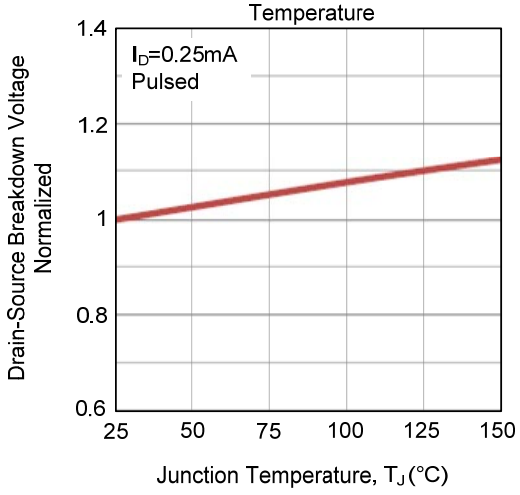

■ TYPICAL CHARACTERISTICS (Cont.)

Gate Threshold Voltage vs. Junction Temperature

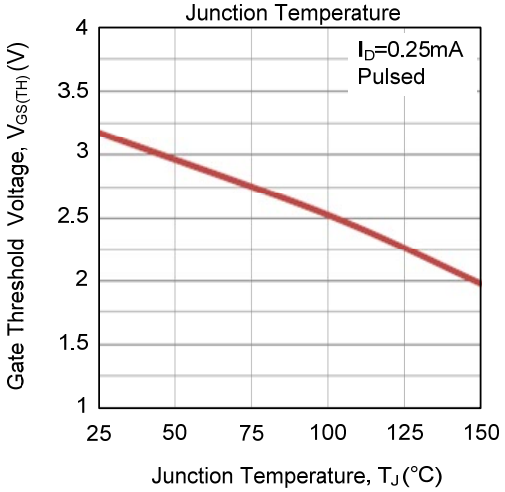

Source Current vs. Source-Drain Voltage

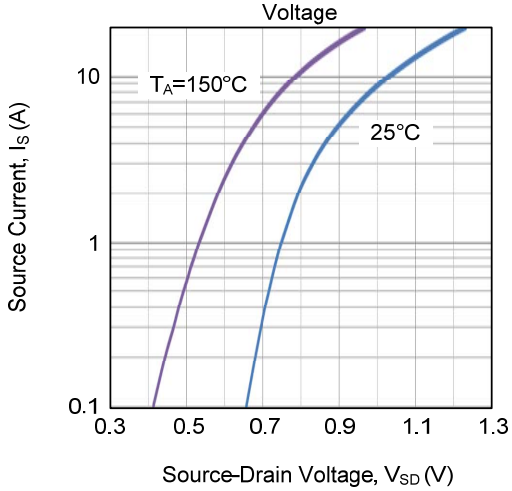

Drain Current vs. Gate-Source Voltage

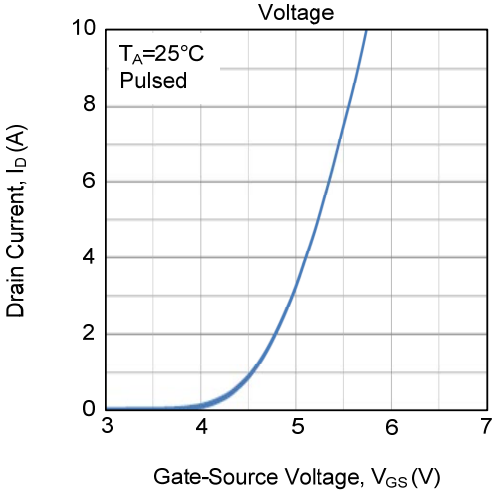

Drain-Source On-Resistance vs. Drain Current

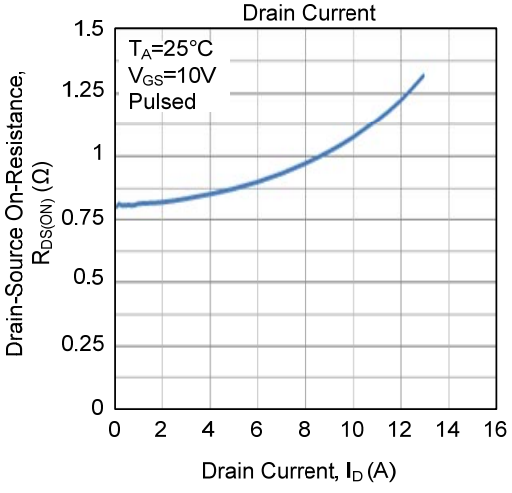

Power Dissipation vs. Junction Temperature

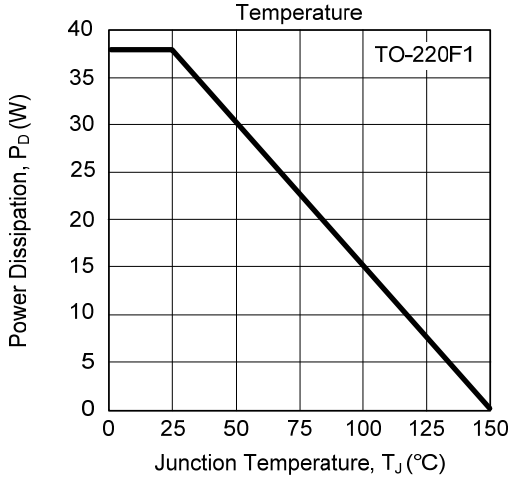

Drain Current vs. Junction Temperature

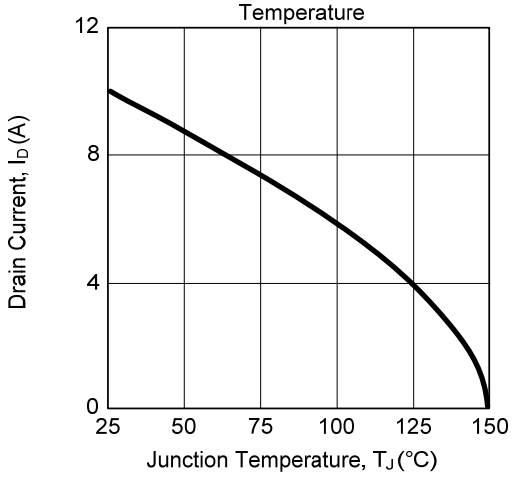

■ TYPICAL CHARACTERISTICS (Cont.)

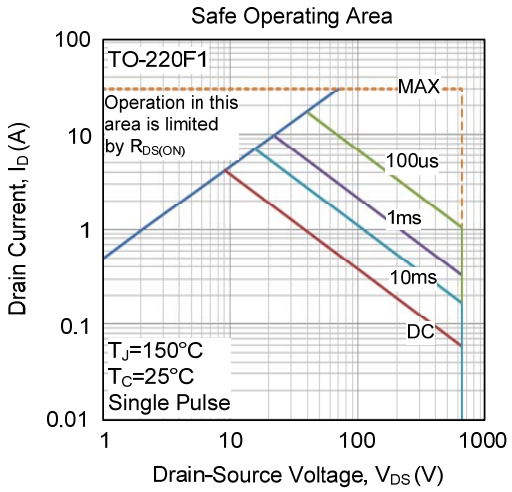

UTC assumes no responsibility for equipment failures that result from using products at values that exceed, even momentarily, rated values (such as maximum ratings, operating condition ranges, or other parameters) listed in products specifications of any and all UTC products described or contained herein. UTC products are not designed for use in life support appliances, devices or systems where malfunction of these products can be reasonably expected to result in personal injury. Reproduction in whole or in part is prohibited without the prior written consent of the copyright owner. UTC reserves the right to make changes to information published in this document, including without limitation specifications and product descriptions, at any time and without notice. This document supersedes and replaces all information supplied prior to the publication hereof.

ENTEGRECİ

Bu belge www.entegreci.com üzerinden sunulmaktadır.

Elektronik komponent tedarikinde Entegreci

Entegreci, Eskişehir merkezli, Türkiye geneline satış yapan bir elektronik komponent mağazasıdır. Entegreler (IC), mikrodenetleyiciler, transistörler, diyotlar, pasif elemanlar, konnektörler, modüller ve geliştirme kartları tek adetten seri üretim adetlerine kadar satılır. Ürün sayfalarında güncel stok durumunu, fiyatı ve datasheet bağlantısını bulabilirsiniz.

Parça koduyla arama

Üretici parça numarasını yazın; stok ve fiyatı hemen görün.

www.entegreci.com

Ürün kategorileri

Entegreden kapasitöre tüm elektronik komponent kategorileri.

Kategorilere göz atın

Üreticiler

Aradığınız üreticinin ürünlerini tek sayfada inceleyin.

Üreticileri görün

Toplu alım ve teklif

Listede olmayan ya da yüksek adetli parçalar için teklif isteyin.

Teklif isteyin

www.entegreci.com | **destek@entegreci.com** | **0850 305 90 34**

Entegreci is an online electronic components store based in Türkiye. Search by manufacturer part number to see stock, prices and datasheets for integrated circuits, microcontrollers, transistors, passive components and connectors, or request a quote for parts that are not listed.

Bu sayfa Entegreci tarafından eklenmiştir. Belgenin önceki sayfaları asıl yayıncısına aittir ve içeriği değiştirilmemiştir; en güncel sürüm için belgenin yayıncısına başvurun.